Low Voltage
Catalogue | 2015

Compact NSX

Moulded-case circuit breakers and switch-disconnectors
Measurement and communication
from 100 to 630 A - up to 690 V



www.electroshaili.com | Electro Shaili الکتروشایلی
Schneider Electric
استعلام آنی (۱۰ خط) ۰۲۱-۹۲۰۰۶۶۱۷



www.electroshaili.com | Electro Shaili الکتروشایلی

استعلام آنی (۱۰ خط) ۰۲۱-۹۲۰۰۶۶۱۷

Intelligent outlook

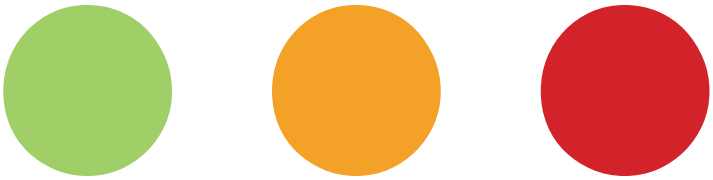

Compact NSX
Next-generation circuit breakers

The Compact™ range of circuit breakers set tomorrow's standards today and help exacting organisations achieve more from their LV infrastructure. An extended breaking capacity, the highest in its class, is available across the entire Compact NSX range.

A power monitoring unit also enhances their outstanding protective functions. For the first time, users can monitor both energy and power, offering new performance in a remarkably compact device.

www.electroshaili.com | Electro Shaili الکتروشایلی
استعلام آنی (۱۰ خط) ۰۲۱-۹۲۰۰۶۶۱۷

Combine safety

The Compact NSX range is innovative - it incorporates monitoring and

Expert technology

A roto-active contact breaking principle provides better limitation and endurance performance:

> Very high breaking capacity in a very small device.

> Exceptional fault current limitation for extended system life.

Reduced installation costs

Achieve up to 30 % savings:

> Total discrimination is ensured particulary in the case of miniature circuit breakers for considerable savings at the time of installation.

> Smaller devices mean more economical switchboards for a significant impact on overall cost of installation - no need for over-calibration.

Enhanced protection for motors

The Compact NSX range meets the requirements of IEC 60947-4-1 standards for protection of motors:

> Well adapted to motor-starting solutions up to 315 kW at 400 V, providing protection against short circuits, overloads, phase unbalance, and phase loss.

> Set up additional protection systems for starting and braking with the motor running, reverse braking, jogging, or reversing in complete safety.

> Used in conjunction with a Schneider Electric contactor, the Compact NSX provides Type II coordination for motor applications.

ASIC

Electronics (ASIC), independent of measurement, manage protection functions.
The high degree of integration in electronics guarantees protection against conducted or radiated interference

Tested low voltage switchboards, IEC 61439-1&2 compliant.



Compact NSX circuit breakers in Prisma P and Prisma G, a complete system of safe switchboards, prefabricated and modular.

www.electroshaili.com | Electro Shaili الکتروشایلی
استعلام آنی (۱۰ خط) ۰۲۱-۹۲۰۰۶۶۱۷

and performance

communication functions, from 40 A upward, combined with impeccable protection.

New breaking capacities

New performance levels improve application targeting:

- 36 kA - Standard low short-circuit level applications, e.g., in service businesses.
- 50 kA - Standard applications (industrial plants, buildings, and hospitals).
- 70-100 kA - High performance at controlled cost.
- 150 kA - Marine ready, with an Ics rating meeting IACS requirements for emergency, essential, and MCC loads.
- 200 kA at up to 440 V - Industry-leading breaking capacity for high-density applications in oil and gas extraction and processing, mining operations, metals and minerals production, and data centres.
- 100 kA from 500 to 690 V - The world's highest rated breaking capacity for the most demanding electrical environments, and ideal for high-efficiency, cost-effective 690 V systems.



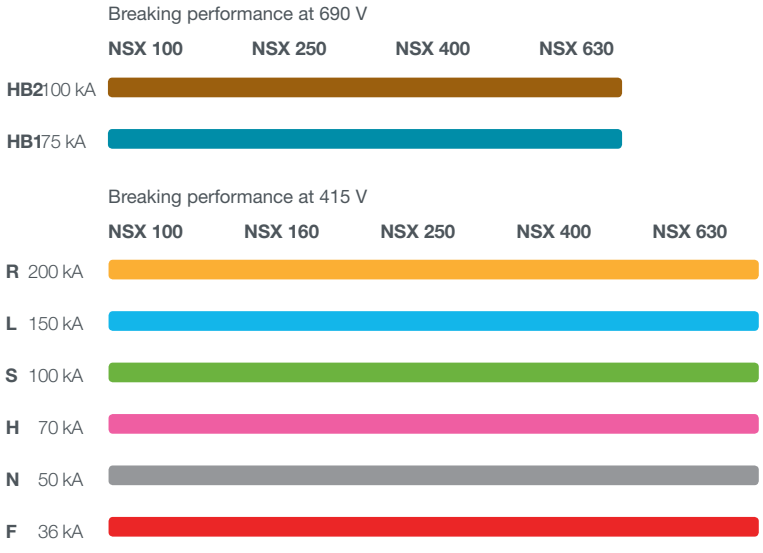

www.electroshaili.com | Electro Shaili الکتروشایلی
استعلام آنی (۱۰ خط) ۰۲۱-۹۲۰۰۶۶۱۷

Opt for service continuity

The Compact NSX range provides exceptional discrimination that minimises the impact of short circuits and ensures maximum service continuity.

Discrimination

Schneider Electric leverages over 30 years of experience and expertise in discrimination to ensure customers of maximum service continuity:

> The downstream circuit breaker trips as close as possible to the
> fault, so that the upstream circuit breaker is not overloaded.

100%
Service continuity

Total service continuity

The Compact NSX range offers innovative capabilities to ensure maximum continuity and uptime for your facilities:

> R, HB1, and HB2 high breaking capacity levels enable the circuit breakers to withstand demanding fault conditions, staying reliably in service after 3 faults. After a fault is cleared, remote control reclosing functionality puts circuits back into operation quickly.

> SDTAM module allows remote indication of motor overloads and actuation of a contact switch. The SDTAM switches the contact instead of tripping the circuit breaker. The module allows for machine restart directly from the contact switch without having to operate circuit breakers.



Preventive maintenance

Maintenance indicators provide information on the number of operations, level of wear on contacts, and total load rates. Maintenance is now preventive, avoiding faults..



www.electroshaili.com | Electro Shaili الکتروشایلی
استعلام آنی (۱۰ خط) ۰۲۱-۹۲۰۰۶۶۱۷

Added simplicity

The Compact NSX range incorporates the same principles of easy installation and use that made its predecessor so successful, and takes these to a higher level.





65%

time savings in installation compared with a classic monitoring solution



The green 'Ready' LED flashes to show that all is well



LTS installation system



Transparent protective cover

Simple in design

> Installers mount and wire Compact NSX in the same way as Compact NS, which makes engineering for a retrofit or extension simple.

> Design is simplified using support software that helps you with parameter settings and planning switchboard installation.

Simple to install

> A Limited Torque Screw (LTS) system ensures proper installation of the tripping device for added flexibility.

> A transparent sealed flap protects access to tripping device switches and prevents settings from being changed.

> New electrical control adjustment also has a transparent sealable cover to prevent it from being operated accidentally.

> Pre-wired connectivity and plug-and-play interface modules allow for easy integration with communication networking.

> Prisma switchboards are set up in functional units, for clearly identified functions and legible wiring, and offer full access for fast connections and intuitive maintenance.

Simple to use

> Users customise alarms for all parameters, assign them to indicator lights, choose display priorities, and configure time delay thresholds and modes.

> A wealth of information, including continuously-activated event logs and tables, helps you ensure that the installed equipment base is operating correctly and that settings are optimised.

www.electroshaili.com | Electro Shaili الکتروشایلی
استعلام‌آنی (۱۰ خط) ۰۲۱-۹۲۰۰۶۶۱۷

Energy management has never been simpler

Simple-to-install Smart Panels connect your building to real savings in 3 steps

Smart Panels digitized by Enerlin'X



1 Measure

Embedded and stand-alone metering & control capabilities

2 Connect

> Integrated communication interfaces
> Ready to connect to energy management platforms

3 Save

> Data-driven energy efficiency actions
> Real time monitoring and control
> Access to energy and site information through on-line services



Smart Panels connect you to energy savings

www.electroshaili.com | Electro Shaili الکتروشایلی

استعلام آنی (۱۰ خط) ۰۲۱-۹۲۰۰۶۶۱۷



1 MEASURE

"Smart Panels" mean visible information

Grouping most of the electrical protection, command and metering components, the switchboards are now significant sources of data locally displayed and sent via communication networks.

2 CONNECT

... and ready to be linked to expertise

Smart Panels use reliable, simple to install and use displays, and Ethernet and Modbus interfaces on the Enerlin'X communication system.

Information is safely transmitted through the most efficient networks:

- Modbus SL inside switchboards, between components
- Ethernet, on cable or WiFi, inside the building and connecting switchboards, computers,
- Ethernet on DSL or GPRS, for access to on-line services by Schneider Electric.

Energy experts, wherever they are, are now able to provide advises based on permanently updated data of the building.

3 SAVE



On-site real time monitoring and control

On a touch screen display connected to Ethernet

- shows essential electrical information and alarms concerning the electrical network,
- allows control (open, close, reset…) of various equipments.

This touch screen is well appreciated for real time value checking and control, directly on the front panel of the main switchboard.

On a PC display with common browser

- shows monitoring web pages hosted into the local Ethernet interface,
- alarm events generate automatic email notifications,
- allows control (open, close, reset…) of various equipments.

Data displayed on graphics or recorded into files are of a great interest for optimising the use of energy in the building.

As an example, they definitely help validating the change of temperature settings, time scheduling in a Building Management System or other automated devices.

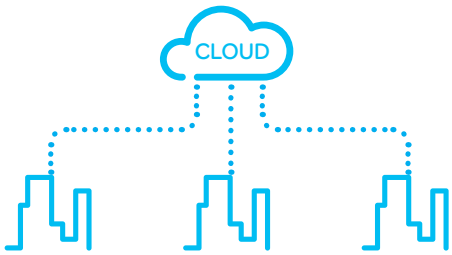

On-line Energy Management services

StruXureWare Energy Operation automates data collection via an open, scalable, and secure energy management information system.

With the help of the Schneider Electric energy management services team, data is then turned into actionable information to enable customers to understand their facilities' performance on an ongoing basis.

Energy Operation leverages companies' current investments in their existing systems, and can be used to communicate advanced results and performance to a broad audience for a shared understanding throughout an organisation.

Choose the expertise of Schneider Electric

Whether in buildings, factories or mission-critical infrastructures, Schneider Electric commits to helping you reduce energy costs and CO_2 emissions. We offer products, solutions, and services that integrate with all levels of the energy value chain.

Solutions adapted to all needs

Through flexible solutions for commercial and industrial buildings, Schneider Electric commits to help customers gradually move towards an active approach to their energy efficiency. We help you get more return from investments and future design solutions.

up to
30%
savings in energy costs

Energy performance contracts

Schneider Electric offers innovative service to modernise technical installations. Our objective is: to dramatically reduce energy costs, whilst improving comfort and safety, all in an environmentally friendly way.

4 steps

> Diagnosis
> Proposals
> Implementation
> Follow-up

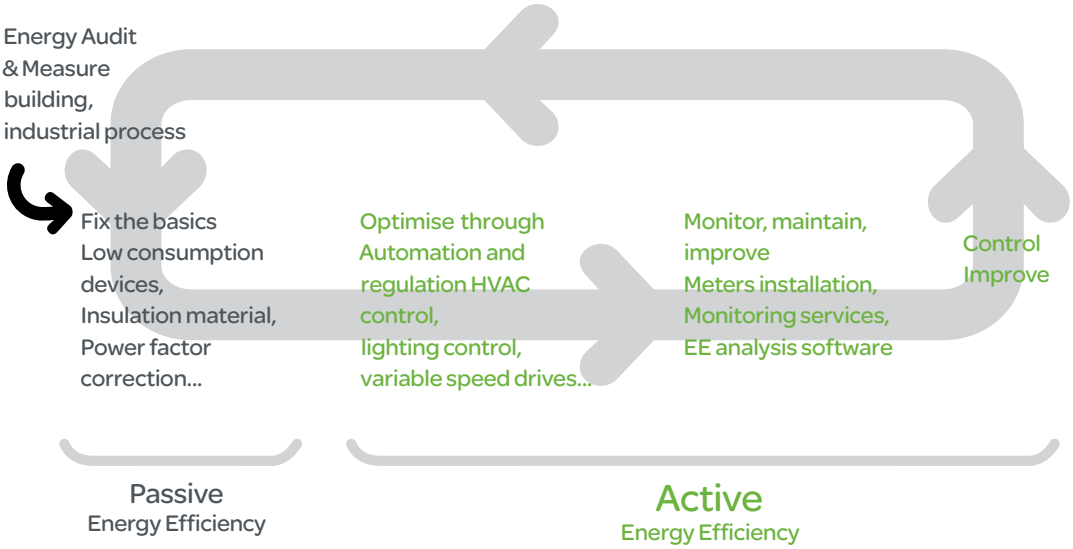

Environmentally responsible

Compact NSX circuit breakers are part and parcel of the Schneider Electric energy efficiency approach. Designed for easy disassembly and recycling at end of life, Compact NSX complies with environmental directives RoHS* and WEEE**, and with ISO 14001 standards, thanks to non-polluting factories.

* RoHS = Restriction of Hazardous Substances
** WEEE = Waste Electrical and Electronic Equipment

www.electroshaili.com | Electro Shaili الکتروشایلی
استعلام آنی (۱۰ خط) ۰۲۱-۹۲۰۰۶۶۱۷

General contents

Presentation 2


Functions and characteristics A-1


Installation recommendations B-1


Dimensions and connections C-1


Wiring diagrams D-1


Additional characteristics E-1


Glossary G-1

www.electroshaili.com | Electro Shaili الکتروشایلی

استعلام آنی (۱۰ خط) ۰۲۱-۹۲۰۰۶۶۱۷

Compact NSX
Overview of applications and functions

Applications

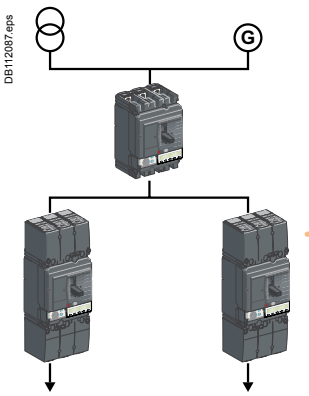

Protection of distribution systems (AC 220/690 V)
> page A-16
> page A-66

Compact NSX devices are equipped with MA or TM thermal-magnetic trip units or Micrologic 2 / 5 / 6 electronic trip units to provide protection against short-circuits and overloads for:
- distribution systems supplied by transformers
- distribution systems supplied by engine generator sets
- long cables in IT and TN systems.

They can be easily installed at all levels in distribution systems, from the main LV switchboard to the subdistribution boards and enclosures.
All Compact NSX devices can protect against insulation faults by adding a Vigi module or Vigirex relay.

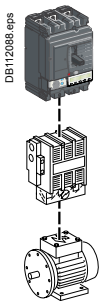

Protection of motors (AC 220/690 V)
> page A-46

The Compact NSX range includes a number of versions to protect motor applications:
- basic short-circuit protection with MA magnetic trip units or the electronic Micrologic 1-M version, combined with an external relay to provide thermal protection
- protection against overloads, short-circuits and phase unbalance or loss with Micrologic 2-M trip units
- more complete protection against overloads and short-circuits with additional motor-specific protection (phase unbalance, locked rotor, underload and long start) with Micrologic 6 E-M trip units. These versions also offer communication, metering and operating assistance.

The exceptional limiting capacity of Compact NSX circuit breakers automatically provides type-2 coordination with the motor starter, in compliance with standard IEC 60947-4-1.

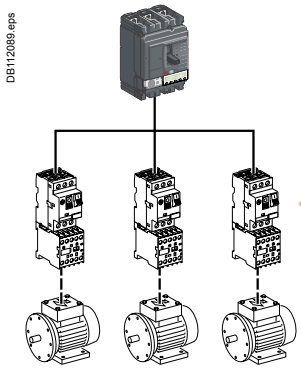

Protection of special applications
> page A-58

Special applications :
The Compact NSX range offers a number of versions for special protection applications:
- service connection to public distribution systems > A-58
- generators > A-60
- industrial control panels > A-62 with:
  - compliance with international standards IEC 60947-2 and UL 508 / CSA 22-2 N14
  - compliance with US standard UL 489
  - installation in universal and functional enclosures.
- 16 Hz 2/3 systems > A-63
- 400 Hz systems > A-64.

For all these applications, circuit breakers in the Compact NSX range offer positive contact indication and are suitable for isolation in accordance with standards IEC 60947-1 and 2.

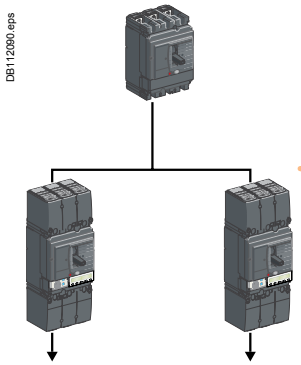

Control and isolation using switch-disconnectors
> page A-68

A switch-disconnector version of Compact NSX circuit breakers is available for circuit control and isolation.
All add-on functions of Compact NSX circuit breakers may be combined with the basic switch-disconnector function, including:
- earth-leakage protection
- motor mechanism
- ammeter, etc.

For information on other switch-disconnector ranges, see the Compact INS/INV (offering positive contact indication and visible break) and Fupact (fusegear) catalogues.

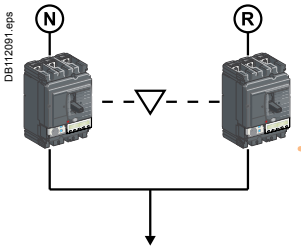

Source changeover systems
> page A-72

To ensure a continuous supply of power, some electrical installations are connected to two power sources:
- a normal source
- a replacement source to supply the installation when the normal source is not available.

A mechanical and/or electrical interlocking system between two circuit breakers or switch-disconnectors avoids all risk of parallel connection of the sources during switching.
A source-changeover system can be:
- manual with mechanical device interlocking
- remote controlled with mechanical and/or electrical device interlocking
- automatic by adding a controller to manage switching from one source to the other on the basis of external parameters.

Functions

Compact NSX100 to 630 offers high performance and a wide range of interchangeable trip units to protect most applications. Electronic versions provide highly accurate protection with wide setting ranges and can integrate measurement, metering and communication functions. They can be combined with the FDM switchboard display unit to provide all the functions of a Power Meter as well as operating assistance.

Circuit breakers and switch-disconnectors

> page A-6

PB105112.eps



PB108166.eps



- Ratings:
  - Compact NSX100 to 250 A
  - Compact NSX400 to 630 A.
- Circuit breakers type B, F, N, M, H, S, L, R, HB1, HB2.
- 2, 3 or 4 poles.
- Molded case circuit breaker

Micrologic control units

> page A-18

PB103365.eps



Micrologic 1.3 and 2
- Electronic protection.
- Indications (local and remote).

Micrologic 5/6 A or E
- Electronic protection.
- Display of type of fault.
- Indications (local and remote).
- Measurements.

Power meter functions

> page A-22

PB103360.eps



Compact NSX equipped with Micrologic 5 / 6 trip units offer type A (ammeter) or E (energy) metering functions as well as communication. Using Micrologic sensors and intelligence, Compact NSX provides access to measurements of all the main electrical parameters on the built-in screen, on a dedicated FDM display unit or via the communication system.

PB111801-19_r.eps



Operating assistance functions

> page A-24

Integration of measurement functions provides operators with operating assistance functions including alarms tripped by user-selected measurement values, time-stamped event tables and histories, and maintenance indicators.

Switchboard display unit functions

> page A-26

The main measurements can be read on the built-in screen of Micrologic 5 / 6 trip units.
They can also be displayed on the FDM switchboard display unit along with pop-up windows signalling the main alarms.

Communication

> page A-34

screen 2b.eps



Compact NSX equipped with Micrologic provide communication capabilities. Simple RJ45 cords connect to a Modbus interface module.
- IFM: Modbus interface module.
- IFE: Ethernet interface module.
- I/O application module.
- Electrical Asset Manager.

DB416829.eps



DB416830.eps



PB103798_9.eps



Protection, measurement and communication...



Functions and characteristics

Introduction
General characteristics of the Compact NSX range A-2
Characteristics and performance of Compact NSX circuit breakers from 100 to 250 A up to 690 V A-4
Characteristics and performance of Compact NSX circuit breakers from 400 to 630 A up to 690 V A-8
Compact NSX trip units A-10
Overview of trip units for Compact NSX A-12

Protection of distribution systems up to 415 V applications
TM thermal-magnetic and MA magnetic trip units A-16
Micrologic 2 and 1.3 M trip units A-18
Micrologic 5 / 6 A or E trip units A-20

Power Meter functions
Electronic Micrologic 5 / 6 A or E A-22

Operating-assistance functions
Micrologic 5 / 6 A or E trip units A-24

Switchboard-display functions
Micrologic A/E/P/H control unit with COM option (BCM ULP) A-26
Micrologic A/E/P/H control unit with COM Ethernet gateway A-28

Enerlin'X communication system
Products overview A-30

Communication
Communication wiring system A-32
Overview of functions A-33

IFE Ethernet interface A-34

IFM Modbus communication interface A-36

I/O application module
Communications modules, IFM and IFE A-40
Communication components and connections A-41

Electrical Asset Manager Configuration Engineering tool A-42

Accessories for Micrologic trip units A-44

Earth-leakage protection
Add-on protection against insulation faults using a Vigi module or Vigirex relay A-46

Motor protection
General information on motor feeders A-48
Motor-feeder characteristics and solutions A-50
Compact NSX motor-feeder solutions A-51
MA and Micrologic 1.3 M instantaneous trip units A-52
Micrologic 2.2 / 2.3 M electronic trip units A-54
Micrologic 6 E-M electronic trip units A-56

Special applications
Protection of public distribution systems with Micrologic 2-AB A-60
Generator protection with Micrologic 2.2 G A-62
Protection of industrial control panels A-64
16 Hz 2/3 network protection - Micrologic 5 A-Z trip unit A-65
Protection of 400 Hz systems A-66
Protection of 440 – 690 V applications A-68
Characteristics and performance of Compact NSX circuit breakers from 100 to 630 A A-69

Switch-disconnectors
Overview of applications A-70
Switch-disconnector functions A-71
Characteristics and performance of Compact NSX switch-disconnectors from 100 to 630 NA A-72

Source-changeover systems
Presentation A-74
Manual source-changeover systems A-75
Mechanical and electrical interlocking for source-changeover systems A-76
Automatic source-changeover systems with controller A-77

Accessories and auxiliaries
Overview of Compact NSX100 to 630 fixed version A-78
Overview of Compact NSX100 to 630 plug-in and withdrawable versions A-80
Device installation A-82
Connection of fixed devices A-84
Connection of withdrawable and plug-in devices A-86
Insulation of live parts A-87
Selection of auxiliaries for Compact NSX100/160/250 A-88
Selection of auxiliaries for Compact NSX400/630 A-90
Connection of electrical auxiliaries A-92
Indication contacts A-94
SDx and SDTAM modules for Micrologic A-95
Motor mechanism A-96
Remote tripping A-97
Rotary handles A-98
Additional measurement and indication modules A-100
Locks A-102
Sealing accessories A-103
Individual enclosures A-104
Escutcheons and protection collars A-105

Presentation
> 2

Installation recommendations
> B-1

Dimensions and connections
> C-1

Wiring diagrams
> D-1

Additional characteristics
> E-1

Glossary
> G-1

Introduction
General characteristics of the Compact NSX range

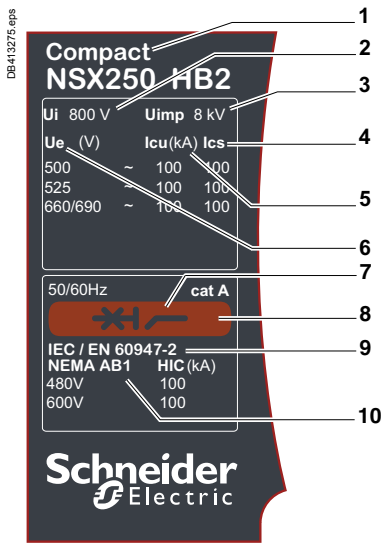

Standardised characteristics indicated on the rating plate:
1 *Type of device: frame size and breaking capacity class*
2 *Ui: rated insulation voltage.*
3 *Uimp: rated impulse withstand voltage.*
4 *Ics: service breaking capacity.*
5 *Icu: ultimate breaking capacity for various values of the rated operational voltage Ue*
6 *Ue: operational voltage.*
7 *Colour label indicating the breaking capacity class.*
8 *Circuit breaker-disconnector symbol.*
9 *Reference standard.*
10 *Main standards with which the device complies.*
Note*: when the circuit breaker is equipped with an extended rotary handle, the door must be opened to access the rating plate.*

Compliance with standards
Compact NSX circuit breakers and auxiliaries comply with the following:
■ international recommendations:
□ IEC 60947-1: general rules
□ IEC 60947-2: circuit breakers
□ IEC 60947-3: switch-disconnectors
□ IEC 60947-4: contactors and motor starters
□ IEC 60947-5.1 and following: control circuit devices and switching elements; automatic control components
■ European (EN 60947-1 and EN 60947-2) and corresponding national standards:
□ France NF
□ Germany VDE
□ United Kingdom BS
□ Australia AS
□ Italy CEI
■ the specifications of the marine classification companies (Veritas, Lloyd's Register of Shipping, Det Norske Veritas, etc.), standard NF C 79-130 and recommendations issued by the CNOMO organisation for the protection of machine tools.
For U.S. UL, Canadian CSA, Mexican NOM and Japanese JIS standards, please consult us.

Pollution degree
Compact NSX circuit breakers are certified for operation in pollution-degree 3 environments as defined by IEC standards 60947-1 and 60664-1 (industrial environments).

Climatic withstand
Compact NSX circuit breakers have successfully passed the tests defined by the following standards for extreme atmospheric conditions:
■ IEC 60068-2-1: dry cold (-55 °C)
■ IEC 60068-2-2: dry heat (+85 °C)
■ IEC 60068-2-30: damp heat (95 % relative humidity at 55 °C)
■ IEC 60068-2-52 severity level 2: salt mist.

Environment
Compact NSX respects the European environment directive EC/2002/95 concerning the restriction of hazardous substances (RoHS).
Product environment profiles (PEP) have been prepared, describing the environmental impact of every product throughout its life cycle, from production to the end of its service life.
All Compact NSX production sites have set up an environmental management system certified ISO 14001.
Each factory monitors the impact of its production processes. Every effort is made to prevent pollution and to reduce consumption of natural resources.

Ambient temperature
■ Compact NSX circuit breakers may be used between -25 °C and +70 °C. For temperatures higher than 40 °C (65 °C for circuit breakers used to protect motor feeders), devices must be derated (pages B-8 and B-9).
■ Circuit breakers should be put into service under normal ambient, operating-temperature conditions. Exceptionally, the circuit breaker may be put into service when the ambient temperature is between -35 °C and -25 °C.
■ The permissible storage-temperature range for Compact NSX circuit breakers in the original packing is -50 °C (1) and +85 °C.

(1) -40 °C for Micrologic control units with an LCD screen.

Electromagnetic compatibility

Compact NSX devices are protected against:
- overvoltages caused by circuit switching (e.g. lighting circuits)
- overvoltages caused by atmospheric disturbances
- devices emitting radio waves such as mobile telephones, radios, walkie-talkies, radar, etc.
- electrostatic discharges produced by users.

Immunity levels for Compact NSX comply with the standards below.
- IEC/EN 60947-2: Low-voltage switchgear and controlgear, part 2: Circuit breakers:
  - Annex F: Immunity tests for circuit breakers with electronic protection
  - Annex B: Immunity tests for residual current protection
- IEC/EN 61000-4-2: Electrostatic-discharge immunity tests
- IEC/EN 61000-4-3: Radiated, radio-frequency, electromagnetic-field immunity tests
- IEC/EN 61000-4-4: Electrical fast transient/burst immunity tests
- IEC/EN 61000-4-5: Surge immunity tests
- IEC/EN 61000-4-6: Immunity tests for conducted disturbances induced by radio-frequency fields
- CISPR 11: Limits and methods of measurement of electromagnetic disturbance characteristics of industrial, scientific and medical (ISM) radio-frequency equipment.

Discrimination

Compact NSX reinforces the discrimination capabilities of the Compact NS range by applying the rapid calculation capacity of the Micrologic trip units.
Total discrimination is now possible between NSX100 and modular Multi 9 circuit breakers rated ⩽ 63 A (see page A-10).

PB108169.eps



DB112093.eps



Suitable for isolation with positive contact indication

All Compact NSX circuit breakers are suitable for isolation as defined in IEC standard 60947-2:
- The isolation position corresponds to the O (OFF) position.
- The operating handle cannot indicate the OFF position unless the contacts are effectively open.
- Padlocks may not be installed unless the contacts are open.

Installation of a rotary handle or a motor mechanism does not alter the reliability of the position-indication system.
The isolation function is certified by tests guaranteeing:
- the mechanical reliability of the position-indication system
- the absence of leakage currents
- overvoltage withstand capacity between upstream and downstream connections.

The tripped position does not insure isolation with positive contact indication.
Only the OFF position guarantees isolation.

Installation in class II switchboards

All Compact NSX circuit breakers are class II front face devices. They may be installed through the door of class II switchboards (as per IEC standards 61140 and 60664-1) without downgrading switchboard insulation. Installation requires no special operations, even when the circuit breaker is equipped with a rotary handle or a motor mechanism.

Degree of protection

The following indications are in accordance with standards IEC 60529 (IP degree of protection) and IEC 62262 (IK protection against external mechanical impacts).

Bare circuit breaker with terminal shields
- With toggle: IP40, IK07.
- With standard direct rotary handle / VDE: IP40 IK07

Circuit breaker installed in a switchboard
- With toggle: IP40, IK07.
- With direct rotary handle:
  - standard / VDE: IP40, IK07
  - MCC: IP43 IK07
  - CNOMO: IP54 IK08
- With extended rotary handle: IP55 IK08
- With motor mechanism: IP40 IK07.

Introduction

Characteristics and performance of Compact NSX circuit breakers from 100 to 250 A up to 690 V

pb107518_15.eps



Compact NSX single-pole.

PB107524_23.eps



Compact NSX two-pole

Compact circuit breakers			
Number of poles			
Control	manual	toggle direct or extended rotary handle	
	electric		
Connections	fixed	front connection rear connection	
	withdrawable	front connection rear connection	
Electrical characteristics as per IEC 60947-2 and EN 60947-2			
Rated current (A)	**In**	40 °C	
Rated insulation voltage (V)	**Ui**		
Rated impulse withstand voltage kV)	**Uimp**		
Rated operational voltage (V)	**Ue**	AC 50/60 Hz DC	
Type of circuit breaker			
Ultimate breaking capacity (kA rms)	**Icu**	AC 50/60 Hz	220/240 V 380/415 V 440 V 500/525 V 660/690 V
		DC	250 V (1P) 500 V (2P)
Service breaking capacity (kA rms)	**Ics**	% Icu	
Suitability for isolation			
Utilisation category			
Durability (C-O cycles)	mechanical		
	electrical	277 V	In/2 In
Electrical characteristics as per NEMA AB1			
Breaking capacity (kA) V AC 50/60 Hz		240 V 277 V 480 V 600 V	
Protection and measurements			
Type of trip units			
Ratings		**In**	
Overload protection (thermal)	long time threshold	**Ir**	
Short-circuit protection (magnetic)	instantaneous pickup	**Im**	value indicated for AC (1) real value for DC
Add-on earth-leakage protection	add-on Vigi module combination with Vigirex relay		
Additional indication and control auxiliaries			
Indication contacts			
Voltages releases	MX shunt release MN undervoltage release		
Installation			
Accessories	terminal extensions and spreaders terminal shields and interphase barriers escutcheons		
Dimensions (mm)	W x H x D		
Weight (kg)			
Source changeover system			
Interlocking systems			

(1) The thresholds for TMD and TMG 1-pole and 2-pole magnetic trip units up to 63 A are indicated for AC. The real DC thresholds are indicated on the following line.

	NSX100									NSX160								NSX250		
	1									1								1		
	■									■								■		
	-									-								-		
	-									-								-		
	■									■								■		
	■									■								■		
	-									-								-		
	-									-								-		
	100									160								250		
	750									750								750		
	8									8								8		
	277									277								277		
	250									250								-		
	N	**M**								**N**	**M**							**N**		
	25	40								25	40							25		
	-	-								-	-							-		
	-	-								-	-							-		
	-	-								-	-							-		
	-	-								-	-							-		
	50	85								50	85							-		
	-	-								-	-							-		
	100 %									100 %								100 %		
	■									■								■		
	A									A								A		
	20000									20000								10000		
	20000									20000								10000		
	10000									10000								5000		
	N	**M**								**N**	**M**							**N**		
	25	40								25	40							25		
	25	40								25	40							25		
	-	-								-	-							-		
	-	-								-	-							-		
	built-in thermal-magnetic									built-in thermal-magnetic								built-in thermal-magnetic		
	16	20	25	30	40	50	63	80	100	125	160							160	200	250
	fixed									fixed								fixed		
	16	20	25	30	40	50	63	80	100	125	160							160	200	250
	fixed									fixed								fixed		
	190	190	300	300	500	500	500	640	800	1000	1250							850	850	850
	260	260	400	400	700	700	700	800	1000	1200	1250							-	-	-
	-									-								-		
	-									-								-		
	-									-								-		
	-									-								-		
	-									-								-		
	■									■								■		
	■									■								■		
	■									■								■		
	35 x 161 x 86									35 x 161 x 86								35 x 161 x 86		
	0.7									0.7								0.7		
	-									-								-		

Introduction

Characteristics and performance of Compact NSX circuit breakers from 100 to 250 A up to 690 V

PB105112.eps



Compact NSX100/160/250.

PB110406_40.eps



Compact NSX250 R.

PB110420_40.eps



Compact NSX250 HB2.

(1) OSN: Over Sized Neutral protection for neutrals carrying high currents (e.g. 3rd harmonics).
(2) ZSI: Zone Selective Interlocking using pilot wires.
(3) Vigi module is not available for breaking capacity levels HB1/HB2.
(4) There is no 160 A frame, use 250 A frame with lower rating trip units for R, HB1, HB2.
(5) 2P circuit breaker in 3P case for B and F types, only with thermal-magnetic trip unit.

Common characteristics

Rated voltages			
Insulation voltage (V)	**Ui**		800
Impulse withstand voltage (kV)	**Uimp**		8
Operational voltage (V)	**Ue**	AC 50/60 Hz	690
Suitability for isolation		IEC/EN 60947-2	yes
Utilisation category			A
Pollution degree		IEC 60664-1	3

Circuit breakers

Breaking capacity levels

Electrical characteristics as per IEC 60947-2

Rated current (A)	**In**	40 °C		
Number of poles				
Breaking capacity (kA rms)				
	Icu	AC 50/60 Hz	220/240 V	
			380/415 V	
			440 V	
			500 V	
			525 V	
			660/690 V	
Service breaking capacity (kA rms)				
	Ics	AC 50/60 Hz	220/240 V	
			380/415 V	
			440 V	
			500 V	
			525 V	
			660/690 V	
Durability (C-O cycles)		Mechanical		
		Electrical	440 V	In/2
				In
			690 V	In/2
				In

Characteristics as per Nema AB1

Breaking capacity (kA rms)	AC 50/60 Hz	240 V	
		480 V	
		600 V	

Characteristics as per UL 508

Breaking capacity (kA rms)	AC 50/60 Hz	240 V	
		480 V	
		600 V	

Protection and measurements

Short-circuit protection	Magnetic only	
Overload / short-circuit protection	Thermal magnetic	
	Electronic	
		with neutral protection (Off-0.5-1-OSN) (1)
		with ground-fault protection
		with zone selective interlocking (ZSI) (2)
Display / I, U, f, P, E, THD measurements / interrupted-current measurement		
Options	Power Meter display on door	
	Operating assistance	
	Counters	
	Histories and alarms	
	Metering Com	
	Device status/control Com	
Earth-leakage protection	By Vigi module (3)	
	By Vigirex relay	

Installation / connections

Dimensions and weights

Dimensions (mm) W x H x D	Fixed, front connections	2/3P
		4P
Weight (kg)	Fixed, front connections	2/3P
		4P

Connections

Connection terminals	Pitch	With/without spreaders
Large Cu or Al cables	Cross-section	mm²

Common characteristics

Control			
	Manual	With toggle	■
		With direct or extended rotary handle	■
	Electrical	With remote control	■
Versions			
	Fixed		■
	Withdrawable	Plug-in base	■
		Chassis	■

NSX100								NSX160 [4]					NSX250						
F	N	H	S	L	R	HB1	HB2	F	N	H	S	L	F	N	H	S	L	R	HB1	HB2
100					**100**			**160**					**250**					**250**		
2 [5], 3, 4					3, 4			2 [5], 3, 4					2 [5], 3, 4					3, 4		
85	90	100	120	150	200	-	-	85	90	100	120	150	85	90	100	120	150	200	-	-
36	50	70	100	150	200	-	-	36	50	70	100	150	36	50	70	100	150	200	-	-
35	50	65	90	130	200	-	-	35	50	65	90	130	35	50	65	90	130	200	-	-
25	36	50	65	70	80	85	100	30	36	50	65	70	30	36	50	65	70	80	85	100
22	35	35	40	50	65	80	100	22	35	35	40	50	22	35	35	40	50	65	80	100
8	10	10	15	20	45	75	100	8	10	10	15	20	8	10	10	15	20	45	75	100
85	90	100	120	150	200	-	-	85	90	100	120	150	85	90	100	120	150	200	-	-
36	50	70	100	150	200	-	-	36	50	70	100	150	36	50	70	100	150	200	-	-
35	50	65	90	130	200	-	-	35	50	65	90	130	35	50	65	90	130	200	-	-
12.5	36	50	65	70	80	85	100	30	36	50	65	70	30	36	50	65	70	80	85	100
11	35	35	40	50	65	80	100	22	35	35	40	50	22	35	35	40	50	65	80	100
4	10	10	15	20	45	75	100	8	10	10	15	20	8	10	10	15	20	45	75	100
50000					20000			40000					20000					20000		
50000					20000			40000					20000					20000		
30000					10000			20000					10000					10000		
20000					10000			15000					10000					10000		
10000					5000			7500					5000					5000		
85	90	100	120	150	200	-	-	85	90	100	120	150	85	90	100	120	150	200	-	-
35	50	65	90	130	150	85	100	35	50	65	90	130	35	50	65	90	130	150	85	100
8	20	35	40	50	50	75	100	20	20	35	40	50	20	20	35	40	50	50	75	100
85	85	85	-	-	-	-	-	85	85	85	-	-	85	85	85	-	-	-	-	-
25	50	65	-	-	-	-	-	35	50	65	-	-	35	50	65	-	-	-	-	-
10	10	10	-	-	-	-	-	10	10	10	-	-	15	15	15	-	-	-	-	-
■								■					■							
■								■					■							
■								■					■							
■								■					■							
■								■					■							
■								■					■							
■								■					■							
■								■					■							
■								■					■							
■								■					■							
■								■					■							
■								■					■							
■								■					■							
■								■					■							
105 x 161 x 86					105 x 161 x 86			105 x 161 x 86					105 x 161 x 86							
140 x 161 x 86					140 x 161 x 86			140 x 161 x 86					140 x 161 x 86							
2.05					2.4			2.2					2.4							
2.4					2.8			2.6					2.8							
35/45 mm					35/45 mm			35/45 mm					35/45 mm							
300					300			300					300							

Introduction

Characteristics and performance of Compact NSX circuit breakers from 400 to 630 A up to 690 V

PB108166.eps



Compact NSX400/630.

PB111001.eps



Compact NSX630 R.

PB111013.eps



Compact NSX630 HB2.

(1) OSN: Over Sized Neutral protection for neutrals carrying high currents (e.g. 3rd harmonics).
(2) ZSI: Zone Selective Interlocking using pilot wires.
(3) Vigi module is not available for breaking capacity levels HB1/HB2.

Common characteristics

Rated voltages			
Insulation voltage (V)	**Ui**		800
Impulse withstand voltage (kV)	**Uimp**		8
Operational voltage (V)	**Ue**	AC 50/60 Hz	690
Suitability for isolation		IEC/EN 60947-2	yes
Utilisation category			A
Pollution degree		IEC 60664-1	3

Circuit breakers

Breaking capacity levels

Electrical characteristics as per IEC 60947-2

Rated current (A)	**In**	40 °C		
Number of poles				
Breaking capacity (kA rms)				
	Icu	AC 50/60 Hz	220/240 V	
			380/415 V	
			440 V	
			500 V	
			525 V	
			660/690 V	
Service breaking capacity (kA rms)				
	Ics	AC 50/60 Hz	220/240 V	
			380/415 V	
			440 V	
			500 V	
			525 V	
			660/690 V	
Durability (C-O cycles)		Mechanical		
		Electrical	440 V	In/2
				In
			690 V	In/2
				In

Characteristics as per Nema AB1

Breaking capacity (kA rms)	AC 50/60 Hz	240 V	
		480 V	
		600 V	

Characteristics as per UL 508

Breaking capacity (kA rms)	AC 50/60 Hz	240 V	
		480 V	
		600 V	

Protection and measurements

Short-circuit protection	Magnetic only	
Overload / short-circuit protection	Thermal magnetic	
	Electronic	
		with neutral protection (Off-0.5-1-OSN) (1)
		with ground-fault protection
		with zone selective interlocking (ZSI) (2)
Display / I, U, f, P, E, THD measurements / interrupted-current measurement		
Options	Power Meter display on door	
	Operating assistance	
	Counters	
	Histories and alarms	
	Metering Com	
	Device status/control Com	
Earth-leakage protection	By Vigi module (3)	
	By Vigirex relay	

Installation / connections

Dimensions and weights

Dimensions (mm) W x H x D	Fixed, front connections	2/3P
		4P
Weight (kg)	Fixed, front connections	2/3P
		4P

Connections

Connection terminals	Pitch	With/without spreaders
Large Cu or Al cables	Cross-section	mm²

Common characteristics

Control			
	Manual	With toggle	■
		With direct or extended rotary handle	■
	Electrical	With remote control	■
Versions			
	Fixed		■
	Withdrawable	Plug-in base	■
		Chassis	■

NSX400							NSX630									
											Ir = 225 - 500 A			Ir = 501 - 630 A		
N	H	S	L	R	HB1	HB2	N	H	S	L	R	HB1	HB2	R	HB1	HB2
400				**400**			**630**				**630**					
3, 4				3, 4			3, 4				3, 4					
85	100	120	150	200	-	-	85	100	120	150	200	-	-	200	-	-
50	70	100	150	200	-	-	50	70	100	150	200	-	-	200	-	-
42	65	90	130	200	-	-	42	65	90	130	200	-	-	200	-	-
30	50	65	70	80	85	100	30	50	65	70	80	85	100	80	85	100
22	35	40	50	65	80	100	22	35	40	50	65	80	100	65	80	100
10	20	25	35	45	75	100	10	20	25	35	45	75	100	45	75	100
85	100	120	150	200	-	-	85	100	120	150	200	-	-	200	-	-
50	70	100	150	200	-	-	50	70	100	150	200	-	-	200	-	-
42	65	90	130	200	-	-	42	65	90	130	200	-	-	200	-	-
30	50	65	70	80	85	100	30	50	65	70	80	85	100	80	85	100
11	11	12	12	65	80	100	11	11	12	12	65	80	100	-	-	-
10	10	12	12	45	75	100	10	10	12	12	45	75	100	-	-	-
15000				15000			15000				15000					
12000				12000			8000				8000					
6000				6000			4000				4000					
6000				6000			6000				6000					
3000				3000			2000				2000					
85	100	120	150	200	-	-	85	100	120	150	200	-	-	200	-	-
42	65	90	130	150	85	100	42	65	90	130	150	85	100	150	85	100
20	35	40	50	50	75	100	20	35	40	50	50	75	100	50	75	100
85	85	-	-	-	-	-	85	85	-	-	-	-	-	-	-	-
50	65	-	-	-	-	-	50	65	-	-	-	-	-	-	-	-
10	20	-	-	-	-	-	20	20	-	-	-	-	-	-	-	-
■							■									
-							-									
■							■									
■							■									
■							■									
■							■									
■							■									
■							■									
■							■									
■							■									
■							■									
■							■									
■							■									
■							■									
■							■									
140 x 255 x 110							140 x 255 x 110									
185 x 255 x 110							185 x 255 x 110									
6.05							6.2									
7.90							8.13									
45/52.5 mm							45/52.5 mm									
45/70 mm							45/70 mm									
4 x 240							4 x 240									

Introduction
Compact NSX trip units

With Micrologic electronic trip units, Compact NSX stands out from the crowd. Thanks to the new generation of sensors and its processing capability, protection is enhanced even further. It also provides measurements and operating information.

Thermal-magnetic or electronic trip unit?

Thermal-magnetic trip units protect against overcurrents and short-circuits using tried and true techniques. But today, installation optimisation and energy efficiency have become decisive factors and electronic trip units offering more advanced protection functions combined with measurements are better suited to these needs.
Micrologic electronic trip units combine reflex tripping and intelligent operation. Thanks to digital electronics, trip units have become faster as well as more accurate and reliable. Wide setting ranges make installation upgrades easier. Designed with processing capabilities, Micrologic trip units can provide measurement information and device operating assistance. With this information, users can avoid or deal more effectively with disturbances and can play a more active role in system operation. They can manage the installation, anticipate on events and plan any necessary servicing.

Accurate measurements for complete protection

Compact NSX devices take advantage of the vast experience acquired since the launch of Masterpact NW circuit breakers equipped with Micrologic trip units. From 40 amperes on up to the short-circuit currents, they offer excellent measurement accuracy. This is made possible by a new generation of current transformers combining "iron-core" sensors for self-powered electronics and "air-core" sensors (Rogowski toroids) for measurements.
The protection functions are managed by an ASIC component that is independent of the measurement functions. This independence ensures immunity to conducted and radiated disturbances and a high level of reliability.

Numerous security functions

Torque-limiting screws
The screws secure the trip unit to the circuit breaker. When the correct tightening torque is reached, the screw heads break off. Optimum tightening avoids any risk of temperature rise. A torque wrench is no longer required.

Easy and sure changing of trip units
All trip units are interchangeable, without wiring. A mechanical mismatch-protection system makes it impossible to mount a trip unit on a circuit breaker with a lower rating.

"Ready" LED for a continuous self-test
The LED on the front of the electronic trip units indicates the result of the self-test runs continuously on the measurement system and the tripping release. As long as the green LED is flashing, the links between the CTs, the processing electronics and the Mitop release are operational. The circuit breaker is ready to protect. No need for a test kit. A minimum current of 15 to 50 A, depending on the device, is required for this indication function.

A patented dual adjustment system for protection functions.
Available on Micrologic 5 / 6, the system consists of:
- an adjustment using dials sets the maximum value
- an adjustment, made via the keypad or remotly, fine-tunes the setting. This setting may not exceed the first one. It can be read directly on the Micrologic screen, to within one ampere and a fraction of a second.

Coordinated tripping systems

Compact NSX detects faults even faster and its tripping time is reduced. It protects the installation better and limits contact wear.

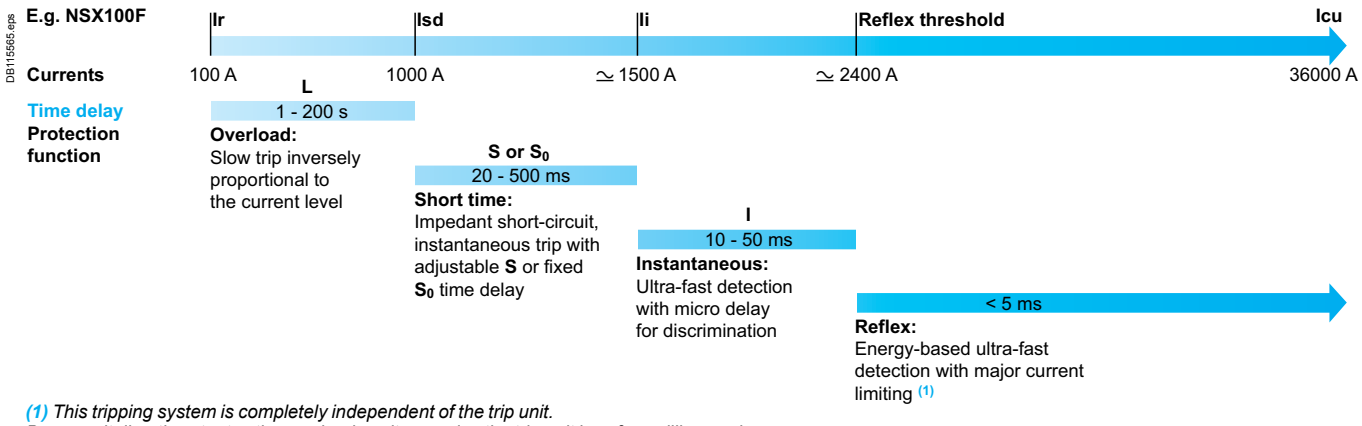

(1) This tripping system is completely independent of the trip unit.
Because it directly actuates the mechanism, it precedes the trip unit by a few milliseconds.

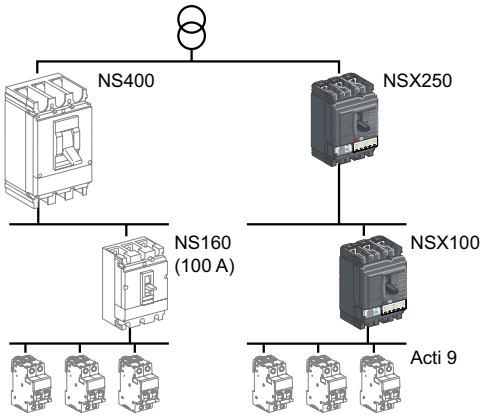

Compact NSX100 with Micrologic for total discrimination with Acti 9 devices rated ≤ 40 A or a C60. *Better coordination between protection functions reduces the difference in ratings required for total discrimination.*

Unmatched discrimination

Discrimination

Compact NSX provides maximum continuity of service and savings through an unmatched level of discrimination:

■ given the high accuracy of measurements, overload discrimination is ensured even between very close ratings

■ for major faults, the fast processing of the Micrologic trip units means the upstream device can anticipate the reaction of the downstream device. The upstream breaker adjusts its tripping delay to provide discrimination

■ for very high faults, the energy of the arc dissipated by the short-circuit in the downstream breaker causes reflex tripping. The current seen by the upstream device is significantly limited. The energy is not sufficient to cause tripping, so discrimination is maintained whatever the short-circuit current.

For total discrimination over the entire range of possible faults, from the long-time pick-up Ir to the ultimate short-circuit current Icu, a ratio of 2.5 must be maintained between the ratings of the upstream and downstream devices.
This ratio is required to ensure selective reflex tripping for high short-circuits.

Understanding the names of Micrologic electronic trip units

Protection	Frame	Measurements	Applications
1: I **2**: LS_0I **5**: LSI **6**: LSIG	**2**: NSX100/160/250 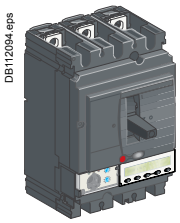 	**A**: Ammeter  	Distribution, otherwise **G**: Generator **AB**: Public distribution (1) **M**: Motors **Z**: 16 Hz 2/3 (1)
I: Instantaneous **L**: Long time **S_0**: Short time (2) (fixed delay) **S**: Short time **G**: Ground fault	**3**: NSX400/630 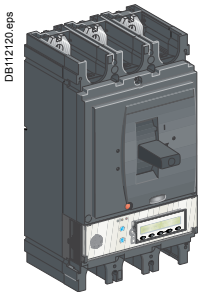 	**E**: Energy 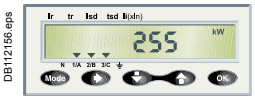 	

Examples

Micrologic 1.3	Instantaneous only	400 or 630 A		Distribution
Micrologic 2.3	LS_0I	400 or 630 A		Distribution
Micrologic 5.2 A	LSI	100, 160 or 250 A	Ammeter	Distribution
Micrologic 6.3 E-M	LSIG	400 or 630 A	Energy	Motor

(1) AB-Z: except NSX R, HB1, HB2.
(2) LS_0I protection is standard on Micrologic 2. To ensure discrimination, it offers short-time protection S_0 with a non-adjustable delay and instantaneous protection.

Introduction
Overview of trip units for Compact NSX

Compact NSX offers a range of trip units in interchangeable cases, whether they are magnetic, thermal-magnetic or electronic. Versions 5 and 6 of the electronic trip unit offer communication and metering. Using Micrologic sensors and intelligence, Compact NSX supplies all the information required to manage the electrical installation and optimise energy use.

Compact NSX100/160/250

DB112094.eps

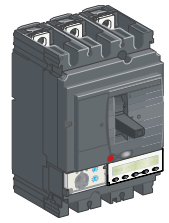

Compact NSX400/630

DB112120.eps

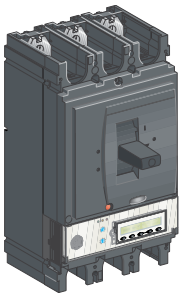

Type of protection and applications

MA magnetic	TM-D thermal-magnetic
DB112028.eps 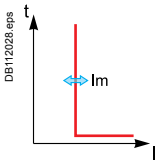	DB112029.eps 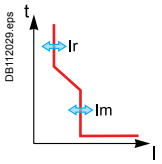
■ Distribution and motors	■ Distribution ■ Generators

Circuit breakers and trip units

MA magnetic	TM-D thermal-magnetic
DB112022.eps 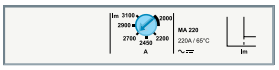	DB112023.eps 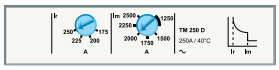
MA Distribution and motors	TM-D Distribution TM-G Generators

DB112092.eps 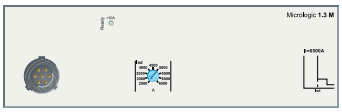

1.3 M Distribution and motors

Settings and indications

MA magnetic	TM-D thermal-magnetic
DB112037.eps 	DB112038.eps 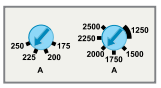
Adjustment and reading Pick-up set in amps using dials *Non-adjustable time delay*	**Adjustment and reading** Pick-up set in amps using dials *Non-adjustable time delay*

Micrologic 2 electronic

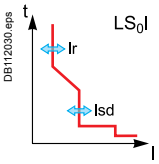

■ Distribution
■ Service connection (public distribution)
■ Generators
■ Motors (I only)
■ Motors



2.2 Distribution
2.2 AB Service connection (public distribution)
2.2 G Generators
2.2 M Motors

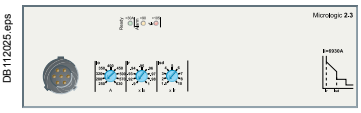

2.3 Distribution
2.3 AB Service connection (public distribution)
1.3 M Motors (I only)
2.3 M Motors

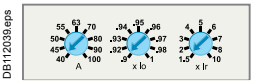

Adjustment and reading
Pick-up set in amps with fine adjustment using dials
Non-adjustable time delay



Front indications



Test connector

Self test

Micrologic 5 / 6 A or E electronic trip units

5 A or E

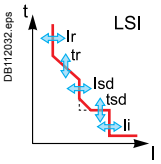

■ Distribution and generators

6 A or E

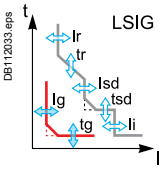

■ Distribution and generators

6 E-M

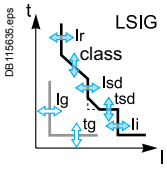

■ Motors

A: current metering functions
E :current and energy metering functions.



5.2 A Distribution and generators
5.2 E Distribution and generators
5.2 A-Z 16 Hz 2/3 networks

6.2 A Distribution and generators
6.2 E Distribution and generators



6.2 E-M Motors

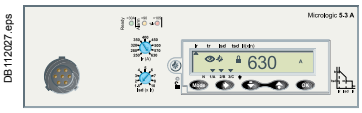

5.3 A Distribution and generators
5.3 E Distribution and generators
5.3 A-Z 16 Hz 2/3 networks

6.3 A Distribution and generators
6.3 E Distribution and generators

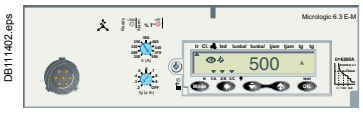

6.3 E-M Motors

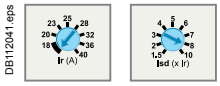

Adjustment and reading
Pick-up set in amps



Fine adjustment via keypad



Adjustable time delays



Front indications



Test connector

Self test



FDM121



FDM128

Connection to switchboard display unit

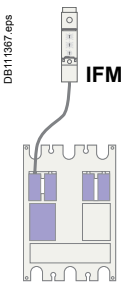

IFM

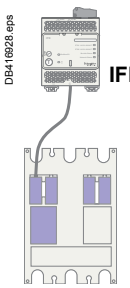

IFE

Communication to Modbus

Introduction
Overview of trip units for Compact NSX

The capabilities of Micrologic 5 / 6 A and E trip units come into full play with the FDM121 switchboard display unit.
When the two are connected via a simple cord with RJ45 connectors, the combination offers full Power Meter capabilities and all the measurements required to monitor the electrical installation.

DB112044.eps

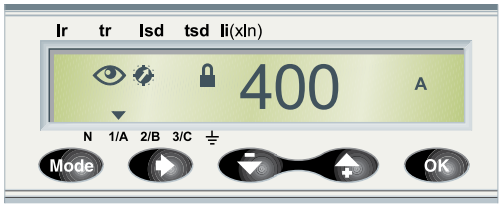

DB416930.eps

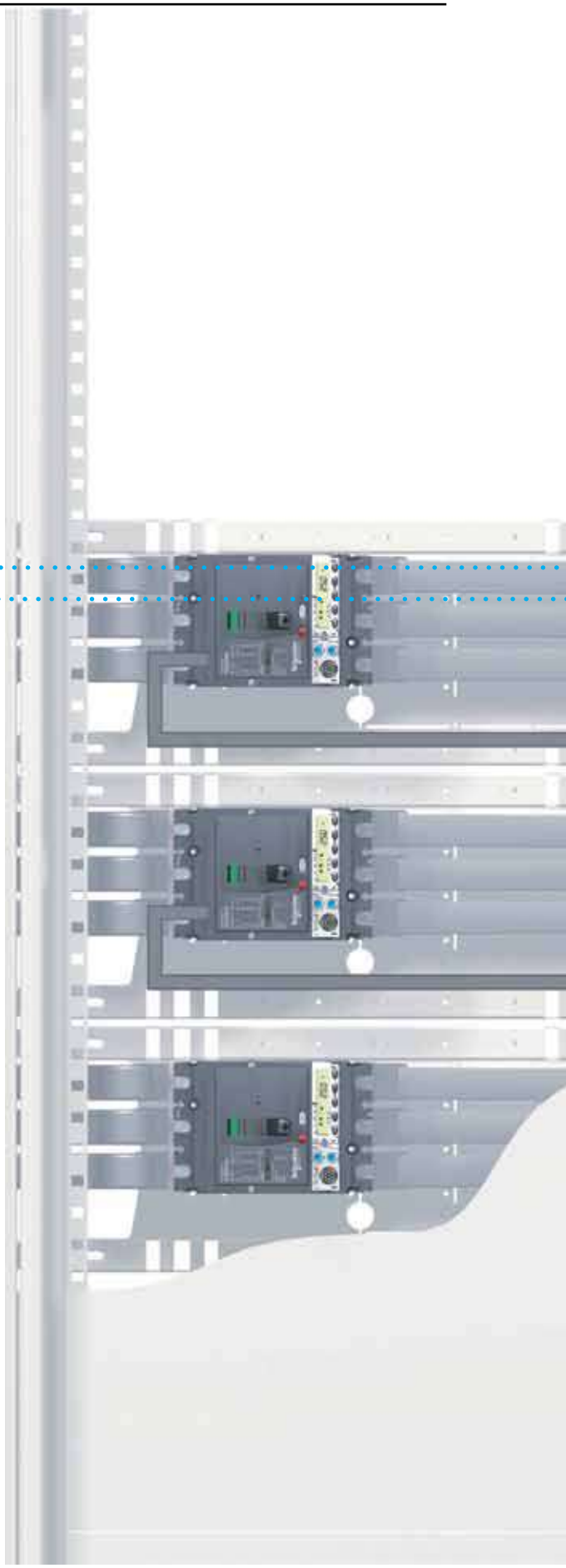

Ammeter Micrologic (A)

I measurements

Current measurements
- Phase and neutral currents I1, I2, I3, IN
- Average current of the 3 phases Iavg
- Highest current of the three phases Imax
- Ground-fault current Ig (Micrologic 6.2 / 6.3 A)
- Maximeter/minimeter for I measurements

Operating and maintenance assistance

Indications, alarms and histories
- Indication of fault types
- Alarms for high/low alarm thresholds linked to I measurements
- Trip, alarm and operating histories
- Time-stamped tables for settings and maximeters

Maintenance indicators
- Operation, trip and alarm counters
- Operating hours counter
- Contact wear
- Load profile and thermal image

Communication
- Modbus with add-on module
- Ethernet with add-on module



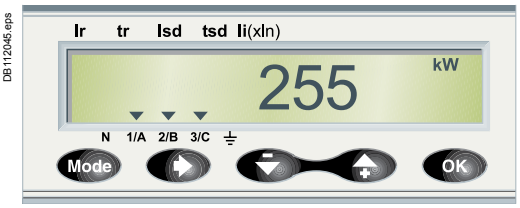

Energy Micrologic (E)

I, U, f, P, E, THD measurements

Current measurements
- Phase and neutral currents I1, I2, I3, IN
- Average current of the 3 phases Iavg
- Highest current of the three phases Imax
- Ground-fault current Ig (Micrologic 6.2 / 6.3 A)
- Maximeter/minimeter for I measurements
- Current unbalance between phases

Voltage measurements
- Phase-to-phase (U) et phase-to-neutral (V) voltages
- Average voltages Uavg, Vavg
- Ph-Ph (U) and Ph-N (V) voltage unbalance

Frequency measurements
- Frequency (f)

Power-quality indicators
- Total harmonic distortion (THD) for current and voltage

Power measurements
- Active, reactive and apparent power, total and per phase
- Power factor and cos φ

Maximeters/minimeters
- For all I, U, f, P, E measurements

Demand current and power measurements
- Demand values, total and per phase
- Maximum demand

Energy metering
- Active, reactive and apparent energy, total and per phase

Operating and maintenance assistance

Indications, alarms and histories
- Indication of fault types
- Alarms for high/low thresholds linked to I, U, f, P, E measurements
- Trip, alarm and operating histories
- Time-stamped tables for settings and I, U, f, P, E maximeters

Maintenance indicators
- Operation, trip and alarm counters
- Operating hours counter
- Contact wear
- Load profile and thermal image

Communication
- Modbus with add-on module
- Ethernet with add-on module

Protection of distribution systems up to 415 V applications

TM thermal-magnetic and MA magnetic trip units

TM thermal-magnetic and MA magnetic trip units can be used on Compact NSX100/160/250 circuit breakers with performance levels B/F/H/N/S/L.
TM trip units are available in 2 versions:
■ TM-D, for the protection of distribution cables
■ TM-G, with a low threshold, for the protection of generators or long cable lengths.
Vigi modules or Vigirex relays can be added to all the circuit breakers to provide external earth-leakage protection.

TM-D and TM-G thermal-magnetic trip units

DB112046.eps

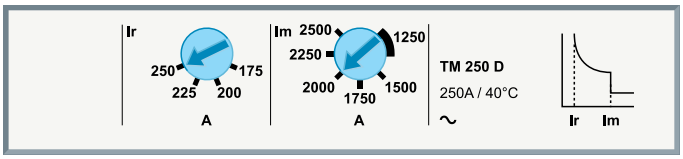

Circuit breakers equipped with thermal-magnetic trip units are used mainly in industrial and commercial electrical distribution applications:
■ TM-D, for protection of cables on distribution systems supplied by transformers
■ TM-G, with a low pick-up for generators (lower short-circuit currents than with transformers) and distribution systems with long cable lengths (fault currents limited by the impedance of the cable).

Protection

Thermal protection (Ir)
Thermal overload protection based on a bimetal strip providing an inverse time curve I^2t, corresponding to a temperature rise limit. Above this limit, the deformation of the strip trips the circuit breaker operating mechanism.
This protection operates according to:
■ **Ir** that can be adjusted in amps from 0.7 to 1 times the rating of the trip unit (16 A to 250 A), corresponding to settings from 11 to 250 A for the range of trip units
■ a non-adjustable time delay, defined to ensure protection of the cables.

Magnetic protection (Im)
Short-circuit protection with a fixed or adjustable pick-up Im that initiates instantaneous tripping if exceeded.
■ TM-D: fixed pick-up, Im, for 16 to 160 A ratings and adjustable from 5 to 10 x In for 200 and 250 A ratings
■ fixed pick-up for 16 to 63 A ratings.

Protection against insulation faults
Two solutions are possible by adding:
■ a Vigi module acting directly on the trip unit of the circuit breaker
■ a Vigirex relay connected to an MN or MX voltage release.

Protection versions
■ 3-pole:
□ 3P 3D: 3-pole frame (3P) with detection on all 3 poles (3D)
□ 3P 2D: 3-pole frame (3P) with detection on 2 poles (2D).
■ 4-pole:
□ 4P 3D: 4-pole frame (4P) with detection on 3 poles (3D).
□ 4P 4D: 4-pole frame (4P) with detection on all 4 poles (same threshold for phases and neutral).

MA magnetic trip units

DB112047.eps

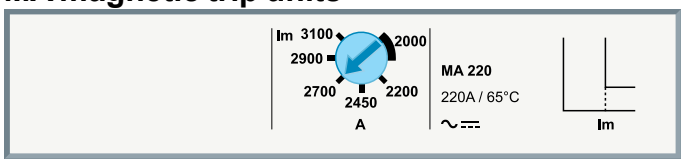

In distribution applications, circuit breakers equipped with MA magnetic-only trip units are used for:
■ short-circuit protection of secondary windings of LV/LV transformers with overload protection on the primary side.
■ as an alternative to a switch-disconnector at the head of a switchboard in order to provide short-circuit protection.
Their main use is however for motor protection applications, in conjunction with a thermal relay and a contactor or motor starter (see "Motor protection", page A-46).

Protection

Magnetic protection (Im)
Short-circuit protection with an adjustable pick-up Im that initiates instantaneous tripping if exceeded.
■ **Im = In x ...** set in amps on an adjustment dial covering the range 6 to 14 x In for 2.5 to 100 A ratings or 9 to 14 In for 150 to 220 A ratings.

Protection versions
■ 3-pole (3P 3D): 3-pole frame (3P) with detection on all 3 poles (3D).
■ 4-pole (4P 3D): 4-pole frame (4P) with detection on 3 poles (3D).

Note: All the trip units have a transparent lead-sealable cover that protects access to the adjustment dials.

Thermal-magnetic trip units		TM16D to 250D											
Ratings (A)	**In at 40 °C** (1)	**16**	**25**	**32**	**40**	**50**	**63**	**80**	**100**	**125**	**160**	**200**	**250**
Circuit breaker	Compact NSX100	■	■	■	■	■	■	■	■	-	-	-	-
	Compact NSX160	-	-	■	■	■	■	■	■	■	■	-	-
	Compact NSX250	-	-	-	-	-	■	■	■	■	■	■	■
Thermal protection													
Pick-up (A) tripping between 1.05 and 1.20 Ir	**Ir** = In x ...	adjustable in amps from 0.7 to 1 x In											
Time delay (s)	**tr**	non-adjustable											
	tr at 1.5 x In	120 to 400											
	tr at 6 x Ir	15											
Magnetic protection													
Pick-up (A)	**Im**	fixed										adjustable	
accuracy ±20 %	Compact NSX100	190	300	400	500	500	500	640	800				
	Compact NSX160/250	190	300	400	500	500	500	640	800	1250	1250	5 to 10xIn	
Time delay	**tm**	fixed											
Neutral protection													
Unprotected neutral	4P 3D	no detection											
Fully protected neutral	4P 4D	1 x Ir											

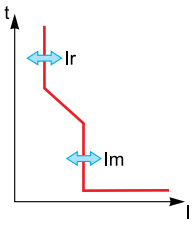

Magnetic trip units		MA 2.5 to 220							
Ratings (A)	**In at 65 °C**	**2.5**	**6.3**	**12.5**	**25**	**50**	**100**	**150**	**220**
Circuit breaker	Compact NSX100	■	■	■	■	■	■	-	-
	Compact NSX160	-	-	-	■	■	■	■	-
	Compact NSX250	-	-	-	-	-	■	■	■
Instantaneous magnetic protection									
Pick-up (A) accuracy ±20 %	**Im** = In x ...	adjustable in amps from 6 to 14 x In (9 settings)							
Time delay (ms)	**tm**	none							

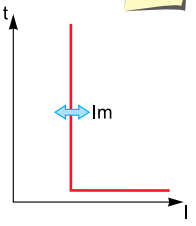

Thermal-magnetic trip units		TM16G to 250G									
Ratings (A)	**In at 40 °C** (1)	**16**	**25**	**40**	**63**	**80**	**100**	**125**	**160**	**200**	**250**
Circuit breaker	Compact NSX100	■	■	■	■	■	■	-	-	-	-
	Compact NSX160	-	■	■	■	■	■	■	■	-	-
	Compact NSX250	-	-	-	-	-	-	-	■	■	■
Thermal protection											
Pick-up (A) tripping between 1.05 and 1.20 Ir	**Ir** = In x ...	adjustable in amps from 0.7 to 1 x In									
Time delay (s)	**tr**	non-adjustable									
	tr at 1.5 x In	120 to 400									
	tr at 6 x Ir	-									
Magnetic protection											
Pick-up (A)	**Im**	fixed									
accuracy ±20 %	Compact NSX100	63	80	80	125	200	320	-	-	-	-
	Compact NSX160	-	80	80	125	200	320	440	440	-	-
	Compact NSX250	-	-	-	-	-	-	-	440	440	520
Time delay	**tm**	fixed									
Neutral protection											
Unprotected neutral	4P 3D	no									
Fully protected neutral	4P 4D	1 x Ir									

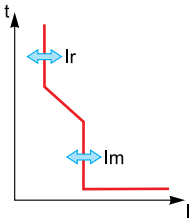

(1) For temperatures greater than 40 °C, the thermal protection characteristics are modified. See the temperature derating table.

Protection of distribution systems up to 415 V applications
Micrologic 2 and 1.3 M trip units

Micrologic 2 trip units can be used on Compact NSX100 to 630 circuit breakers with performance levels B/F/H/N/S/L.
They provide:
■ standard protection of distribution cables
■ indication of:
□ overloads (via LEDs)
□ overload tripping (via the SDx relay module).
Circuit breakers equipped with Micrologic 1.3 M trip units, without thermal protection, are used in certain applications to replace switch-disconnectors at the head of switchboards. Micrologic 1.3 M trip units are dedicated to Compact NSX400/630 A circuit breakers.

Micrologic 2

DB112050.eps

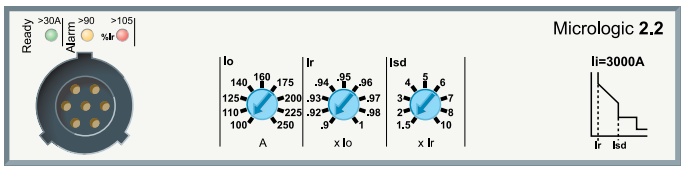

Circuit breakers equipped with Micrologic 2 trip units can be used to protect distribution systems supplied by transformers. For generators and long cables, Micrologic 2 G trip units offer better suited low pick-up solutions (see page A-60).

Protection

Settings are made using the adjustment dials with fine adjustment possibilities.

Overloads: Long time protection (Ir)
Inverse time protection against overloads with an adjustable current pick-up Ir set using a dial and a non-adjustable time delay tr.

Short-circuits: Short-time protection with fixed time delay (Isd)
Protection with an adjustable pick-up Isd. Tripping takes place after a very short delay used to allow discrimination with the downstream device.

Short-circuits: Non-adjustable instantaneous protection
Instantaneous short-circuit protection with a fixed pick-up.

Neutral protection
■ On 3-pole circuit breakers, neutral protection is not possible.
■ On four-pole circuit breakers, neutral protection may be set using a three-position switch:
□ 4P 3D: neutral unprotected
□ 4P 3D + N/2: neutral protection at half the value of the phase pick-up, i.e. 0.5 x Ir
□ 4P 4D: neutral fully protected at Ir.

DB112051.eps

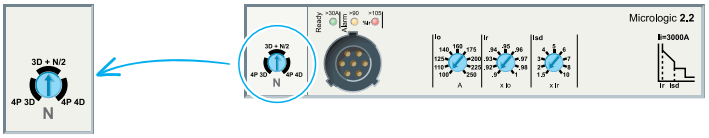

PB103377.eps



SDx remote indication relay module with its terminal block.

Indications

Front indications
■ Green “Ready” LED: flashes slowly when the circuit breaker is ready to trip in the event of a fault.
■ Orange overload pre-alarm LED: steady on when I > 90 % Ir.
■ Red overload LED: steady on when I > 105 % Ir.

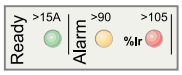

Remote indications
An overload trip signal can be remoted by installing an SDx relay module inside the circuit breaker.
This module receives the signal from the Micrologic electronic trip unit via an optical link and makes it available on the terminal block. The signal is cleared when the circuit breaker is reclosed. For description, see page A-91.

Micrologic 1.3 M for magnetic protection only

DB112106.eps

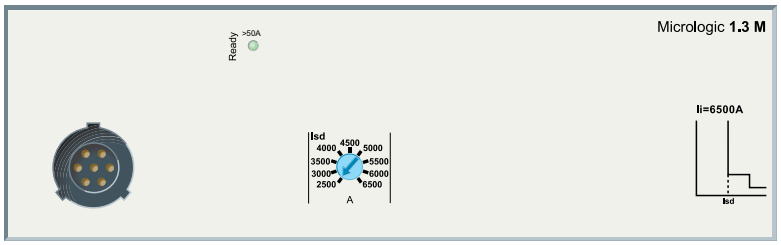

Micrologic 1.3 M trip units provide magnetic protection only, using electronic technology. They are dedicated to 400/630 A 3-pole (3P 3D) circuit breakers or 4-pole circuit breakers with detection on 3 poles (4P, 3D) and are used in certain applications to replace switch-disconnectors at the head of switchboards. They are especially used in 3-pole versions for motor protection, see page A-50.

Note: *all the trip units have a transparent lead-sealable cover that protects access to the adjustment dials.*

Micrologic 2

Ratings (A)	In at 40 °C (1)		40	100	160	250	400	630			
Circuit breaker	Compact NSX100		■	■	-	-	-	-			
	Compact NSX160		■	■	■	-	-	-			
	Compact NSX250		■	■	■	■	-	-			
	Compact NSX400		-	-	-	■	■	-			
	Compact NSX630		-	-	-	■	■	■			
L Long-time protection											
Pick-up (A)		Io	value depending on trip unit rating (In) and setting on dial								
tripping between 1.05 and 1.20 Ir	In = 40 A	Io =	18	18	20	23	25	28	32	36	40
	In = 100 A	Io =	40	45	50	55	63	70	80	90	100
	In = 160 A	Io =	63	70	80	90	100	110	125	150	160
	In = 250 A (NSX250)	Io =	100	110	125	140	160	175	200	225	250
	In = 250 A (NSX400)	Io =	70	100	125	140	160	175	200	225	250
	In = 400 A	Io =	160	180	200	230	250	280	320	360	400
	In = 630 A	Io =	250	280	320	350	400	450	500	570	630
	Ir = Io x ...		9 fine adjustment settings from 0.9 to 1 (0.9 - 0.92 - 0.93 - 0.94 - 0.95 - 0.96 - 0.97 - 0.98 - 1) for each value of Io								
Time delay (s) accuracy 0 to -20%	**tr**		non-adjustable								
		1.5 x Ir	400								
		6 x Ir	16								
		7.2 x Ir	11								
Thermal memory			20 minutes before and after tripping								
S_0 Short-time protection with fixed time delay											
Pick-up (A) accuracy ±10 %	**Isd** = Ir x ...		1.5	2	3	4	5	6	7	8	10
Time delay (ms)	**tsd**		non-adjustable								
	Non-tripping time		20								
	Maximum break time		80								
I Instantaneous protection											
Pick-up (A) accuracy ±15 %	Ii non-adjustable		600	1500	2400	3000	4800	6900			
	Non-tripping time Maximum break time		10 ms 50 ms for I > 1.5 Ii								

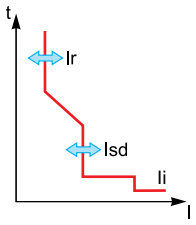

(1) If the trip units are used in high-temperature environments, the Micrologic setting must take into account the thermal limitations of the circuit breaker. See the temperature derating table.

Micrologic 1.3 M

Ratings (A)	In at 65 °C	320	500
Circuit breaker	Compact NSX400	■	-
	Compact NSX630	■	■
S Short time protection			
Pick-up (A) accuracy ±15 %	**Isd**	adjustable directly in amps	
		9 settings: 1600, 1920, 2440, 2560, 2880, 3200, 3520, 3840, 4160 A	9 settings: 2500, 3000, 3500, 4000, 4500, 5000, 5500, 6000, 6500 A
Time delay (ms)	**tsd**	non-adjustable	
	Non-tripping time Maximum break time	10 60	
I Instantaneous protection			
Pick-up (A) accuracy ±15 %	**Ii** non-adjustable	4800	6500
	Non-tripping time Maximum break time	0 30 ms	

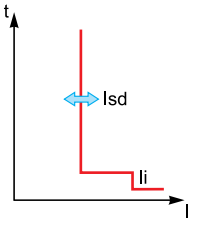

Protection of distribution systems up to 415 V applications
Micrologic 5 / 6 A or E trip units

Micrologic 5 / 6 A (Ammeter) or E (Energy) trip units can be used on Compact NSX100 to 630 circuit breakers with performance levels B/F/H/N/S/L. They all have a display unit.
They offer basic LSI protection (Micrologic 5) or LSI and ground-fault protection G (Micrologic 6).
They also offer measurement, alarm and communication functions.

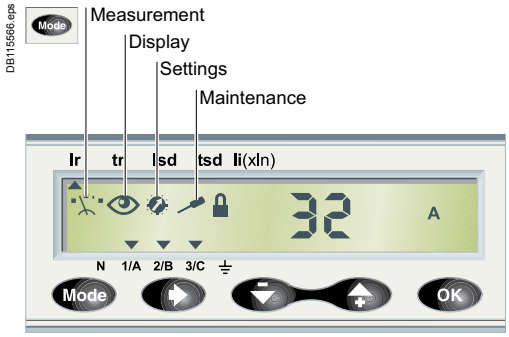

Trip unit menus.

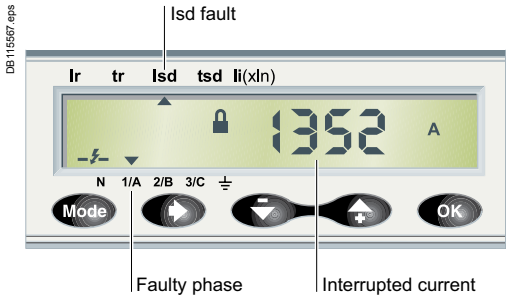

Display of interrupted current.



SDx remote indication relay module with its terminal block.

Note: all the trip units have a transparent lead-sealable cover that protects access to the adjustment dials.

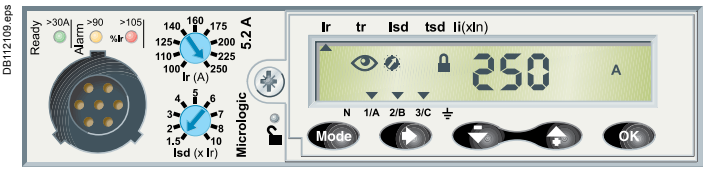

Protection

Settings can be adjusted in two ways, using the dials and/or the keypad. The keypad can be used to make fine adjustments in 1 A steps below the maximum value defined by the setting on the dial. Access to setting modifications via the keypad is protected by a locking function displayed on the screen and controlled by a microswitch. The lock is activated automatically if the keypad is not used for 5 minutes. Access to the microswitch is protected by a transparent lead-sealable cover. With the cover closed, it is still possible to display the various settings and measurements using the keypad.

Overloads: Long time protection (Ir)
Inverse time protection against overloads with an adjustable current pick-up **Ir** set using a dial or the keypad for fine adjustments. The time delay **tr** is set using the keypad.

Short-circuits: Short-time protection (Isd)
Short-circuit protection with an adjustable pick-up **Isd** and adjustable time delay **tsd**, with the possibility of including a portion of an inverse time curve (I^2t On).

Short-circuits: Instantaneous protection (Ii)
Instantaneous protection with adjustable pick-up **Ii**.

Additional ground fault protection (Ig) on Micrologic 6
Residual type ground-fault protection with an adjustable pick-up **Ig** (with Off position) and adjustable time delay **tg**. Possibility of including a portion of an inverse time curve (I^2t On).

Neutral protection
- On 4-pole circuit breakers, this protection can be set via the keypad:
  - Off: neutral unprotected
  - 0.5: neutral protection at half the value of the phase pick-up, i.e. 0.5 x Ir
  - 1.0: neutral fully protected at Ir
  - OSN: Oversized neutral protection at 1.6 times the value of the phase pick-up. Used when there is a high level of 3rd order harmonics (or orders that are multiples of 3) that accumulate in the neutral and create a high current. In this case, the device must be limited to Ir = 0.63 x In for the maximum neutral protection setting of 1.6 x Ir.
- With 3-pole circuit breakers, the neutral can be protected by installing an external neutral sensor with the output (T1, T2) connected to the trip unit.

Zone selective interlocking (ZSI)
A ZSI terminal block may be used to interconnect a number of Micrologic control units to provide zone selective interlocking for short-time (Isd) and ground-fault (Ig) protection, without a time delay. For Compact NSX 100 to 250, the ZSI function is available only in relation to the upstream circuit breaker (ZSI out).

Display of type of fault

On a fault trip, the type of fault (Ir, Isd, Ii, Ig), the phase concerned and the interrupted current are displayed. An external power supply is required.

Indications

Front indications

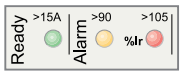

- Green “Ready” LED: flashes slowly when the circuit breaker is ready to trip in the event of a fault.
- Orange overload pre-alarm LED: steady on when I > 90 % Ir.
- Red overload LED: steady on when I > 105 % Ir.

Remote indications
An SDx relay module installed inside the circuit breaker can be used to remote the following information:
- overload trip
- overload prealarm (Micrologic 5) or ground fault trip (Micrologic 6).

This module receives the signal from the Micrologic electronic trip unit via an optical link and makes it available on the terminal block. The signal is cleared when the circuit breaker is closed.
These outputs can be reprogrammed to be assigned to other types of tripping or alarm. The module is described in detail in the section dealing with accessories.

Protection	Micrologic 5 / 6 A or E trip units											
Ratings (A)	**In at 40 °C** (1)			**40** (2)	**100**	**160**	**250**	**400**	**630**			
Circuit breaker	Compact NSX100			■	■	-	-	-	-			
	Compact NSX160			■	■	■	-	-	-			
	Compact NSX250			■	■	■	■	-	-			
	Compact NSX400			-	-	-	-	■	-			
	Compact NSX630			-	-	-	-	■	■			
L **Long-time protection**												
Pick-up (A) tripping between 1.05 and 1.20 Ir	**Ir** = ...	dial setting		value depending on trip unit rating (In) and setting on dial								
		In = 40 A	Io =	18	18	20	23	25	28	32	36	40
		In = 100 A	Io =	40	45	50	55	63	70	80	90	100
		In = 160 A	Io =	63	70	80	90	100	110	125	150	160
		In = 250 A	Io =	100	110	125	140	160	175	200	225	250
		In = 400 A	Io =	160	180	200	230	250	280	320	360	400
		In = 630 A	Io =	250	280	320	350	400	450	500	570	630
		keypad setting		Fine adjustment in 1 A steps below maximum value set on dial								
Time delay (s) accuracy 0 to -20 %	**tr** = ...	keypad setting		0.5	1	2	4	8	16			
			1.5 x Ir	15	25	50	100	200	400			
			6 x Ir	0.5	1	2	4	8	16			
			7.2 x Ir	0.35	0.7	1.4	2.8	5.5	11			
Thermal memory				20 minutes before and after tripping								
S **Short-time protection with adjustable time delay**												
Pick-up (A) accuracy ±10 %	**Isd** = Ir x ...	dial setting for Micrologic 5		1.5	2	3	4	5	6	7	8	10
				Fine adjustment in 0.5 x Ir steps using the keypad								
		keypad settings for micrologic 6		Adjustment in steps of 0.5 x In over the range 1.5 x In to: 15 x In (40 to 160 A), 12 x In (250 to 400 A) or 11 x In (630 A)								
Time delay (s)	**tsd** = ...	keypad setting	I^2Off	0	0.1	0.2	0.3	0.4				
			I^2On	-	0.1	0.2	0.3	0.4				
		Non-tripping time (ms)		20	80	140	230	350				
		Maximum break time (ms)		80	140	200	320	500				
I **Instantaneous protection**												
Pick-up (A) accuracy ±15 %	**Ii** = In x	keypad setting		Adjustment in steps of 0.5 x In over the range 1.5 x In to: 15 x In (40 to 160 A), 12 x In (250 to 400 A) or 11 x In (630 A)								
		Non-tripping time Maximum break time		10 ms 50 ms for I > Ii								
G **Ground-fault protection - for Micrologic 6 A or E**												
Pick-up (A) accuracy ±10 %	**Ig** = In x	dial setting										
		In = 40 A		0.4	0.4	0.5	0.6	0.7	0.8	0.9	1	Off
		In > 40 A		0.2	0.3	0.4	0.5	0.6	0.7	0.8	1	Off
				Fine adjustment in 0.05 A steps using the keypad								
Time delay (s)	**tg** = ...	keypad setting	I^2Off	0	0.1	0.2	0.3	0.4				
			I^2On	-	0.1	0.2	0.3	0.4				
		Non-tripping time (ms)		20	80	140	230	350				
		Maximum break time (ms)		80	140	200	320	500				
Test	Ig function			built-in								

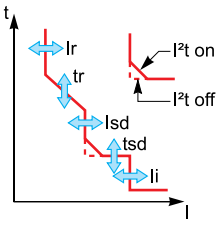

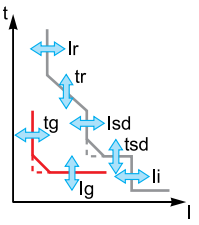

(1) If the trip units are used in high-temperature environments, the Micrologic setting must take into account the thermal limitations of the circuit breaker. See the temperature derating table.
(2) For 40 A rating, the neutral N/2 adjustment is not possible.

Power Meter functions
Electronic Micrologic 5 / 6 A or E

In addition to protection functions, Micrologic 5 / 6 trip units offer all the functions of Power Meter products as well as operating-assistance for the circuit breaker.
- ■ display of settings
- ■ measurement functions:
- □ Ammeter (A)
- □ Energy (E)
- ■ alarms
- ■ time-stamped histories and event tables
- ■ maintenance indicator
- ■ communication
- ■ Refer to: user manual "ULP system" TRV99101.

PB103365.eps



Micrologic built-in LCD display showing an energy measurement.

DB125911.eps



FDM121 display: navigation.

DB112131.eps



Current.

DB112132.eps

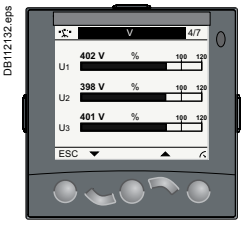

Voltage.

DB112133.eps



Power.

DB112134.eps

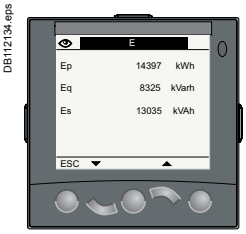

Consumption.

Examples of measurement screens on the FDM121 display unit.

Micrologic A and E measurement functions are made possible by Micrologic intelligence and the accuracy of the sensors. They are handled by a microprocessor that operates independent of protection functions.

Display

Micrologic LCD
The user can display all the protection settings and the main measurements on the LCD screen of the trip unit.
- ■ Micrologic A: instantaneous rms current measurements.
- ■ Micrologic E: voltage, frequency and power measurements and energy metering, in addition to the measurements offered by Micrologic A

To make the display available under all conditions and increase operating comfort, an external power supply is recommended for Micrologic A.
It is indispensable to:
- ■ display faults and interrupted current measurements
- ■ use all the functions of Micrologic E (e.g. metering of low power and energy values)
- ■ ensure operation of the communication system.

The external power supply can be shared by several devices. For description, see page A-42.

FDM121 display unit
An FDM121 switchboard display unit can be connected to a Micrologic trip unit using a prefabricated cord to display all measurements on a screen. The result is a veritable 96 x 96 mm Power Meter.
In addition to the information displayed on the Micrologic LCD, the FDM121 screen shows demand, power quality and maximeter/minimeter values along with alarms, histories and maintenance indicators.
The FMD121 display unit requires a 24 V DC power supply. The Micrologic trip unit is supplied by the same power supply via the cord connecting it to the FDM121.

PC screen
When the Micrologic, with or without an FDM121 switchboard display unit, is connected to a communication network, all information can be accessed via a PC.

Measurements

Instantaneous rms measurements
The Micrologic A and E continuously display the RMS value of the highest current of the three phases and neutral (Imax). The navigation buttons ◆ can be used to scroll through the main measurements.
In the event of a fault trip, the current interrupted is memorised.
The Micrologic A measures phase, neutral, ground fault currents.
The Micrologic E offers voltage, frequency and power measurements in addition to the measurements provided by Micrologic A.

Maximeters / minimeters
Every instantaneous measurement provided by Micrologic A or E can be associated with a maximeter/minimeter. The maximeters for the highest current of the 3 phases and neutral, the demand current and power can be reset via the trip unit keypad, the FDM121 display unit or the communication system.

Energy metering
The Micrologic E also measures the energy consumed since the last reset of the meter. The active energy meter can be reset via the keypad and the FDM121 display unit or the communication system.

Demand and maximum demand values
Micrologic E also calculates demand current and power values. These calculations can be made using a block or sliding interval that can be set from 5 to 60 minutes in steps of 1 minute. The window can be synchronised with a signal sent via the communication system. Whatever the calculation method, the calculated values can be recovered on a PC via Modbus communication.
Ordinary spreadsheet software can be used to provide trend curves and forecasts based on this data. They will provide a basis for load shedding and reconnection operations used to adjust consumption to the subscribed power.

Power quality
Micrologic E calculates power quality indicators taking into account the presence of harmonics up to the 15th order, including the total harmonic distortion (THD) of current and voltage.


PB105112.eps


PB108167.eps


PB111801-21_r.eps

Micrologic 5 / 6 integrated Power Meter functions			Type		Display	
			A	E	Micrologic LCD	FDM display
Display of protection settings						
Pick-ups (A) and delays	All settings can be displayed	Ir, tr, Isd, tsd, Ii, Ig, tg	■	■	■	-
Measurements						
Instantaneous rms measurements						
Currents (A)	Phases and neutral	I1, I2, I3, IN	■	■	■	■
	Average of phases	Iavg = (I1 + I2 + I3) / 3	■	■	-	■
	Highest current of the 3 phases and neutral	Imax of I1, I2, I3, IN	■	■	■	■
	Ground fault (Micrologic 6)	% Ig (pick-up setting)	■	■	■	■
	Current unbalance between phases	% Iavg	-	■	-	■
Voltages (V)	Phase-to-phase	U12, U23, U31	-	■	■	■
	Phase-to-neutral	V1N, V2N, V3N	-	■	■	■
	Average of phase-to-phase voltages	Uavg = (U12 + U21 + U23) / 3	-	■	-	■
	Average of phase-to-neutral voltages	Vavg = (V1N + V2N + V3N) / 3	-	■	-	■
	Ph-Ph and Ph-N voltage unbalance	% Uavg and % Vavg	-	■	-	■
	Phase sequence	1-2-3, 1-3-2	-	■	■	■ (3)
Frequency (Hz)	Power system	f	-	■	-	■
Power	Active (kW)	P, total / per phase	- / -	■ / ■	■ / -	■ / ■
	Reactive (kVAR)	Q, total / per phase	- / -	■ / ■	■ / -	■ / ■
	Apparent (kVA)	S, total / per phase	- / -	■ / ■	■ / -	■ / ■
	Power factor and cos φ (fundamental)	PF and cos φ, total and per phase	-	■	-	■
Maximeters / minimeters						
	Associated with instantaneous rms measurements	Reset via Micrologic or FDM display unit	■	■	-	■
Energy metering						
Energy	Active (kW), reactive (kVARh), apparent (kVAh)	Total since last reset Absolute or signed mode (1)	-	■	■	■
Demand and maximum demand values						
Demand current (A)	Phases and neutral	Present value on the selected window	-	■	-	■
		Maximum demand since last reset	-	■	-	■
Demand power	Active (kWh), reactive (kVAR), apparent (kVA)	Present value on the selected window	-	■	-	■
		Maximum demand since last reset	-	■	-	■
Calculation window	Sliding, fixed or com-synchronised	Adjustable from 5 to 60 minutes in 1 minute steps (2)	-	■	-	-
Power quality						
Total harmonic distortion (%)	Of voltage with respect to rms value	THDU,THDV of the Ph-Ph and Ph-N voltage	-	■	-	■
	Of current with respect to rms value	THDI of the phase current	-	■	-	■

(1) Absolute mode: E absolute = E out + E in; Signed mode: E signed = E out - E in.
(2) Available via the communication system only.
(3) FDM121 only.

Additional technical characteristics

Measurement accuracy

Accuracies are those of the entire measurement system, including the sensors:

- *current: Class 1 as per IEC 61557-12*
- *voltage: 0.5 %*
- *power and energy: Class 2 as per IEC 61557-12*
- *frequency: 0.1 %.*

Operating-assistance functions
Micrologic 5 / 6 A or E trip units

PB103365.eps



Micrologic built-in LCD display.

DB125911.eps

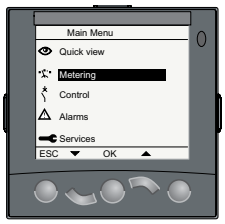

FDM121 display: navigation.

DB413152.eps

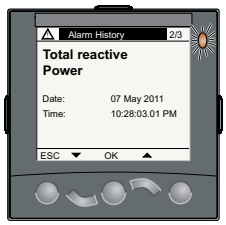

Overpower alarm.

DB413153.eps

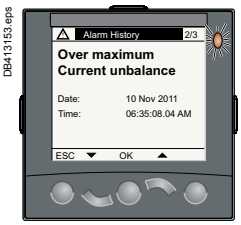

Phase unbalance alarm.

DB413154.eps

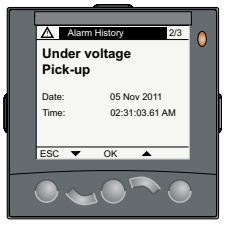

DB413155.eps

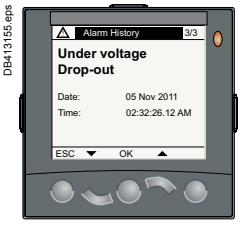

Alarm pick-up and drop-out.

Examples of operating-assistance screens on the FDM121 display unit.

Personalised alarms with time-stamping

Alarm types

The user can assign an alarm to all Micrologic A or E measurements or events:
- ■ up to 12 alarms can be used together:
- □ two alarms are predefined and activated automatically:
  - Micrologic 5: overload (Ir)
  - Micrologic 6: overload (Ir) and ground fault (Ig)
- □ thresholds, priorities and time delays can be set for ten other alarms.
- ■ the same measurement can be used for different alarms to precisely monitor certain values, e.g. the frequency or the voltage
- ■ alarms can also be assigned to various states: phase lead/lag, four quadrants, phase sequence
- ■ selection of display priorities, with pop-up possibility
- ■ alarm time-stamping.

Alarm settings

Alarms cannot be set via the keypad or the FDM121 display unit. They are set via communication with the PC. Set-up includes the threshold, priority, activation delay before display and deactivation delay. It is also possible to reprogram the standard assignment for the two SDx relay outputs to user-selected alarms.

Alarm reading

Remote alarm indications.
- ■ Reading on FDM121 display unit or on PC via the communication system.
- ■ Remote indications via SDx relay with two output contacts for alarms.

Histories and event tables

Micrologic A and E have histories and event tables that are always active.

Three types of time-stamped histories
- ■ Tripping due to overruns of Ir, Isd, Ii, Ig: last 17 trips
- ■ Alarms: last 10 alarms
- ■ Operating events: last 10 events

Each history record is stored with:
- ■ indications in clear text in a number of user-selectable languages
- ■ time-stamping: date and time of event
- ■ status: pick-up / drop-out

Two types of time-stamped event tables
- ■ Protection settings.
- ■ Minimeters / maximeters.

Display of alarms and tables

The time-stamped histories and event tables may be displayed on a PC via the communication system.

Embedded memory

Micrologic A and E have a non-volatile memory that saves all data on alarms, histories, event tables, counters and maintenance indicators even if power is lost.

Maintenance indicators

Micrologic A and E have indicators for, among others, the number of operating cycles, contact wear and operating times (operating hours counter) of the Compact NSX circuit breaker.
It is possible to assign an alarm to the operating cycle counter to plan maintenance.
The various indicators can be used together with the trip histories to analyse the level of stresses the device has been subjected to.
The information provided by the indicators cannot be displayed on the Micrologic LCD. It is displayed on the PC via the communication system.

Management of installed devices

Each circuit breaker equipped with a Micrologic 5 or 6 trip unit can be identified via the communication system:
- ■ serial number
- ■ firmware version
- ■ hardware version
- ■ device name assigned by the user.

This information together with the previously described indications provides a clear view of the installed devices.


PB105112.eps


PB108167.eps


PB111801-21_r.eps

Micrologic 5 / 6 operating assistance functions			Type		Display	
			A	E	Micrologic LCD	FDM display
Operating assistance						
Personalised alarms						
Settings	Up to 10 alarms assigned to all A and E measurements (2)		■	■	-	-
	Phase lead/lag, four quadrants, phase sequence, display priority selection (2)		-	■	-	-
Display	Alarms / tripping		■	■	- / ■	■ / ■
Remote indications	Activation of two dedicated contacts on SDx module		■	■	-	-
Time-stamped histories (ms)						
Trips (last 17)	Cause of tripping	Ir, Isd, Ii (Micrologic 5, 6)	■	■	-	■
		Ig (Micrologic 6)	■	■	-	■
		Phase fault	■	■	-	■
		Interrupted current value	■	■	-	■
Alarms (last 10)			■	■	-	■
Operating events (last 10)	Event types	Modification of protection setting by dial	-	■	-	■
		Opening of keypad lock	-	■	-	■
		Test via keypad	-	■	-	■
		Test via external tool	-	■	-	■
		Time setting (date and time)	-	■	-	■
		Reset for maximeter/minimeter and energy meter	■	■	-	■
Time stamping (date and time, text, status)			■	■	-	■
Time-stamped event tables						
Protection settings	Setting modified (value displayed)	Ir tr Isd tsd Ii Ig tg (2)	■	■	-	-
	Time-stamping	Date and time of modification (2)	■	■	-	-
	Previous value	Value before modification (2)	■	■	-	-
Min/Max	Values monitored	I1 I2 I3 IN	■	■	-	■
		U12 U23 U31 f	-	■	-	■
	Time-stamping of each value	Date and time of min/max record	■	■	-	■
	Current min/max value	Min/max value	■	■	-	■
Maintenance indicators						
Counter	Mechanical cycles (1)	Assignable to an alarm	■	■	-	■
	Electrical cycles (1)	Assignable to an alarm	■	■	-	■
	Trips	One per type of trip (2)	■	■	-	-
	Alarms	One for each type of alarm (2)	■	■	-	-
	Hours	Total operating time (hours) (2)	■	■	-	-
Indicator	Contact wear	%	■	■	-	■
Load profile	Hours at different load levels	% of hours in four current ranges: 0-49 % In, 50-79 % In, 80-89 % In and ≥ 90 % In	■	■	-	■

(1) The BSCM module (page A-33) is required for these functions.
(2) Available via the communication system only.

Additional technical characteristics

Contact wear

Each time Compact NSX opens, the Micrologic 5 / 6 trip unit measures the interrupted current and increments the contact-wear indicator as a function of the interrupted current, according to test results stored in memory. Breaking under normal load conditions results in a very slight increment. The indicator value may be read on the FDM121 display. It provides an estimation of contact wear calculated on the basis of the cumulative forces affecting the circuit breaker. When the indicator reaches 80 %, it is advised to replace the circuit breaker to ensure the availability of the protected equipment.

Circuit breaker load profile

Micrologic 5 / 6 calculates the load profile of the circuit breaker protecting a load circuit. The profile indicates the percentage of the total operating time at four current levels (% of breaker In):

- *0 to 49 % In*
- *50 to 79 % In*
- *80 to 89 % In*
- *≥ 90 % In.*

This information can be used to optimise use of the protected equipment or to plan ahead for extensions.

Switchboard-display functions
Micrologic A/E/P/H control unit with COM option (BCM ULP)

Micrologic measurement capabilities come into full play with the FDM121 switchboard display. It connects to COM option (BCM ULP) via a breaker ULP cord and displays Micrologic information. The result is a true integrated unit combining a circuit breaker and a Power Meter. Additional operating assistance functions can also be displayed.

PB103582-32.eps



FDM121 display.

PB103807-32.eps



Surface mount accessory.

PB103581-31.eps



Connection with FDM121 display unit.

FDM121 switchboard display

An FDM121 switchboard display unit can be connected to a ULP IMU using a prefabricated cord to display all measurements, alarms, histories and event tables, maintenance indicators, management of installed devices on a screen. The result is a veritable 96 x 96 mm Power Meter.
The FMD121 display unit requires a 24 V DC power supply.
The FDM121 is a switchboard display unit that can be integrated in the Compact NSX100 to 630 A, Powerpact H/J/L/P/R, compact NS or Masterpact systems. It uses the sensors and processing capacity of the Micrologic trip unit. It is easy to use and requires no special software or settings. It is immediately operational when connected to the Compact NSX by a simple cord.
Also, it provides monitoring and control with the use of the I/O application module, the motor mecanism module, or the Breaker Status module.
The FDM121 is a large display, but requires very little depth. The anti-glare graphic screen is backlit for very easy reading even under poor ambient lighting and at sharp angles.

Display of Micrologic measurements and alarms

The FDM121 is intended to display Micrologic 5 / 6 measurements, alarms and operating information. It cannot be used to modify the protection settings.
Measurements may be easily accessed via a menu. All user-defined alarms are automatically displayed. The display mode depends on the priority level selected during alarm set-up:
- high priority: a pop-up window displays the time-stamped description of the alarm and the orange LED flashes
- medium priority: the orange "Alarm" LED goes steady on
- low priority: no display on the screen.

All faults resulting in a trip automatically produce a high-priority alarm, without any special settings required. In all cases, the alarm history is updated. Micrologic saves the information in its non-volatile memory in the event of an FDM121 power failure.

Status indications and remote control

When the circuit breaker is equipped with the Breaker Status Module, the FDM121 display can also be used to view circuit breaker status conditions:
- O/F: ON/OFF
- SD: trip indication
- SDE: Fault-trip indication (overload, short-circuit, ground fault).

When the circuit breaker system is equipped with the I/O Application module, the FDM121 can monitor and control:
- craddle management
- circuit breaker operation
- light and load control
- custom application.

When the circuit breaker system is equipped with the motor mechanism module, the FDM121 offers remote closing and opening control.

Main characteristics

- 96 x 96 x 30 mm screen requiring 10 mm behind the door (or 20 mm when the 24 V power supply connector is used).
- White backlighting.
- Wide viewing angle: vertical ±60°, horizontal ±30°.
- High resolution: excellent reading of graphic symbols.
- Alarm LED: flashing orange for alarm pick-up, steady orange after operator reset if alarm condition persists.
- Operating temperature range -10 °C to +55 °C.
- CE / UL / CSA marking (pending).
- 24 V DC power supply, with tolerances 24 V -20 % (19.2 V) to 24 V +10 % (26.4 V).

When the FDM121 is connected to the communication network, the 24 V DC can be supplied by the communication system wiring system.
- Consumption 40 mA.

Mounting

The FDM121 is easily installed in a switchboard.
- Standard door cut-out 92 x 92 mm.
- Attached using clips.

To avoid a cut-out in the door, an accessory is available for surface mounting by drilling only two 22 mm diameter holes.
The FDM121 degree of protection is IP54 in front. IP54 is maintained after switchboard mounting by using the supplied gasket during installation.

Connection

The FDM121 is equipped with:
- a 24 V DC terminal block:
  - plug-in type with 2 wire inputs per point for easy daisy-chaining
  - power supply range of 24 V DC -20 % (19.2 V) to 24 V DC +10 % (26.4 V).

A 24 V DC type auxiliary power supply must be connected to a single point on the ULP system. The FDM121 display unit has a 2-point screw connector on the rear panel of the module for this purpose. The ULP module to which the auxiliary power supply is connected distributes the supply via the ULP cable to all the ULP modules connected to the system and therefore also to Micrologic.

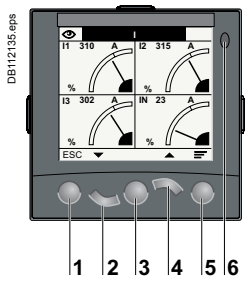

1 Escape
2 Down
3 OK
4 Up
5 Context
6 Alarm LED

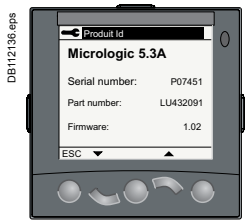

Product identification.

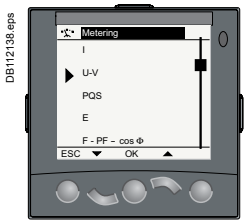

Metering: sub-menu.

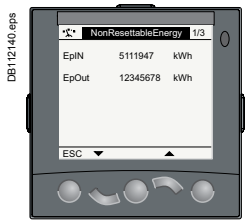

Metering: meter.

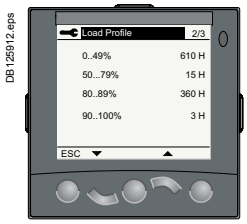

Services.

■ two RJ45 jacks.
The Micrologic connects to the internal communication terminal block on the Compact NSX via the breaker ULP cord. Connection to one of the RJ45 connectors on the FDM121 automatically establishes communication between the Micrologic and the FDM121 and supplies power to the Micrologic measurement functions.
When the second connector is not used, it must be fitted with a line terminator.

Navigation

Five buttons are used for intuitive and fast navigation.
The “Context” button may be used to select the type of display (digital, bargraph, analogue).
The user can select the display language (Chinese, English, French, German, Italian, Portuguese, Spanish, etc.).

Screens

Main menu

When powered up, the FDM121 screen automatically displays the ON/OFF status of the device.

Quick view
Alarms
Metering
Services.
Control

When not in use, the screen is not backlit. Backlighting can be activated by pressing one of the buttons. It goes off after 3 minutes.

Fast access to essential information

■ “Quick view” provides access to five screens that display a summary of essential operating information (I, U, f, P, E, THD, circuit breaker On / Off).

Access to detailed information

■ "Metering" can be used to display the measurement data (I, U-V, f, P, Q, S, E, THD, PF) with the corresponding min/max values.
■ Alarms displays active alarms and the alarm history.
■ Services provides access to the operation counters, energy and maximeter reset
■ function, maintenance indicators, identification of modules connected to the internal bus and FDM121 internal settings (language, contrast, etc.).

Communication components and FDM121 connections

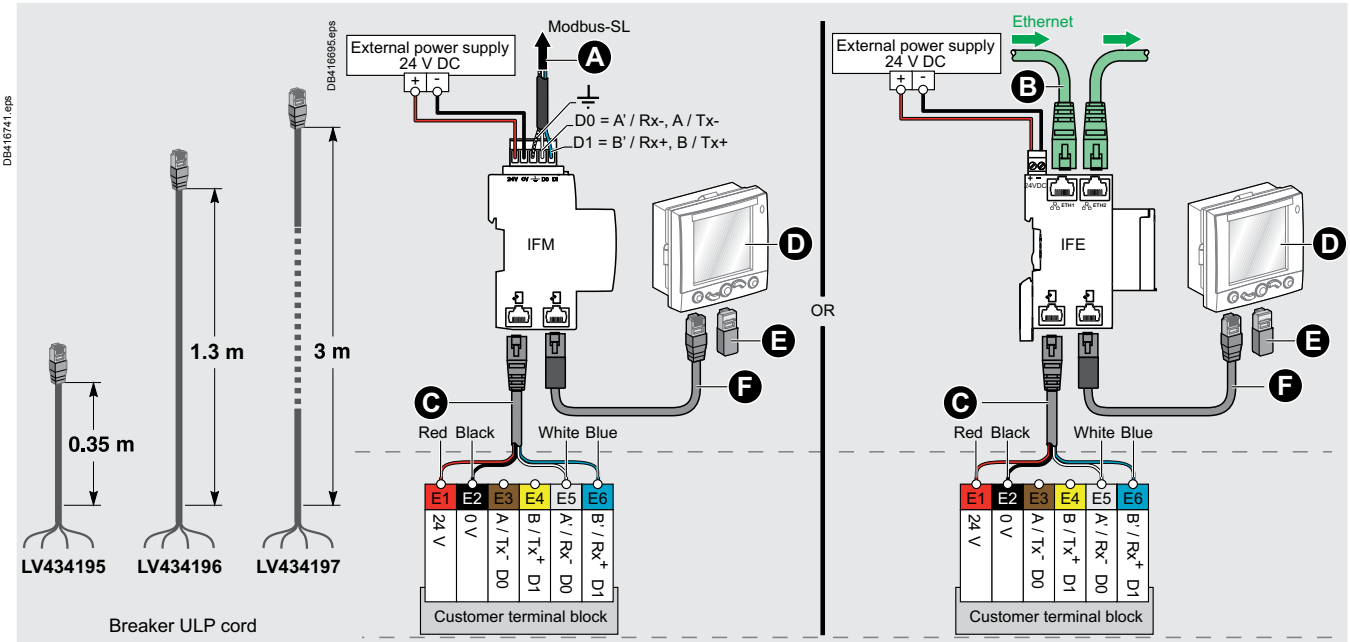

Connections
■ *Compact NSX is connected to the ULP devices (FDM121 display, IFM, IFE or IO) unit via the breaker ULP cord.*
□ *cord available in three lengths: 0.35 m, 1.3 m and 3 m.*
□ *lengths up to 10 m possible using extensions.*

A *Modbus network*
B *Ethernet network*
C *Breaker ULP cord*
D *FDM121 display*
E *ULP termination*
F *ULP cable*

Switchboard-display functions
Micrologic A/E/P/H control unit with COM Ethernet gateway

Micrologic measurement capabilities come into full play with the FDM128 switchboard display. It connects to Ethernet communication via RJ45 port and displays Micrologic information. The result is a true integrated unit combining a circuit breaker and a Power Meter. Additional operating assistance functions can also be displayed.



FDM128 display.



Surface mount accessory.



FDM128 switchboard display

The FDM128 switchboard display unit can be connected to a Micrologic COM option (BCM ULP via IFE). It uses the sensors and processing capacity of the Micrologic control unit. It is easy to use and requires no special software or settings.
The FDM128 is a large display, but requires very little depth. The anti-glare graphic screen is backlit for very easy reading even under poor ambient lighting and at sharp angles.

Display of Micrologic measurements and trips

The FDM128 is intended to display Micrologic A/E/P/H measurements, trips and operating information. It cannot be used to modify the protection settings.
Measurements may be easily accessed via a menu.
Trips are automatically displayed.
A pop-up window displays the time-stamped description of the trip.

Status indications

When the circuit breaker is equipped with the COM option (BCM ULP) (including its set of sensors) the FDM128 display can also be used to view circuit breaker status conditions:
- O/F: ON/OFF
- SDE: Fault-trip indication (overload, short-circuit, ground fault)
- PF: ready to close
- CH: charged (spring loaded).
- CE, CD, CT cradle management with I/O application module.

Remote control

When the circuit breaker is equipped with the COM option (BCM ULP) (including its kit for connection to XF and MX1 communication voltage releases), the FDM128 display can also be used to control (open/close) the circuit breaker.
Two operating mode are available:
- local mode : open/close commands are enabled from FDM128 while disable from communication network
- remote mode : open/close commands are disabled from FDM128 while, enabled from communication network.

Main characteristics

- 115.2 x 86.4 mm with 5.7" QVGA display 320 x 240 pixels.
- Color TFT LCD, LED backlight.
- Wide viewing angle: vertical ±80°, horizontal ±70°.
- High resolution: excellent reading of graphic symbols.
- Operating temperature range -10 °C to +55 °C.
- CE / UL / CSA marking (pending).
- 24 V DC power supply, with tolerances 24 V (limit 20.4 - 28.8 V DC).
- Consumption ≤ 6.8 W.

Mounting

The FDM128 is easily installed in a switchboard.
- Standard door hole Ø 22 mm.

The FDM128 degree of protection is IP65 in front and IP54.

Connection

The FDM128 is equipped with:
- a 24 V DC terminal block:
  - power supply range of 24 V DC (limit 20.4 - 28.8 V DC). The FDM128 display unit has a 2-point screw connector on the rear panel of the module for this purpose.
- One RJ45 Ethernet jacks.

The Micrologic connects to the internal communication terminal block on the Masterpact via the breaker ULP cord and Ethernet connection through IFE.

DB414405.eps

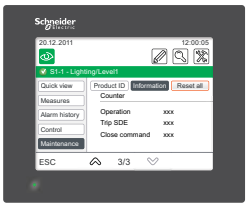

Product identification.

DB414407.eps

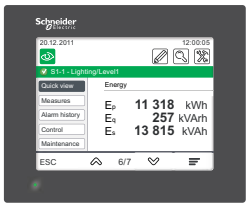

Metering: meter.

DB414408.eps

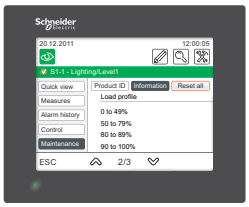

Services.

Navigation

Touch screen is used for intuitive and fast navigation.
The user can select the display language (Chinese, English, French, German, Italian, Portuguese, Spanish, etc.).

Screens

Main menu

Quick view
Alarms
Metering
Maintenance
Control

When not in use, the screen is automatically shifted to low back-lighting.

Fast access to essential information

■ “Quick view” provides access to five screens that display a summary of essential operating information (I, U, f, P, E, THD, circuit breaker On / Off).

Access to detailed information

■ "Metering" can be used to display the measurement data (I, U-V, f, P, Q, S, E, THD, PF) with the corresponding min/max values.
■ Alarms displays the trip history.
■ Services provides access to the operation counters, energy and maximeter reset function, maintenance indicators, identification of modules connected to the internal bus and FDM128 internal settings (language, contrast, etc.).

Enerlin'X communication system
Products overview

Enerlin'X communication system provides access to status, electrical values and devices control using Ethernet and Modbus SL communication protocols.

Ethernet has become the universal link between switchboards, computers and communication devices inside the building. The large amount of information which can be transferred makes the connection of Enerlin'X digital system to hosted web services of Schneider Electric a reality. More advantages are offered to integrators thanks to configuration web pages available remotely or on the local Ethernet network.

Modbus SL is the most widely used communication protocol in industrial networks. It operates in master-slave mode. The devices (slaves) communicate one after the other with a gateway (master).

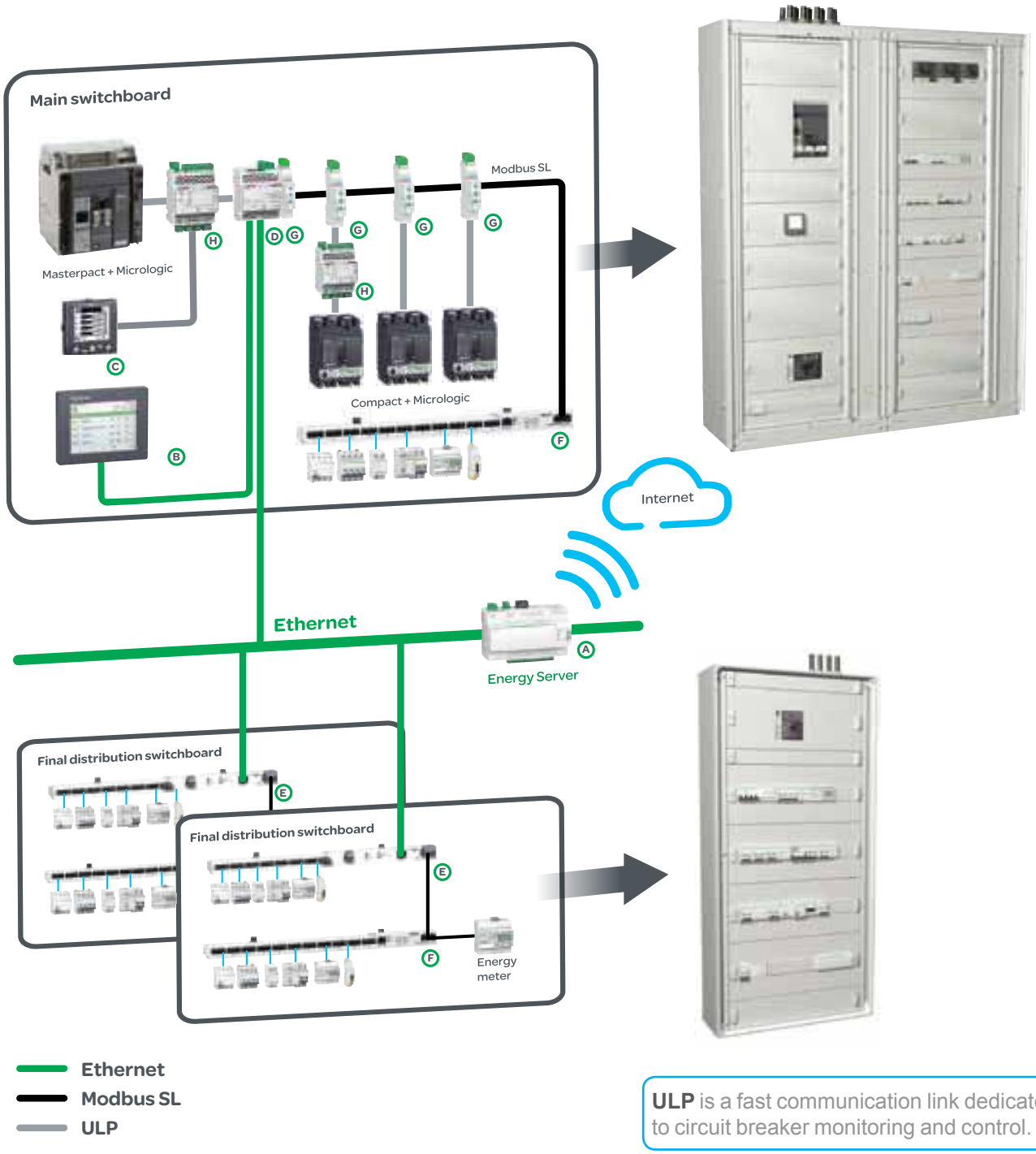

ULP is a fast communication link dedicated to circuit breaker monitoring and control.

Enerlin'X communication devices and displays

		Name	Function	Port		Bin. Input	Analogue Input	Bin. Output	Cial. Ref.
				(to device)	(to server)				
A		Com'X 200	Energy Server with Ethernet Gateway (1) function	Modbus Master	Ethernet cable + WiFi	6	2	-	**EBX200**
B		FDM128	Ethernet LCD colour touch screen	-	Ethernet	-	-	-	**FLV434128**
C		FDM121	LCD display for circuit breaker	ULP	-	-	-	-	**TRV00121**
D		IFE interface + gateway	Ethernet interface (2) & Gateway	Modbus Master & ULP	Ethernet	-	-	-	**LV434011**
		IFE interface	Ethernet interface for circuit breakers	ULP	Ethernet	-	-	-	**LV434010**
E		Acti 9 Smartlink Ethernet	Ethernet interface with Input/Output functions & Gateway	Modbus Master	Ethernet	14	2	7	**A9XMEA08**
F		Acti 9 Smartlink Modbus	Modbus interface with Input/Output functions	-	Modbus Slave	22	-	11	**A9XMSB11**
G		IFM	Modbus interface for circuit breaker	ULP	Modbus Slave	-	-	-	**TRV00210**
H		I/O	Input/Output application module for circuit breaker	ULP	ULP	6	-	3	**LV434063**

(1) Gateway: transfers data from a network to another (ie.: Modbus to Ethernet).
(2) Interface: transfers data from an equipment to a network.(ie.: ULP to Modbus).



Plug and play commissioning tools give a real peace of mind to panel builders as their panels can be functionally checked before delivery.

Commissioning / maintenance tools

Web pages embedded into Com'X 200 and Acti 9 Smartlink Ethernet gateways

Access with a standard PC and common browser:
- commissioning,
- communication diagnosis,
- functional tests…

Electrical Asset Manager

Loaded into a standard PC Error free commissioning. Time saving, easier management and maintenance thanks to the advanced services:
- project management,
- configuration of controllers, gateways, …
- test of communication networks, diagnostic report…

Communication
Communication wiring system

PB108180.eps

Wiring system ULP
The wiring system is designed for low-voltage power switchboards. Installation requires no tools or special skills.
The prefabricated wiring ensures both data transmission (Modbus protocol) and 24 V DC power distribution for the communications modules on the Micrologic control units.

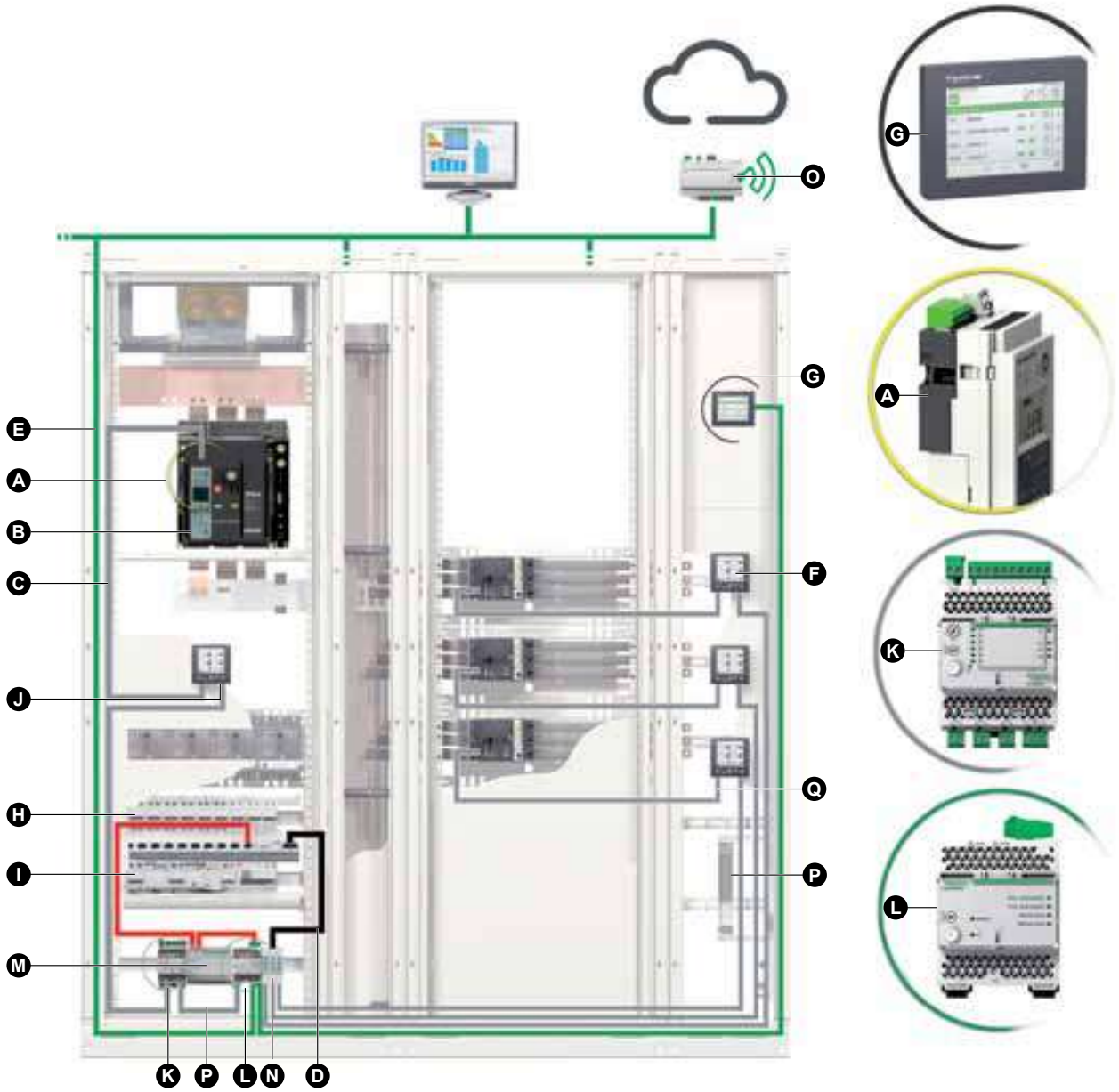

A BCM ULP: Breaker Communication Module with ULP port		
B Micrologic control unit		
C Breaker ULP cord	0.35 m	LV434195
	1.3 m	LV434196
	3 m	LV434197
D Modbus cable		
E Ethernet cable		
F FDM121: Front Display Module		TRV00121
G FDM128: Front Display Module		LV434128
H Smart Link		A9XMSB11
I Acti9		
J ULP line terminators		TRV00880
K Input/Output interface		LV434063
L IFE: Ethernet interface		LV434010 or LV434011
M External 24 V DC power supply module		
N IFM: Modbus-SL interface		TRV00210
O Com'X 200		
P ULP cable	0.3 m	TRV00803
	0.6 m	TRV00806
	1 m	TRV00810
	2 m	TRV00820
	3 m	TRV00830
	5 m	TRV00850
Q NSX cord	0.35 m	LV434200
	1.3 m	LV434201
	3 m	LV434202

Ethernet
Modbus
ULP
24 V DC

Available information and functions



PB103260_A23Peps PB103265_E4Peps

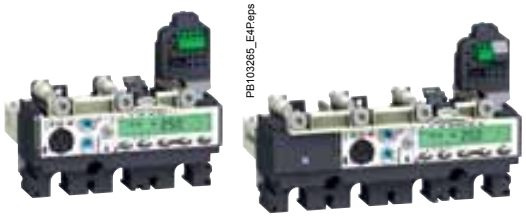

Micrologic trip units for 3 poles, 4 poles Compact NSX circuit breakers.

Available functions	Micrologic type	
Status indications		
ON/OFF (O/F)	A	E
Spring charged CH	A	E
Ready to close	A	E
Fault-trip SDE	A	E
Connected / disconnected / test position CE/CD/CT (CCM only)	A	E
Controls		
MX1 open	A	E
XF close	A	E
Measurements		
Instantaneous measurement information	A	E
Averaged measurement information		E
Maximeter / minimeter	A	E
Energy metering		E
Demand for current and power		E
Power quality		
Operating assistance		
Protection and alarm settings		
Histories		E
Time stamped event tables		
Maintenance indicators	A	E

Embedded trip unit and communication module

DB406756.eps



Micrologic trip unit

All Compact circuit breakers are equipped with a Micrologic trip unit. This adjustable unit is mainly designed for tripping the circuit breaker in case of necessity and monitoring the downstream circuit. Alarms may be programmed for remote indications. Electrical measurements, operation data for predictive maintenance, are provided for local display or distant monitoring.

PB103786.eps

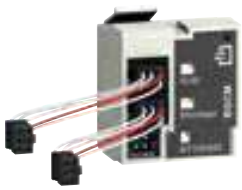

BSCM module.

BSCM module

Functions

The optional BSCM Breaker Status & Control Module is used to acquire device status indications and control the communicating remote-control function.
It includes a memory used to manage the maintenance indicators.

Status indications

Indication of device status:
O/F, SD and SDE.

Maintenance indicators

The BSCM module manages the following indicators:
- mechanical operation counter
- electrical operation counter
- history of status indications.

It is possible to assign an alarm to the operation counters.

Controls

The module can be used to carry out communicating remote control operations: (open, close and reset) in different modes (manual, auto).

Mounting

The BSCM module can be installed on all Compact NSX circuit breakers and switch-disconnectors. It simply clips into the auxiliary contact slots. It occupies the slots of one O/F contact and one SDE contact. The BSCM is supplied with 24 V DC power automatically via the NSX cord when the communication system is installed.

IFE Ethernet interface

PB112059-55.eps



IFE interface, ref.: LV434010

DB416830.eps



IFE interface + gateway, ref.: LV434011

DB406743.eps



IFE interface, IFE interface + gateway description

Introduction

The IFE interface and IFE interface + gateway enable LV circuit breakers as Masterpact NT/NW, Compact NSX or Powerpact to be connected to an Ethernet network.

IFE interface: ref. LV434010

Provides an Ethernet access to a single LV circuit breaker.

Function

Interface - one circuit breaker is connected to the IFE interface via its ULP port.

IFE interface + gateway: ref. LV434011

Provides an Ethernet access to one or several LV circuit breakers.

Functions

- Interface - one circuit breaker is connected to the IFE interface via its ULP port.
- Gateway: several circuit breakers on a Modbus network are connected via the IFE interface + gateway master Modbus port.

IFE interface, IFE interface + gateway features

- Dual 10/100 Mbps Ethernet port for simple daisy chain connection.
- Device profile web service for discovery of the IFE interface, IFE interface + gateway on the LAN.
- ULP compliant for localisation of the IFE interface in the switchboard.
- Ethernet interface for Compact, Masterpact and Powerpact circuit breakers.
- Gateway for Modbus-SL connected devices (IFE interface + gateway only).
- Embedded set-up web pages.
- Embedded monitoring web pages.
- Embedded control web pages.
- Built-in e-mail alarm notification.

Mounting

The IFE interface, IFE interface + gateway are DIN rail mounting devices. A stacking accessory enables the user to connect several IFMs (ULP to Modbus interfaces) to an IFE interface + gateway without additional wiring.

24 V DC power supply

The IFE interface, IFE interface + gateway must always be supplied with 24 V DC. The IFMs stacked to an IFE interface + gateway are supplied by the IFE interface + gateway, thus it is not necessary to supply them separately. It is recommended to use an UL listed and recognised limited voltage/limited current or a class 2 power supply with a 24 V DC, 3 A maximum.

IFE interface, IFE interface + gateway firmware update

The firmware can be updated using:

- FTP
- customer engineering tool.

Required circuit breaker communication modules

The connection to IFE interface or IFE interface + gateway requires a communication module embedded into the circuit breaker:

- Compact NSX: NSX cord and/or BSCM module

The insulated NSX cord is mandatory for system voltages greater than 480 V AC. When the second ULP RJ45 connector is not used, it must be closed with an ULP terminator (TRV00880).

Network communication interface

Characteristic		Value
Type of interface module		Modbus RTU, RS485 serial connection Modbus TCP/IP Ethernet
Transmission	Modbus RS485	Transfer rate: 9,600...19,200 Baud Medium Double shielded twisted pair Impedance 120 Ω
	Ethernet	Transfer rate : 10/100 Mbps Medium STP, Cat5e, straight cable
Structure	Type	Modbus, Ethernet
	Method	Master/Slave
Device type	Modbus	Master
	Ethernet	Server
Turnaround time	Modbus	10 ms
	Ethernet	1 ms
Maximum length of cable	Modbus	1000 m
	Ethernet	100 m
Type of bus connector	Modbus	4-pin connector
	Ethernet	RJ45 (Shielded)

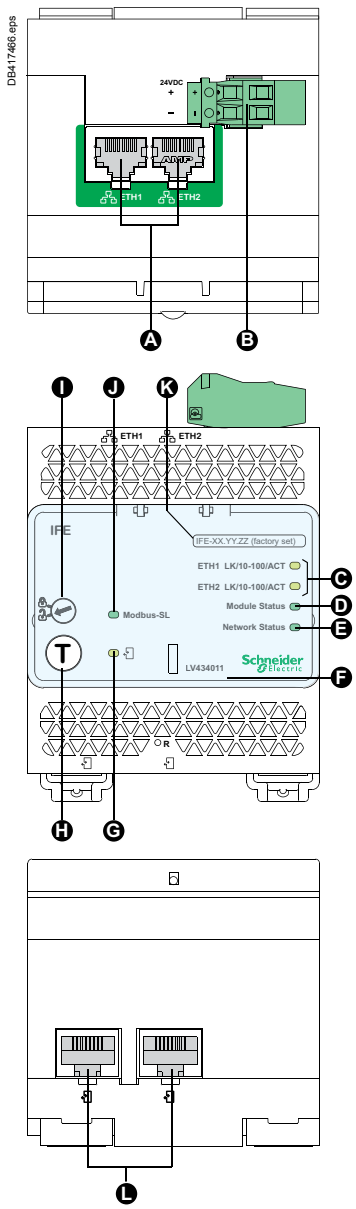

A *Ethernet 1 and Ethernet 2 communication port.*

B *24 V DC power supply terminal block.*

C *Ethernet communication LEDs:*
- *yellow: 10 Mb*
- *green: 100 Mb.*

D *Module status LED:*
- *steady off: no power*
- *steady green: device operational*
- *steady red: major fault*
- *flashing green: standby*
- *flashing red: minor fault*
- *flashing green/red: self-test.*

E *Network status LED:*
- *steady off: not power/no valid IP address*
- *steady green: connected, valid IP address*
- *steady orange: default IP address*
- *steady red: duplicated IP address*
- *flashing green/red: Self-test.*

F *Sealable transparent cover.*

G *ULP status LED.*

H *Test button (accessible closed cover).*

I *Locking pad.*

J *Modbus traffic status LED (LV434011 only).*

K *Device name label.*

L *ULP ports.*

General characteristics

Environmental characteristics	
Conforming to standards	UL 508, UL 60950, IEC 60950, 60947-6-2
Certification	cUIUs, GOST, FCC, CE
Ambient temperature	-20 to +70 °C (-4 to +158 °F)
Relative humidity	5–85 %
Level of pollution	Level 3
Flame resistance	ULV0
Mechanical characteristics	
Shock resistance	1000 m/s2
Resistance to sinusoidal vibrations	-5 Hz < f < 8.4 Hz
Electrical characteristics	
Resistance to electromagnetic discharge	Conforming to IEC/EN 61000-4-3
Immunity to radiated fields	10 V/m
Immunity to surges	Conforming to IEC/EN 61000-4-5
Consumption	120 mA at 24 V input
Physical characteristics	
Dimensions	72 x 105 x 71 mm (2.83 x 4.13 x 2.79 in.)
Mounting	DIN rail
Weight	182.5 g (0.41 lb)
Degree of protection of the installed IO	■ On the front panel (wall mounted enclosure): IP4x ■ Connectors: IP2x ■ Other parts: IP3x
Connections	Screw type terminal blocks
Technical characteristics - 24 V DC power supply	
Power supply type	Regulated switch type
Rated power	72 W
Input voltage	100–120 V AC for single phase 200–500 V AC phase-to-phase
PFC filter	With IEC 61000-3-2
Output voltage	24 V DC
Power supply out current	3 A

Note: *it is recommended to use an UL listed/UL listed recognised limited voltage/Limited current or a class 2 power supply with a 24 V DC, 3 A maximum.*

IFE web page description

Monitoring web page	
Real time data 67	■
Device logging	■
Control web page	
Single device control	■
Diagnostics web page	
Statistics	■
Device information	■
IMU information	■
Read device registers	■
Communication check	■
Maitenance web page	
Maintenance log	■
Maintenance counters	■
Setup web page	
Device localisation/name	■
Ethernet configuration (dual port)	■
IP configuration	■
Modbus TCP/IP filtering	■
Serial port	■
Date and time	■
E-mail server configuration	■
Alarms to be e-mailed	■
Device list	■
Device logging	■
Device log export	■
SNMP parameters	■
Documentation links	■
Preferences	■
Advanced services control	■
User accounts	■
Web page access	■

IFM Modbus communication interface

PB103798-50.eps



IFM Modbus communication interface.
Ref.: TRV00210.

Function

A IFM - Modbus communication interface - is required for connection of a Masterpact or Compact to a Modbus network as long as this circuit breaker is provided with a ULP (Universal Logic Plug) port. The port is available on respectively a BCM ULP or BSCM embedded module.

The IFM is defined as an IMU (Intelligent Modular Unit) in the ULP connection System documentation.

Once connected, the circuit breaker is considered as a slave by the Modbus master. Its electrical values, alarm status, open/close signals car be monitored or controlled by a Programmable Logic Controller or any other system.

Characteristics

ULP port

2 RJ45 sockets, internal parallel wiring.
- Connection of a single circuit breaker (eventually via its I/O application module).
- A ULP line terminator or an FDM121 display unit must be connected to the second RJ45 ULP socket.

The RJ45 sockets deliver a 24 VDC supply fed from the Modbus socket.
Built-in test function, for checking the correct connection to the circuit breaker and FDM121 display unit.

Modbus slave port

- Top socket for screw-clamp connector, providing terminals for:
  - 24 VDC input supply (0 V, +24 V)
  - Modbus line (D1, D2, Gnd).
- Lateral socket, for Din-rail stackable connector.

Both top and lateral sockets are internally parallel wired.
- Multiple IFM can be stacked, thus sharing a common power supply and Modbus line without individual wiring.
- On the front face:
  - Modbus address setting (1 to 99): 2 coded rotary switches
  - Modbus locking pad: enables or disable the circuit breaker remote control and modification of IFM parameters.
- Self adjusting communication format (Baud rate, parity).

DB417545.eps

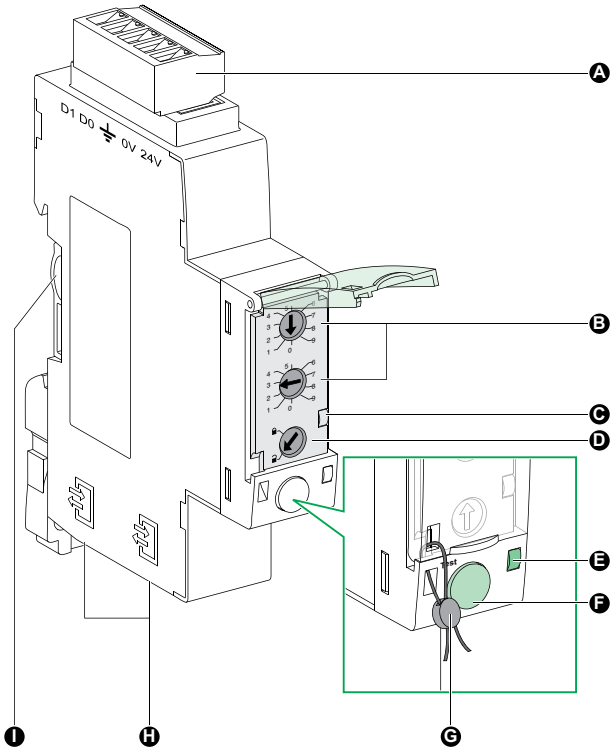

- **A** *Modbus screw clamp connector.*
- **B** *Modbus address switches.*
- **C** *Modbus traffic LED.*
- **D** *Modbus locking pad.*
- **E** *ULP activity LED.*
- **F** *Test button.*
- **G** *Mechanical lock.*
- **H** *ULP RJ45 connectors.*
- **I** *Stacking accessory connection.*

Technical characteristics

IFM Modbus communication interface		
Dimensions		18 x 72 x 96 mm
Maximum number of stacked IFM		12
Degree of protection of the installed module	Part projecting beyond the escutcheon	IP4x
	Other module parts	IP3x
	Connectors	IP2x
Operating temperature		-25...+70 °C
Power supply voltage		24 V DC -20 %/+10 % (19.2...26.4 V DC)
Consumption	Typical	21 mA/24 V DC at 20 °C
	Maximum	30 mA/19.2 V DC at 60 °C
Certification		
CE		IEC/EN 60947-1
UL		UL 508 - Industrial Control Equipment
CSA		No. 142-M1987 - Process Control Equipment ■ CAN/CSA C22.2 No. 0-M91 - General requirements - Canadian Electrical Code Part ■ CAN/CSA C22.2 No. 14-05 - Industrial Control Equipment

Simplified IFM installation

Staking IFM

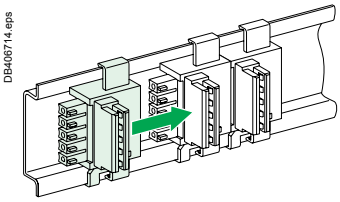

Stacking accessories

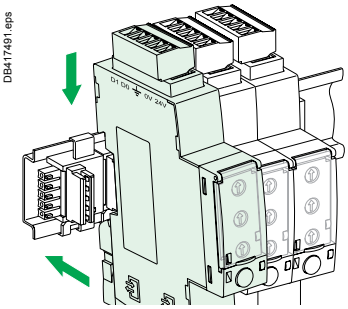

Up to 12 stacked IFM

Stacking an IFE interface + gateway with IFMs

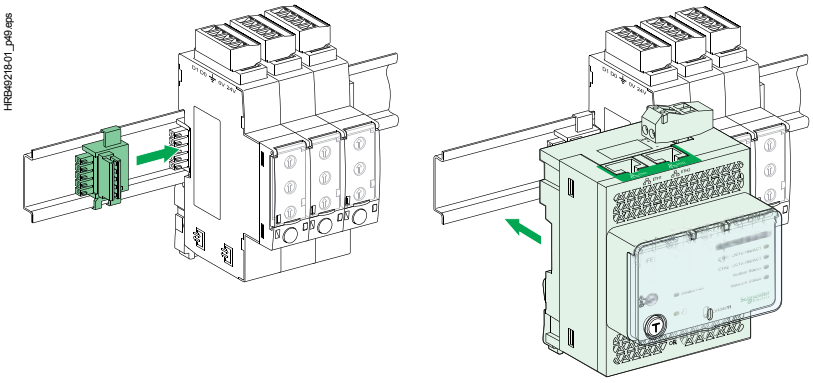

I/O application module

DB416829.eps



Description

The IO input/output application module for LV breaker is part of an ULP system with built-in functionalities and applications to enhance the application needs. The ULP system architecture can be built without any restrictions using the wide range of circuit breakers.
The IO application is compliant with the ULP system specifications.
Two IO application module can be connected in the same ULP network.

The ranges of LV circuit breakers enhanced by the I/O are:
- Masterpact NW
- Masterpact NT
- Compact NS1600b-3200
- Compact NS630b-1600
- Compact NSX100-630 A.

IO input/output interface for LV breaker resources

The IO application module ressources are:
- 6 digital inputs that are self powered for either NO and NC dry contact or pulse counter
- 3 digital outputs that are bistable relay (5 A maximum)
- 1 analogue input for Pt100 temperature sensor.

Pre-defined applications

Pre-defined application adds new functions to the IMU in a simple way:
- selection by the application rotary switch on the IO, defining the application with pre-defined input/output assignment and wiring diagram.
- no additional setting with the customer engineering tool required.

The resources not assigned to the pre-defined application are free for additional user-defined applications:
- cradle management
- breaker operation
- light and load control
- custom.

User-defined applications

User-defined applications are processed by the IO in addition to the pre-defined application selected.
The user-defined applications are available depending on:
- the pre-defined application selected
- the IO resources (inputs and outputs) not used by the application.

The resources required by user-defined applications are assigned using the customer engineering tool:
- protection
- control
- energy management
- monitoring.

Mounting

The IO is a DIN rail mounting device.

DB416827.eps

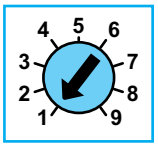

Application rotary switch

The application rotary switch enables the selection of the pre-defined application.
It has 9 positions and each position is assigned to a pre-defined application.
The factory set position of the switch is pre-defined application 1.

DB416828.eps

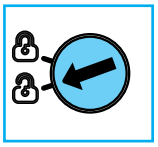

DB416828.eps

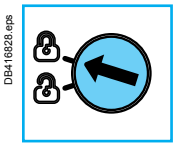

Setting locking pad

The setting locking pad on the front panel of the IO enables the setting of the IO by the customer engineering tool.

DB417467.eps

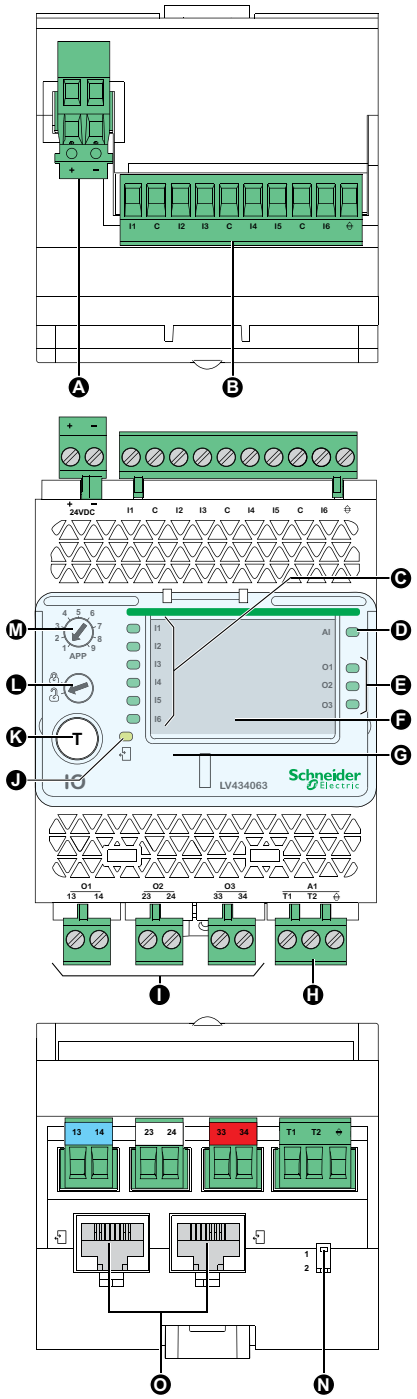

A *24 V DC power supply terminal block.*
B *Digital input terminal block: 6 inputs, 3 commons and 1 shield.*
C *6 input status LEDs.*
D *Analogue input status LED.*
E *3 output status LEDs.*
F *I/O identification labels.*
G *Sealable transparent cover.*
H *Analogue input terminal block.*
I *Digital output terminal blocks.*
J *ULP status LED.*
K *Test/reset button (accessible with cover closed).*
L *Setting locking pad.*
M *Application rotary switch: 1 to 9.*
N *Switch for IO addressing (IO 1 or IO 2).*
O *ULP connectors.*

General characteristics

Environmental characteristics

Conforming to standards	UL 508, UL 60950, IED 60950, 60947-6-2
Certification	cUIUs, GOST, FCC, CE
Ambient temperature	-20 to +70 °C (-4 to +158 °F)
Relative humidity	5–85 %
Level of pollution	Level 3
Flame resistance	ULV0

Mechanical characteristics

Shock resistance	1000 m/s2
Resistance to sinusoidal vibrations	-5 Hz < f < 8.4 Hz

Electrical characteristics

Resistance to electromagnetic discharge	Conforming to IEC/EN 61000-4-3
Immunity to radiated fields	10 V/m
Immunity to surges	Conforming to IEC/EN 61000-4-5
Consumption	165 mA

Physical characteristics

Dimensions	71.7 x 116 x 70.6 mm (2.83 x 4.56 x 2.78 in.)
Mounting	DIN rail
Weight	229.5 g (0.51 lb)
Degree of protection of the installed IO	■ On the front panel (wall mounted enclosure): IP4x ■ IO parts: IP3x ■ Connectors: IP2x
Connections	Screw type terminal blocks

Technical characteristics - 24 V DC power supply

Power supply type	Regulated switch type
Rated power	72 W
Input voltage	100–120 V AC for single phase 200–500 V AC phase-to-phase
PFC filter	With IEC 61000-3-2
Output voltage	24 V DC
Power supply out current	3 A

Note: *it is recommended to use an UL listed/UL listed recognised limited voltage/Limited current or a class 2 power supply with a 24 V DC, 3 A maximum.*

Digital inputs

Digital input type	Self powered digital input with current limitations as per IEC 61131-2 type 2 standards (7 mA)
Input limit values at state 1 (close)	19.8–25.2 V DC, 6.1–8.8 mA
Input limit values at state 0 (open)	0–19.8 V DC, 0 mA
Maximum cable length	10 m (33 ft)

Note: *for a length greater than 10 m (33 ft) and up to 300 m (1,000 ft), it is mandatory to use a shielded twisted cable. The shield cable is connected to the IO functional ground of the IO.*

Digital outputs

Digital output type	Bistable relay
Rated load	5 A at 250 V AC
Rated carry current	5 A
Maximum switching voltage	380 V AC, 125 V DC
Maximum switch current	5 A
Maximum switching power	1250 VA, 150 W
Minimum permissible load	10 mA at 5 V DC
Contact resistance	30 mΩ
Maximum operating frequency	■ 18000 operations/hr (Mechanical) ■ 1800 operations/hr (Electrical)
Digital output relay protection by an external fuse	External fuse of 5 A or less
Maximum cable length	10 m (33 ft)

Analogue inputs

The IO analogue input can be connected to a Pt100 temperature sensor

Range	-30 to 200 °C	-22 to 392 °F
Accuracy	±2 °C from -30 to 20 °C ±1 °C from 20 to 140 °C ±2 °C from 140 to 200 °C	±3.6 °F from -22 to 68 °F ±1.8 °F from 68 to 284 °F ±3.6 °F from 284 to 392 °F
Refresh interval	5 s	5 s

Communication
Communications modules, IFM and IFE

All Compact NSX devices can be equipped with the communication function via a prewired connection system and a Modbus or Ethernet network interface. The interface can be connected directly or via the FDM121 switchboard display unit. Four functional levels can be combined to adapt to all supervision requirements.

Four functional levels

The Compact NSX can be integrated in a Modbus or Ethernet communication environment. Four functional levels can be used separately or combined.

Communication of status indications

This level is compatible with all Compact NSX circuit breakers, whatever the trip unit, and with all switch-disconnectors. Using the BSCM module, the following information is accessible:

- ON/OFF position (O/F)
- trip indication (SD)
- fault-trip indication (SDE).

Communication of commands

Also available on all circuit breakers and switch-disconnectors, this level (communicating remote control) can be used to:

- open
- close
- reset.

Communication of measurements with Micrologic 5 / 6 A or E

This level provides access to all available information:

- instantaneous values A, E
- demand values E
- maximeters/minimeters A, E
- energy metering E
- demand current and power E
- power quality E.

Communication of operating assistance with Micrologic 5 / 6 A or E

- protection and alarm settings A, E
- time-stamped histories A, E
- event tables A, E
- maintenance indicators A, E.

Modbus principle

The Modbus RS 485 (RTU protocol) system is an open bus on which communicating Modbus devices (Compact NS with Modbus COM, Power Meter PM700, PM800, Sepam, Vigilohm, Compact NSX, etc.) are installed. All types of PLCs and microcomputers may be connected to the bus.

Addresses

The Modbus communication parameters (address, baud rate, parity) are entered using the keypad on the Micrologic A, E, P, H. For a switch-disconnector, it is necessary to use the Electrical Asset Manager or RSU (Remote Setting Utility) Micrologic utility.

Number of devices

The maximum number of devices that may be connected to the Modbus bus depends on the type of device (Compact with Modbus COM, PM700, PM800, Sepam, Vigilohm, Compact NSX, etc.), the baud rate (19200 is recommended), the volume of data exchanged and the desired response time. The RS 485 physical layer offers up to 32 connection points on the bus (1 master, 31 slaves).
A fixed device requires only one connection point (communication module on the device). A drawout device uses two connection points (communication modules on the device and on the chassis).
The number must never exceed 31 fixed devices or 15 drawout devices.

Length of bus

The maximum recommended length for the Modbus bus is 1200 meters.

Bus power source

A 24 V DC power supply is required (less than 20 % ripple, insulation class II).

Ethernet principle

Ethernet is a data link and physical layer protocol defined by IEEE 802 10 and 100 Mbps specifications that connects computer or other Ethernet devices. Ethernet is an asynchronous Carrier Sense Multiple Access with Collision detection (referred as CSMA/CD) protocol. Carrier Sense means that the hosts can detect whether the medium (coaxial cable) is idle or busy. Multiple Access means that multiple hosts can be connected to the common medium. Collision Detection means a host detects whether its transmission has collided with the transmission of another host (or hosts). IFE Ethernet interface can be connected to a PC or a laptop over Ethernet. The maximum length of Ethernet cable is 100 meters. IFE Ethernet interface + gateway provides a Modbus TCP/IP gateway over Ethernet to enable Modbus TCP communication from a Modbus TCP master to any Modbus slave devices connected to it. The maximum active Modbus TCP client connection is twelve.
IFE Ethernet interface has an embedded web server (web page).
The Modbus RS 485 (RTU protocol) system is an open bus on which communicating Modbus devices (Compact NS with Modbus COM, Power Meter PM700, PM800, Sepam, Vigilohm, Compact NSX, etc.) are installed. All types of PLCs and microcomputers may be connected to the bus.

Connections

■ *Compact NSX is connected to the I/O application module or FDM121 display unit via the internal terminal block for the NSX cord equipped with an RJ45 connector:*

□ *cord available in three lengths: 0.35 m, 1.3 m and 3 m.*

□ *insulated 1.3 m version for installations > 480 V AC*

□ *lengths up to 10 m possible using extensions.*

■ *The FDM121 display unit and the I/O application module are connected to:*

□ *the IFM Modbus interface by a communication cable with RJ45 connectors on both ends*

or

□ *the IFE Ethernet interface module by a communication cable with RJ45 connectors on both ends.*

DB416931.eps

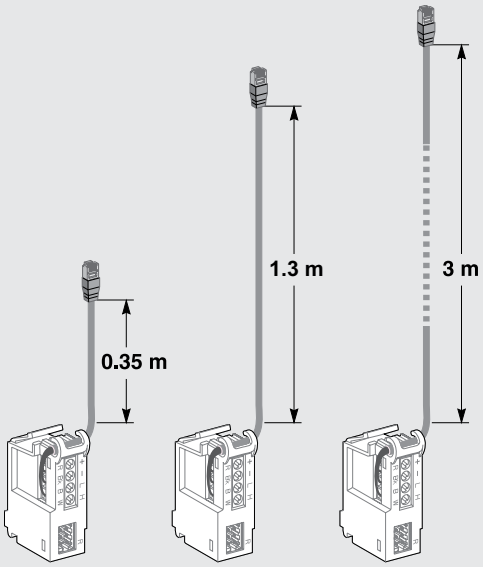

Communication components and connections, IFM

DB416932.eps

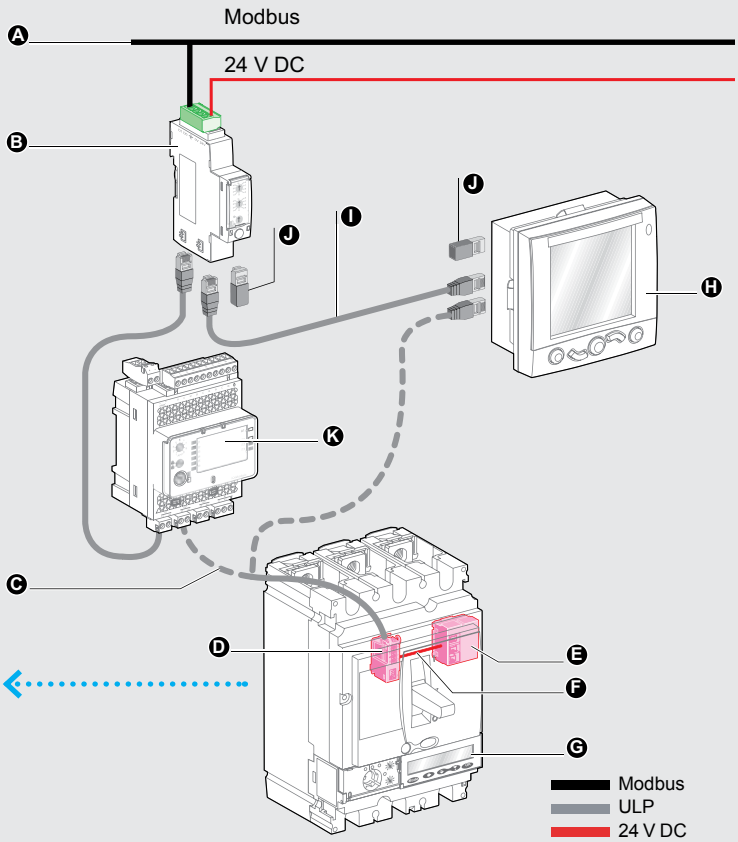

Communication components and connections, IFE

DB417014.eps

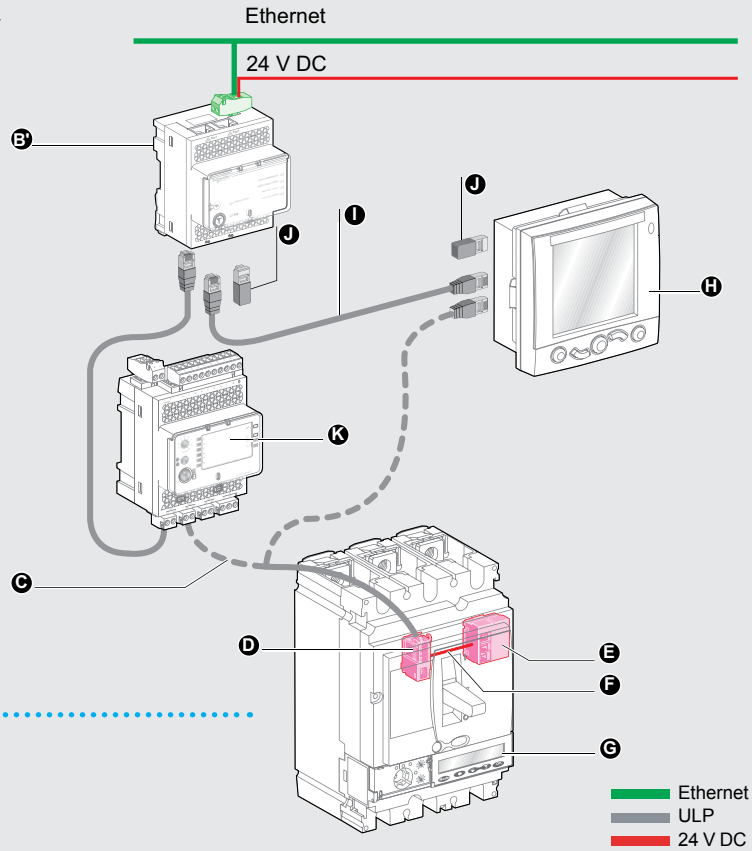

- A *Modbus network*
- B *IFM Modbus interface*
- B' *IFE Ethernet interface module*
- C *NSX cord*
- D *Internal terminal block for communication via NSX cord*
- E *BSCM module*
- F *Prefabricated wiring*
- G *Micrologic trip unit*
- H *FDM121 display*
- I *RJ45 cable*
- J *Line terminator (on unused connector if applicable)*
- K *I/O application module*

Electrical Asset Manager
Configuration Engineering tool

Capture1b.eps



Introduction

Electrical Asset Manager is a software application that helps the user to manage a project as part of designing, testing, site commissioning, and maintenance of the project life cycle.
It enables the user to prepare the settings of the devices offline (without connecting to the device) and configure them when connected with the devices.
Also it provides lot of other value added features for the user to manage the project such as, safe repository in cloud, attach artifacts to each device or at the project level, organise devices in switchboard wise, manage a hierarchical structure of the installation etc.

Capture2b.eps



Compatible devices (configuration and device management)

Electrical Asset Manager is compatible with the following devices:
- Compact NSX100-630 (IEC)
- PowerPactTM (UL) circuit breaker
- Compact NS630b-3200 (IEC)
- Masterpact NT/NW (IEC and UL) circuit breaker
- Acti9 Smartlink.
- Compatible devices (Device Management in the project)
- Switch disconnectors (Compact NSX, Masterpact & PowerPact Family)
- Third party devices.

References:
Electrical Asset Manager software package can be downloaded from our website www.schneider-electric.com.

Capture3b.eps



Features

Electrical Asset Manager supersedes the Schneider Electric customer engineering tools such as Remote setting Utility (RSU) and Remote Control Utility (RCU) with additional features.

Electrical Asset Manager supports the connection of Schneider Electric communicable devices to:
- create projects by device discovery, selection of devices, and import Bill of Material (BOM)
- monitor the status of protection and IO status
- read information (alarms, measurements, parameters)
- check protection discrimination between two devices
- upload and download of configuration or settings in batch mode to multiple devices.
- carry out commands and tests
- generate and print device settings report and communication test report
- manage multiple devices with electrical and communication hierarchy model
- manage artifacts (project documents)
- check consistency in settings between devices on a communication network
- compare configuration settings between PC and device (online)
- download latest firmware.

Capture4b.eps

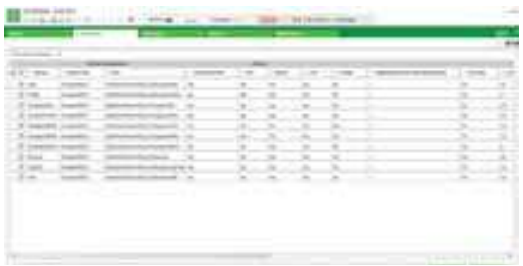

Electrical Asset Manager enables the user to avail the advanced features of the software once the project is saved in Schneider Electric cloud.

Capture6b.eps



Capture6b.eps



Capture7b.eps



Capture8b.eps



Functions

Offline Mode

A project can be built in offline mode through 2 different ways:

- through BOM file import
- through Device Selection.

Additionally, the user can open an existing project and modify the settings offline. The user can do the discrimination curve check and firmware compatibility check for devices in the project.

Online Mode

A project can be built in online mode through device discovery also other than the methods possible through offline method.
Once the project is built, the following functions can be performed in addition to the functions available in offline mode:

- compare the device parameters with project parameters
- load parameters from project to the device and vice versa
- firmware downloads to the device
- monitor the measurement, maintenance, device status and I/O status
- control functions.

User Interface

Electrical Asset Manager software provides fast direct access to the project and the devices in the project through different tabs.

- Project: to provide the project information including customer details, project references and to add project artifacts (documents related to the project).
- Configuration: to build up the tree structure of the project architecture ; to have a table view of the devices added in the project ; to set the parameters of the devices ; to transfer the device settings ; to view the tripping curves; to attach device artifacts and to download the latest firmware, to do the communication test for all the devices and generate the test report.
- Monitoring: this allows the user to monitor the real time values of different devices through different sub tabs namely Monitoring, Logs and Control.
- Reports: report tab allows you to generate and print a report of the project settings from the report tab. The user details and project characteristics are automatically filled with the details entered in the Project page.

Accessories for Micrologic trip units

PB105129.eps



External neutral current transformers.

PB103842-47.eps



External neutral voltage tap (cat. no. LV434208).

PB105115.eps



External 24 V DC power-supply module.

External neutral current transformer (ENCT)

The external transformer is a sensor required for a three-pole circuit breaker in a system with a distributed neutral to measure the neutral current in order to:
- protect the neutral conductor
- protect against insulation faults.

This current transformer can be connected to Micrologic 5 / 6 trip units. The transformer rating must be compatible with that of the circuit breaker.

Required current transformers for different circuit breaker models

Type of circuit breaker	Rating	Catalogue number
NSX100/160/250	25 – 100 A	**LV429521**
	150 – 250 A	**LV430563**
NSX400/630	400 – 630 A	**LV432575**

External neutral voltage tap (ENVT)

The neutral voltage transformer is required for Micrologic E power metering with a three-pole circuit breaker in a system with a distributed neutral. It is used to connect the neutral to the Micrologic trip unit to measure phase-to-neutral (Ph-N) voltages.

External 24 V DC power-supply module

Use

An external 24 V DC power supply is required for installations with communication, whatever the type of trip unit.
On installations without communication, it is available as an option for Micrologic 5/6 in order to make it possible to:
- modify settings when the circuit breaker is open
- display measurements when the current flowing through the circuit breaker is low (15 to 50 A depending on the rating)
- maintain the display of the cause of tripping and interrupted current.

Characteristics

A single external 24 V DC supply may be used for the entire switchboard.
The required characteristics are:
- output voltage: 24 V DC ±5 %
- ripple: ±1 %.
- overvoltage category: OVC IV - as per IEC 60947-1.

External 24 V DC power-supply modules with an output current of 1 A are available:

Available external power-supply modules			Cat. no.
Power supply	V DC (±5 %)	24/30	**54440**
		48/60	**54441**
		100/125	**54442**
	V AC (+10 %, -15 %)	110/130	**54443**
		200/240	**54444**
		380/415	**54445**
Output voltage		24 V DC (±5 %)	
Ripple		±1 %	
Overvoltage category (OVC)		OVC IV - as per IEC 60947-1	

An external 24 V DC power-supply module with an output current of 3 A is also available:

Available external power-supply modules			Cat. no.
Power supply	V DC	110/230	**ABL8RPS24030**
	V AC	110/240	
Output voltage		24 V DC (±5 %)	
Ripple		±1 %	
Overvoltage category (OVC)		OVC II	

Total consumption

To determine the required output current of the 24 V DC power supply, it is necessary to sum up the currents consumed by the different loads supplied:

Consumption of Compact NSX modules Module	Consumption (mA)
Micrologic 5/6	20
BSCM module	10
FDM121	40
FDM128	≤ 285
Modbus communication interface (IFM)	60
Ethernet communication interface (IFE)	120
NSX cord U > 480 V AC	30

PB103790-20.eps



Test battery (cat. no. LV434206).

PB103833-18.eps



Battery module (cat. no. 54446).

PB103799-24.eps



24 V DC power-supply terminal block (cat. no. LV434210).

PB103789-24.eps



NSX cord U > 480 V (cat. no. LV434204).

PB103803-27.eps



Maintenance case (cat. no. TRV00910).

PB103794-32.eps



Configuration and maintenance module (cat. no. TRV00911).

DB115570R.eps

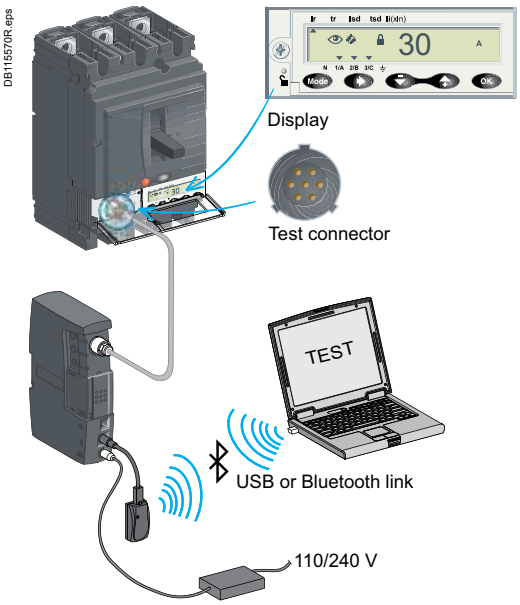

Using the configuration and maintenance module.

Test battery

This pocket battery connects to the Micrologic test connector. It powers up the Micrologic and the Ready LED. It supplies the screen and allows settings to be made via the keypad.

Battery module

The battery module is a back-up supply for the external power-supply module. The input/output voltages are 24 V DC and it can supply power for approximately three hours (100 mA).

24 V DC power-supply terminal block

The 24 V DC power-supply terminal block can be installed only on Micrologic 5/6 trip units. It is required to power the trip unit when the trip unit is not connected to an FDM121 display unit or to the communication system. When used, it excludes connection of an NSX cord.

NSX cord

- For voltage U ⩽ 480 V, available in 3 prefabricated lengths: 0.35 m, 1.3 m and 3 m.
- For voltages U > 480 V, a special 1.3 m cord with an insulation accessory is required.
- A set of cords with RJ45 connectors is available to adapt to different distances between devices.

Maintenance case

The case includes:

- configuration and maintenance module
- power supply (110...220 V AC / 50-60 Hz 24 V DC - 1 A)
- special cable for connection to the trip-unit test connector
- standard USB cable
- standard RJ45 cable
- user manual
- optional Bluetooth link (to PC).

Configuration and maintenance module

Included in the maintenance kit, this module tests Micrologic operation and provides access to all parameters and settings. It connects to the Micrologic test connector and can operate in two modes.

- Stand-alone mode to:
  - supply the Micrologic and check operation via the Ready LED
  - check mechanical operation of the circuit breaker (trip using pushbutton).
- PC mode, connected to a PC via USB or Bluetooth link. This mode provides access to protection settings, alarm settings and readings of all indicators. Using the associated RSU software utility, it is possible to store, in a dedicated file for each device, all the data that can transferred to another device.

This mode also offers operating-test functions:

- check on trip time delay (trip curve)
- check on non-tripping time (discrimination)
- check on ZSI (Zone Selective Interlocking) function
- alarm simulation
- display of setting curves
- display of currents
- printing of test reports.

Earth-leakage protection
Add-on protection against insulation faults using a Vigi module or Vigirex relay

There are two ways to add earth-leakage protection to any three or four-pole Compact NSX100 to 630 circuit breaker equipped with a magnetic, thermal-magnetic or Micrologic 2, 5 or 6 trip unit:
- by adding a Vigi module to the circuit breaker to form a Vigicompact NSX
- by using a Vigirex relay and separate toroids.

PB105113.eps



Vigicompact NSX100 to 630.

PB100435-16_SE.eps



Earth-leakage relay.

PB108161.eps



Separate toroids.

Circuit breaker with add-on Vigi module (Vigicompact NSX)

- For general characteristics of circuit breakers, see page A-6 and page A-7.
- Add-on Vigi modules. Earth-leakage protection is achieved by installing a Vigi module (characteristics and selection criteria on next page) directly on the circuit breaker terminals It directly actuates the trip unit (magnetic, thermal-magnetic or Micrologic).

Circuit breaker combined with a Vigirex relay

Compact NSX circuit breaker + Vigirex relay

Vigirex relays may be used to add external earth-leakage protection to Compact NSX circuit breakers. The circuit breakers must be equipped with an MN or MX voltage release. The Vigirex relays add special tripping thresholds and time delays for earth-leakage protection.
Vigirex relays are very useful when faced with major installation constraints (circuit breaker already installed and connected, limited space available, etc.).

Vigirex-relay characteristics
- Sensitivity adjustable from 30 mA to 250 mA and 9 time-delay settings (0 to 4.5 seconds).
- Closed toroids up to 630 A (30 to 300 mm in diameter), split toroids up to 250 A (46 to 110 mm in diameter) or rectangular sensors up to 630 A.
- 50/60 Hz, 400 Hz distribution systems.

Options
- Trip indication by a fail-safe contact.
- Pre-alarm contact and LED, etc.

Compliance with standards
- IEC 60947-2, annex M.
- IEC/EN 60755: general requirements for residual-current operated protective devices.
- IEC/EN 61000-4-2 to 4-6: immunity tests.
- CISPR11: radio-frequency radiated and conducted emission tests.
- UL1053 and CSA22.2 No. 144 for RH10, RH21 and RH99 relays at supply voltages up to and including 220/240 V.

PB105113.eps



Vigicompact NSX100 to 630 circuit breakers with earth-leakage protection

Addition of the Vigi module does not alter circuit-breaker characteristics:

- compliance with standards
- degree of protection, class II front-face insulation
- positive contact indication
- electrical characteristics
- trip-unit characteristics
- installation and connection modes
- indication, measurement and control auxiliaries
- installation and connection accessories.

Dimensions and weights		NSX100/160/250	NSX400/630
Dimensions	3 poles	105 x 236 x 86	135 x 355 x 110
W x H x D (mm)	4 poles	140 x 236 x 86	180 x 355 x 110
Weight (kg)	3 poles	2.5	8.8
	4 poles	3.2	10.8

PB103680-36.eps



Vigi earth-leakage protection modules

Compliance with standards

- IEC 60947-2, annex B.
- Decree dated 14 November 1988 (for France).
- IEC 60755, class A, immunity to DC components up to 6 mA.
- Operation down to -25 °C as per VDE 664.

Remote indications

Vigi modules may be equipped with an auxiliary contact (SDV) to remotely signal tripping due to an earth fault.

Use of 4-pole Vigi module with a 3-pole Compact NSX

In a 3-phase installation with an uninterrupted neutral, an accessory makes it possible to use a 4-pole Vigi module with connection of the neutral cable.

Power supply

Vigi modules are self-supplied internally by the distribution-system voltage and therefore do not require any external source. They continue to function even when supplied by only two phases.

DB112147.eps

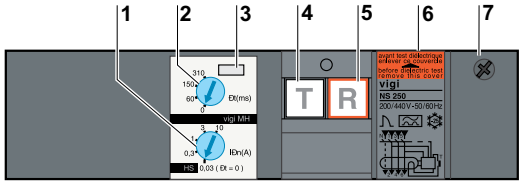

1 *Sensitivity setting*
2 *Time-delay setting (for selective earth-leakage protection).*
3 *Lead-seal fixture for controlled access to settings.*
4 *Test button simulating an earth-fault for regular checks on the tripping function*
5 *Reset button (reset required after earth-fault tripping).*
6 *Rating plate*
7 *Housing for SDV auxiliary contact.*

Plug-in devices

The Vigi module can be installed on a plug-in base. Special accessories are required (see catalogue number chapter).

Vigi module selection

Type	Vigi ME	Vigi MH	Vigi MB
Number of poles	3, 4 (1)	3, 4 (1)	3, 4 (1)
NSX100	■	■	-
NXS160	■	■	-
NSX250	-	■	-
NSX400	-	-	■
NSX630	-	-	■
Protection characteristics			
Sensitivity	fixed	adjustable	adjustable
IΔn (A)	0.3	0.03 - 0.3 - 1 - 3 - 10	0.3 - 1 - 3 - 10 - 30
Time delay	fixed	adjustable	adjustable
Intentional delay (ms)	< 40	0 - 60 (2) - 150 (2) - 310 (2)	0 - 60 - 150 - 310
Max. break time (ms)	< 40	< 40 < 140 < 300 < 800	< 40 < 140 < 300 < 800
Rated voltage V AC 50/60 Hz	200...440	200... 440 - 440...550	200...440 - 440...550

(1) Vigi 3P modules may also be used on 3P circuit breakers used for two-phase protection.
(2) If the sensitivity is set to 30 mA, there is no time delay, whatever the time-delay setting.

Operating safety

The Vigi module is a user safety device. It must be tested at regular intervals (every 6 months) via test button.

Motor protection
General information on motor feeders

The parameters to be considered for motor-feeder protection depend on:
- the application (type of machine driven, operating safety, frequency of operation, etc.)
- the level of continuity of service required by the load or the application
- the applicable standards for the protection of life and property.

The required electrical functions are:
- isolation
- switching, generally at high endurance levels
- protection against overloads and short-circuits, adapted to the motor
- additional special protection.

A motor feeder must comply with the requirements of standard IEC 60947-4-1 concerning contactors and their protection:
- coordination of feeder components
- thermal-relay trip classes
- contactor utilisation categories
- coordination of insulation.

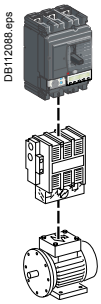

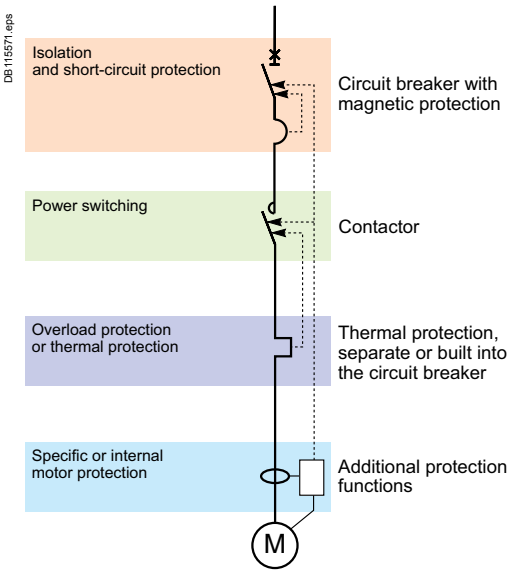

Switchgear functions in a motor feeder.

Motor-feeder function

A motor feeder comprises a set of devices for motor protection and control, as well as for protection of the feeder itself.

Isolation

The purpose is to isolate the live conductors from the upstream distribution system to enable work by maintenance personnel on the motor feeder at no risk. This function is provided by a motor circuit breaker offering positive contact indication and lockout/tagout possibilities.

Switching

The purpose is to control the motor (ON / OFF), either manually, automatically or remotely, taking into account overloads upon start-up and the long service life required. This function is provided by a contactor. When the coil of the contactor's electromagnet is energised, the contactor closes and establishes, through the poles, the circuit between the upstream supply and the motor, via the circuit breaker.

Basic protection

- Short-circuit protection

Detection and breaking, as quickly as possible, of high short-circuit currents to avoid damage to the installation. This function is provided by a magnetic or thermal-magnetic circuit breaker.

- Overload protection

Detection of overload currents and motor shutdown before temperature rise in the motor and conductors damages insulation. This function is provided by a thermal-magnetic circuit breaker or a separate thermal relay.

Overloads: I < 10 x In
They are caused by:
- *an electrical problem, related to an anomaly in the distribution system (e.g. phase failure, voltage outside tolerances, etc.)*
- *a mechanical problem, related to a process malfunction (e.g. excessive torque) or damage to the motor (e.g. bearing vibrations).*

These two causes will also result in excessively long starting times.
Impedant short-circuits: 10 x In < I < 50 x In
This type of short-circuit is generally due to deteriorated insulation of motor windings or damaged supply cables.
Short-circuits: I > 50 x In
This relatively rare type of fault may be caused by a connection error during maintenance.

- Phase unbalance or phase loss protection

Phase unbalance or phase loss can cause temperature rise and braking torques that can lead to premature ageing of the motor. These effects are even greater during starting, therefore protection must be virtually immediate.

Additional electronic protection

- Locked rotor.
- Under-load.
- Long starts and stalled rotor.
- Insulation faults.

Motor-feeder solutions

Standard IEC 60947 defines three types of device combinations for the protection of motor feeders.

Three devices
- Magnetic circuit breaker + contactor + thermal relay.

Two devices
- Thermal-magnetic circuit breaker + contactor.

One device
- Thermal-magnetic circuit breaker + contactor in an integrated solution (e.g. Tesys U).

Device coordination

The various components of a motor feeder must be coordinated. Standard IEC 60947-4-1 defines three types of coordination depending on the operating condition of the devices following a standardised short-circuit test.

Type-1 coordination

- No danger to life or property.
- The contactor and/or the thermal relay may be damaged.
- Repair and replacement of parts may be required prior to further service.

Type-2 coordination

- No danger to life or property.
- No damage or adjustments are allowed. The risk of contact welding is accepted as long as they can be easily separated.
- Isolation must be maintained after the incident, the motor feeder must be suitable for further use without repair or replacement of parts.
- A rapid inspection is sufficient before return to service.

Total coordination

- No damage and no risk of contact welding is allowed for the devices making up the motor feeder. The motor feeder must be suitable for further use without repair or replacement of parts.

This level is provided by integrated 1-device solutions such as Tesys U.

Contactor utilisation categories

For a given motor-feeder solution, the utilisation category determines the contactor withstand capacity in terms of frequency of operation and endurance. Selection, which depends on the operating conditions imposed by the application, may result in oversizing the contactor and circuit-breaker protection. Standard IEC 60947 defines the following contactor utilisation categories.

Contactor utilisation categories (AC current)

Contactor utilisation categories	Type of load	Control function	Typical applications
AC1	Non-inductive ($\cos \varphi \geq 0.8$)	Energising	Heating, distribution
AC2	Slip-ring motor ($\cos \varphi \geq 0.65$)	Starting Switching off motor during running Counter-current braking Inching	Wiring-drawing machine
AC3	Squirrel-cage motor ($\cos \varphi = 0.45$ for ≤ 100 A) ($\cos \varphi = 0.35$ for > 100 A)	Starting Switching off motor during running	Compressors, elevators, pumps, mixers, escalators, fans, conveyer systems, air-conditioning
AC4		Starting Switching off motor during running Regenerative braking Plugging Inching	Printing machines, wire-drawing machines

Utilisation category AC3 - common coordination tables for circuit breakers and contactors

This category covers asynchronous squirrel-cage motors that are switched off during running, which is the most common situation (85 % of cases). The contactor makes the starting current and switches off the rated current at a voltage approximately one sixth of the nominal value. The current is interrupted without difficulty.
The circuit breaker-contactor coordination tables for Compact NSX are for use with contactors in the AC3 utilisation category, in which case they ensure type-2 coordination.

Utilisation category AC4 - possible oversizing

This category covers asynchronous squirrel-cage motors capable of operating under regenerative braking or inching (jogging) conditions
The contactor makes the starting current and can interrupt this current at a voltage that may be equal to that of the distribution system.
These difficult conditions make it necessary to oversize the contactor and, in general, the protective circuit breaker with respect to category AC3.

Motor protection
Motor-feeder characteristics and solutions

The trip class determines the trip curve of the thermal protection device (inverse-time curve) for a motor feeder.
Standard IEC 60947-4-1 defines trip classes 5, 10, 20 and 30.
These classes are the maximum durations, in seconds, for motor starting with a starting current of 7.2 Ir, where Ir is the thermal setting indicated on the motor rating plate.

Example: In class 20, the motor must have finished starting within 20 seconds (6 to 20 s) for a starting current of 7.2 Ir.

Standardised values in kW

Rated operational power	Standardised values in kW currents Ie (A) for:			
	230 V	400 V	500 V	690 V
kW	A	A	A	A
0.06	0.35	0.32	0.16	0.12
0.09	0.52	0.3	0.24	0.17
0.12	0.7	0.44	0.32	0.23
0.18	1	0.6	0.48	0.35
0.25	1.5	0.85	0.68	0.49
0.37	1.9	1.1	0.88	0.64
0.55	2.6	1.5	1.2	0.87
0.75	3.3	1.9	1.5	1.1
1.1	4.7	2.7	2.2	1.6
1.5	6.3	3.6	2.9	2.1
2.2	8.5	4.9	3.9	2.8
3	11.3	6.5	5.2	3.8
4	15	8.5	6.8	4.9
5.5	20	11.5	9.2	6.7
7.5	27	15.5	12.4	8.9
11	38	22	17.6	12.8
15	51	29	23	17
18.5	61	35	28	21
22	72	41	33	24
30	96	55	44	32
37	115	66	53	39
45	140	80	64	47
55	169	97	78	57
75	230	132	106	77
90	278	160	128	93
110	340	195	156	113
132	400	230	184	134
160	487	280	224	162
200	609	350	280	203
250	748	430	344	250
315	940	540	432	313

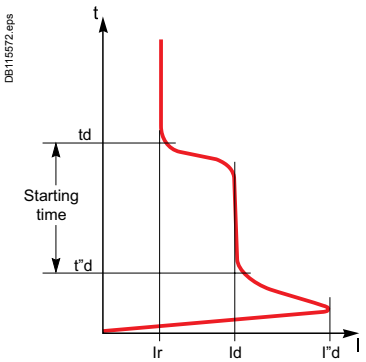

Typical motor-starting curve

Trip class of a thermal-protection device

The motor feeder includes thermal protection that may be built into the circuit breaker. The protection must have a trip class suited to motor starting. Depending on the application, the motor starting time varies from a few seconds (no-load start) to a few dozen seconds (high-inertia load).
Standard IEC 60947-4-1 defines the trip classes below as a function of current setting Ir for thermal protection.

Trip class of thermal relays as a function of their Ir setting

Class	1.05 I r (1)	1.2 Ir (1)	1.5 Ir (2)	7.2 I r(1)
5	t > 2 h	t < 2h	t < 2 mn	2 s < t ≤ 5 s
10	t > 2 h	t < 2h	t < 4 mn	4 s < t ≤ 10 s
20	t > 2 h	t < 2h	t < 8 mn	6 s < t ≤ 20 s
30	t > 2 h	t < 2h	t < 12 mn	9 s < t ≤ 30 s

(1) Time for a cold motor (motor off and cold).
(2) Time for warm motor (motor running under normal conditions).

Currents of squirrel-cage motors at full rated load

Standardised values in HP

Rated operational power	Indicative values of the rated operational currents Ie (A) for						
	110 - 120 V	200 V	208 V	220 - 240 V	380 - 415 V	440 - 480 V	550 - 600 V
hp							
1/2	4.4	2.5	2.4	2.2	1.3	1.1	0.9
3/4	6.4	3.7	3.5	3.2	1.8	1.6	1.3
1	8.4	4.8	4.6	4.2	2.3	2.1	1.7
1 1/2	12	6.9	6.6	6	3.3	3	2.4
2	13.6	7.8	7.5	6.8	4.3	3.4	2.7
3	19.2	11	10.6	9.6	6.1	4.8	3.9
5	30.4	17.5	16.7	15.2	9.7	7.6	6.1
7 1/2	44	25.3	24.2	22	14	11	9
10	56	32.2	30.8	28	18	14	11
15	84	48.3	46.2	42	27	21	17
20	108	62.1	59.4	54	34	27	22
25	136	78.2	74.8	68	44	34	27
30	160	92	88	80	51	40	32
40	208	120	114	104	66	52	41
50	260	150	143	130	83	65	52
60	-	177	169	154	103	77	62
75	-	221	211	192	128	96	77
100	-	285	273	248	165	124	99
125	-	359	343	312	208	156	125
150	-	414	396	360	240	180	144
200	-	552	528	480	320	240	192
250	-	-	-	604	403	302	242
300	-	-	-	722	482	361	289

***Note**: 1 hp = 0.7457 kW.*

Asynchronous-motor starting parameters

The main parameters of direct on-line starting of three-phase asynchronous motors (90 % of all applications) are listed below.

■ **Ir**: rated current
This is the current drawn by the motor at full rated load (e.g. approximately 100 A rms for 55 kW at 400 V).

■ **Id**: starting current
This is the current drawn by the motor during starting, on average 7.2 In for a duration td of 5 to 30 seconds depending on the application (e.g. 720 A rms for 10 seconds). These values determine the trip class and any additional "long-start" protection devices that may be needed.

■ **I"d**: peak starting current
This is the subtransient current during the first two half-waves when the system is energised, on the average 14 In for 10 to 15 ms (e.g. 1840 A peak).

The protection settings must effectively protect the motor, notably via a suitable thermal-relay trip class, but let the peak starting current through.

Compact NSX motor circuit breakers are designed for motor-feeder solutions using:
■ three devices, including an MA or 1.3 M magnetic-only trip unit
■ two devices including a TM-D or 2 M thermal-magnetic trip unit.
They are designed for use with contactors in the AC3 utilisation category (80 % of all cases) and they ensure type-2 coordination with the contactor.
For the AC4 utilisation category, the difficult conditions generally make it necessary to oversize the protection circuit breaker with respect to the AC3 category.

Compact NSX motor-protection range

Compact NSX trip units can be used to create motor-feeder solutions comprising two or three devices. The protection devices are designed for continuous duty at 65 °C.

Three-device solutions
■ 1 NSX circuit breaker with an MA or Micrologic 1.3 M trip unit.
■ 1 contactor.
■ 1 thermal relay.

Two-device solutions
■ 1 Compact NSX circuit breaker
□ with a Micrologic 2.2 M or 2.3 M electronic trip unit
□ with a Micrologic 6 E-M electronic trip unit. This version offers additional protection and Power Meter functions.
■ 1 contactor.

Type of motor protection			**3 devices**		**2 devices**	
Compact NSX circuit breaker			**NSX100/160/250**	**NSX400/630**	**NSX100 to 630**	
	Type-2 coordination with		Contactor + thermal relay		Contactor	
Trip unit	Type		**MA**	**Micrologic 1.3 M**	**Micrologic 2 M**	**Micrologic 6 E-M**
	Technology		Magnetic	Electronic	Electronic	Electronic
					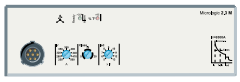	
Thermal relay	Separate		■	■		
	Built-in, class	5			■	■
		10			■	■
		20			■	■
		30				■
Protection functions of Compact NSX circuit breaker						
Short-circuits			■	■	■	■
Overloads					■	■
Insulation faults	Ground-fault					■
Special motor functions	Phase unbalance				■	■
	Locked rotor					■
	Under-load					■
	Long start					■
Built-in Power Meter functions						
	I, U, energy					■
Operating assistance						
	Counters (cycles, trips, alarms, hours)					■
	Contact-wear indicator					■
	Load profile and thermal image					■

Motor protection
MA and Micrologic 1.3 M instantaneous trip units

MA magnetic trip units are used in **3-device motor-feeder solutions.** They can be mounted on all Compact NSX100/160/250 circuit breakers with performance levels B/F/H/N/S/L.
They provide short-circuit protection for motors up to 110 kW at 400 V.

MA magnetic trip units

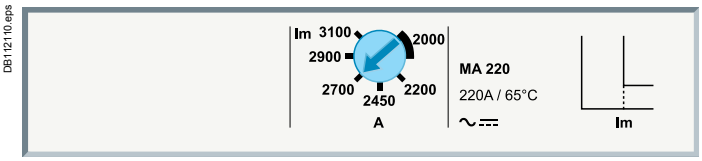

Circuit breakers with an MA trip unit are combined with a thermal relay and a contactor or a starter.

Protection

Magnetic protection (Im)
Short-circuit protection with an adjustable pick-up Im that initiates instantaneous tripping if exceeded.
- **Im** = In x ... is set on an adjustment dial in multiples of the rating:
  - 6 to 14 x In (2.5 to 100 A ratings)
  - 9 to 14 x In (150 to 200 A ratings)

Protection version
- 3-pole (3P 3D): 3-pole frame (3P) equipped with detection on all 3 poles (3D).

Micrologic 1.3 M trip units are used in **3-device motor-feeder solutions** on Compact NSX400/630 circuit breakers with performance levels B/F/H/N/S/L.
They provide short-circuit protection for motors up to 250 kW at 400 V.
They also provide the benefits of electronic technology:
- accurate settings
- tests
- "Ready" LED.

Micrologic 1.3 M trip units

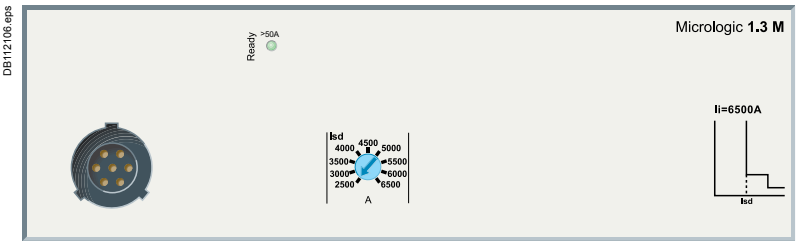

Circuit breakers with a Micrologic 1.3 M trip unit are combined with a thermal relay and a contactor.

Protection
Settings are made using a dial.

Short-circuits: Short-time protection (Isd)
Protection with an adjustable pick-up Isd. There is a very short delay to let through motor starting currents.
- Isd is set in amperes from 5 to 13 x In, as follows:
  - from 1600 to 4160 A for the 320 A rating
  - from 2500 to 6500 A for the 500 A rating.

Short-circuits: Non-adjustable instantaneous protection (Ii)
Instantaneous protection with non-adjustable pick-up Ii.

Protection version
- 3-pole (3P 3D): 3-pole frame (3P) equipped with detection on all 3 poles (3D).

Indications

Front indications
- Green “Ready” LED: flashes slowly when the circuit breaker is ready to trip in the event of a fault.

Note: all the trip units have a transparent lead-sealable cover that protects access to the adjustment dials.

Magnetic trip units		MA 2.5 to 220							
Ratings (A)	**In at 65 °C** (1)	**2.5**	**6.3**	**12.5**	**25**	**50**	**100** (1)	**150**	**220**
Circuit breaker	Compact NSX100	■	■	■	■	■	■	-	-
	Compact NSX160	-	-	-	■	■	■	■	-
	Compact NSX250	-	-	-	-	-	■	■	■
Instantaneous magnetic protection									
Pick-up (A) accuracy ±20 %	**Im** = In x ...	Adjustable from 6 to 14 x In (settings 6, 7, 8, 9, 10, 11, 12, 13, 14)						Adjustable from 9 to 14 x In (settings 9, 10, 11, 12, 13, 14)	
Time delay (ms)	tm	fixed							

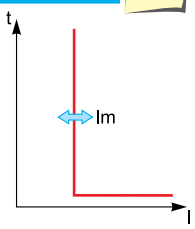

(1) MA100 3P adjustable from 6 to 14 x In.
MA100 4P adjustable from 9 to 14 x In.

Micrologic 1.3 M			
Ratings (A)	**In at 65 °C** (1)	**320**	**500**
Circuit breaker	Compact NSX400	■	-
	Compact NSX630	■	■
S Short-time protection			
Pick-up (A) accuracy ±15 %	**Isd**	Adjustable directly in amps	
		9 settings: 1600, 1920, 2440, 2560, 2880, 3200, 3520, 3840, 4160 A	9 settings: 2500, 3000, 3500, 4000, 4500, 5000, 5500, 6000, 6500 A
Time delay (ms)	**tsd**	Non-adjustable	
	Non-tripping time Maximum break time	10 60	
I Instantaneous protection			
Pick-up (A) accuracy ±15 %	**Ii** non-adjustable	4800	6500
	Non-tripping time Maximum break time	0 30 ms	

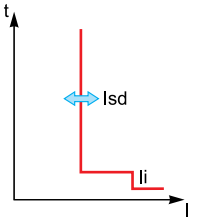

(1) Motor standards require operation at 65 °C. Circuit-breaker ratings are derated to take this requirement into account.

Motor protection
Micrologic 2.2 / 2.3 M electronic trip units

Micrologic 2.2 / 2.3 M trip units provide built-in thermal and magnetic protection. They are used in **2-device motor-feeder solutions** on Compact NSX100 to 630 circuit breakers with performance levels B/F/H/N/S/L. They provide protection for motors up to 315 kW at 400 V against:
- short-circuits
- overloads with selection of a trip class (5, 10 or 20)
- phase unbalance.

DB112111.eps

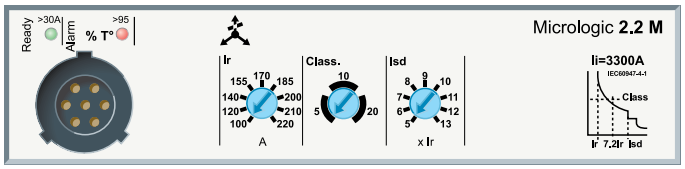

Circuit breakers with a Micrologic 2.2 / 2.3 M trip unit include protection similar to an inverse-time thermal relay. They are combined with a contactor.

Protection

Settings are made using a dial.

Overloads (or thermal protection): Long-time protection and trip class (Ir)
Inverse-time thermal protection against overloads with adjustable pick-up Ir. Settings are made in amperes. The tripping curve for the long-time protection, which indicates the time delay **tr** before tripping, is defined by the selected trip class.

Trip class (class)
The class is selected as a function of the normal motor starting time.
- Class 5: starting time less than 5 s.
- Class 10: starting time less than 10 s.
- Class 20: starting time less than 20 s.

For a given class, it is necessary to check that all motor-feeder components are sized to carry the 7.2 Ir starting current without excessive temperature rise during the time corresponding to the class.

Short-circuits: Short-time protection (Isd)
Protection with an adjustable pick-up **Isd**. There is a very short delay to let through motor starting currents.

Short-circuits: Non-adjustable instantaneous protection (Ii)
Instantaneous protection with non-adjustable pick-up **Ii**.

Phase unbalance or phase loss (Iunbal) ( )
This function opens the circuit breaker if a phase unbalance occurs:
- that is greater than the 30 % fixed pick-up **Iunbal**
- following the non-adjustable time delay **tunbal** equal to:
  - 0.7 s during starting
  - 4 s during normal operation.

Phase loss is an extreme case of phase unbalance and leads to tripping under the same conditions.

Indications

Front indications
- Green “Ready” LED: flashes slowly when the circuit breaker is ready to trip in the event of a fault.
- Red alarm LED for motor operation: goes ON when the thermal image of the rotor and stator is greater than 95 % of the permissible temperature rise.

Remote indications via SDTAM module
Compact NSX devices with a Micrologic 2 can be equipped with an SDTAM module dedicated to motor applications for:
- a contact to indicate circuit-breaker overload
- a contact to open the contactor. In the event of a phase unbalance or overload, this output is activated 400 ms before circuit-breaker tripping to open the contactor and avoid circuit breaker tripping.

This module takes the place of the MN/MX coils and an OF contact.

PB103376.eps



SDTAM remote indication relay module with its terminal block.

***Note:** all the trip units have a transparent lead-sealable cover that protects access to the adjustment dials.*

Micrologic 2.2 / 2.3 M

Ratings (A)	In at 65 °C (1)		25	50	100	150	220	320	500		
Circuit breaker	Compact NSX100		■	■	■	-	-	-	-		
	Compact NSX160		■	■	■	■	-	-	-		
	Compact NSX250		■	■	■	■	■	-	-		
	Compact NSX400		-	-	-	-	-	■	-		
	Compact NSX630		-	-	-	-	-	■	■		
L Overloads (or thermal protection): Long-time protection and trip class											
Pick-up (A) tripping between 1.05 and 1.20 Ir	**Ir**		value depending on trip unit rating (In) and setting on dial								
	In = 25 A	Ir =	12	14	16	18	20	22	23	24	25
	In = 50 A	Ir =	25	30	32	36	40	42	45	47	50
	In = 100 A	Ir =	50	60	70	75	80	85	90	95	100
	In = 150 A	Ir =	70	80	90	100	110	120	130	140	150
	In = 220 A	Ir =	100	120	140	155	170	185	200	210	220
	In = 320 A	Ir =	160	180	200	220	240	260	280	300	320
	In = 500 A	Ir =	250	280	320	350	380	400	440	470	500
Trip class as per IEC 60947-4-1			5	10	20						
Time delay (s)	**tr**	1.5 x Ir	120	240	480	for warm motor					
depending on selected trip class		6 x Ir	6.5	13.5	26	for cold motor					
		7.2 x Ir	5	10	20	for cold motor					
Thermal memory			20 minutes before and after tripping								
Cooling fan			non-adjustable - motor self-cooled								
S_0 Short-circuits: Short-time protection with fixed time delay											
Pick-up (A) accuracy ±15 %	**Isd** = Ir x ...		5	6	7	8	9	10	11	12	13
Time delay (ms)	**tsd**		non-adjustable								
	Non-tripping time		10								
	Maximum break time		60								
I Short-circuits: Non-adjustable instantaneous protection											
Pick-up (A) accuracy ±15 %	Ii non-adjustable		425	750	1500	2250	3300	4800	6500		
Time delay (ms)	Non-tripping time		0								
	Maximum break time		30								
Phase unbalance or phase loss											
Pick-up (A) accuracy ±20 %	Iunbal in % average current (2)		> 30 %								
Time delay (s)	non-adjustable		0.7 s during starting 4 s during normal operation								

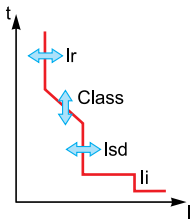

(1) Motor standards require operation at 65 °C. Circuit-breaker ratings are derated to take this requirement into account (see page B-8).
(2) The unbalance measurement takes into account the most unbalanced phase with respect to the average current.

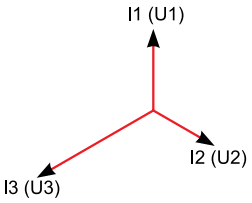

Unbalance of phase currents and voltages.

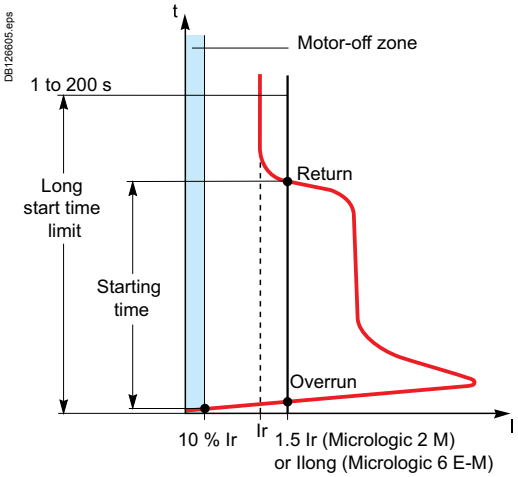

Motor starting and long starts.

Additional technical characteristics

Phase unbalance

An unbalance in three-phase systems occurs when the three voltages are not equal in amplitude and/or not displaced 120° with respect to each other. It is generally due to single-phase loads that are incorrectly distributed throughout the system and unbalance the voltages between the phases.

These unbalances create negative current components that cause braking torques and temperature rise in asynchronous machines, thus leading to premature ageing.

Phase loss

Phase loss is a special case of phase unbalance.

- *During normal operation, it produces the effects mentioned above and tripping must occur after four seconds.*
- *During starting, the absence of a phase may cause motor reversing, i.e. it is the load that determines the direction of rotation. This requires virtually immediate tripping (0.7 seconds).*

Starting time in compliance with the class (Micrologic 2 M)

For normal motor starting, Micrologic 2 M checks the conditions below with respect to the thermal-protection (long-time) pick-up Ir:

- *current > 10 % x Ir (motor-off limit)*
- *overrun of 1.5 x Ir threshold, then return below this threshold before the end of a 10 s time delay.*

If either of these conditions is not met, the thermal protection trips the device after a maximum time equal to that of the selected class.

Pick-up Ir must have been set to the current indicated on the motor rating plate.

Long starts (Micrologic 6 E-M)

When this function is not activated, the starting conditions are those indicated above.

When it is activated, this protection supplements thermal protection (class).

A long start causes tripping and is characterised by:

- *current > 10 % x Ir (motor-off limit) with:*
- *either overrun of the long-time pick-up (1 to 8 x Ir) without return below the pick-up before the end of the long-time time delay (1 to 200 s)*
- *or no overrun of the long-time pick-up (1 to 8 x Ir) before the end of the long-time time delay (1 to 200 s).*

Pick-up Ir must have been set to the current indicated on the motor rating plate.

This protection should be coordinated with the selected class.

Motor protection
Micrologic 6 E-M electronic trip units

Micrologic 6.E-M is used in **2-device motor-feeder solutions.**
It provides the same protection as Micrologic 2 M:
■ short-circuits
■ overloads with selection of the same trip classes (5, 10 or 20), plus trip class 30 for starting of machines with high inertia.
In addition, it offers specific motor-protection functions that can be set via the keypad.

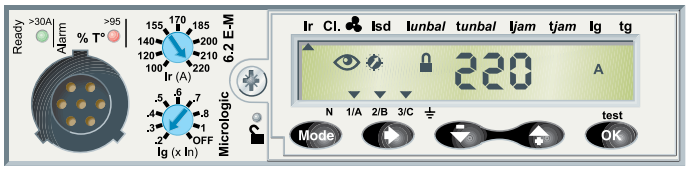

Protection

The protection functions are identical to those of Micrologic 2 M and can be fine-adjusted via the keypad.
Access to setting modifications via the keypad is protected by a locking function that is controlled by a microswitch. The lock is activated automatically if the keypad is not used for 5 minutes. Access to the microswitch is protected by a transparent lead-sealable cover. It is possible to scroll through settings and measurements with the cover closed.

Overloads (or thermal), class and short-circuits
The long-time, short-time and instantaneous functions are identical to those of Micrologic 2 M.
In addition, there is trip class 30 for long-time protection and a setting for self-cooled or fan-cooled motors ( ).

Ground-fault protection (Ig)
Residual type ground-fault protection with an adjustable pick-up **Ig** (with Off position) and adjustable time delay **tg**.

Phase unbalance or phase loss (Iunbal)
This function opens the circuit breaker if a phase unbalance occurs:
■ that is greater than the **Iunbal** pick-up that can be fine-adjusted from 10 to 40 % (30 % by default)
■ following the **tunbal** time delay that is:
□ 0.7 s during starting
□ adjustable from 1 to 10 seconds (4 seconds by default) during normal operation.
Phase loss is an extreme case of phase unbalance and leads to tripping under the same conditions.

Locked rotor (Ijam)
This function detects locking of the motor shaft caused by the load.
During motor starting (see page A-55), the function is disabled.
During normal operation, it causes tripping:
■ above the **Ijam** pick-up that can be fine-adjusted from 1 to 8 x Ir
■ in conjunction with the **tjam** time delay that can be adjusted from 1 to 30 seconds.

Under-load (Iund)
This function detects motor no-load operation due to insufficient load (e.g. a drained pump). It detects phase undercurrent.
During motor starting (see page A-55), the function is always enabled.
During normal operation, it causes tripping:
■ below the **Iund** pick-up that can be fine-adjusted from 0.3 to 0.9 x Ir
■ in conjunction with the **tund** time delay that can be adjusted from 1 to 200 seconds.

Long starts (Ilong)
This protection supplements thermal protection (class).
It is used to better adjust protection to the starting parameters.
It detects abnormal motor starting, i.e. when the starting current remains too high or too low with respect to a pick-up value and a time delay.
It causes tripping:
■ in relation with a **Ilong** pick-up that can be fine-adjusted from 1 to 8 x Ir
■ in conjunction with the **tlong** time delay that can be adjusted from 1 to 200 seconds.
(see "long starts" page A-55)

Display of type of fault

On a fault trip, the type of fault (Ir, Isd, Ii, Ig, Iunbal, Ijam), the phase concerned and the interrupted current are displayed.

Indications

Front indications
■ Green “Ready” LED: flashes slowly when the circuit breaker is ready to trip in the event of a fault.
■ Red alarm LED for motor operation: goes ON when the thermal image of the rotor or stator is greater than 95% of the permissible temperature rise.

Remote indications via SDTAM or SDx module
See description on page A-54 for SDTAM and page A-93 for SDx.

PB103376.eps



SDTAM remote indication relay module with its terminal block.

Note: all the trip units have a transparent lead-sealable cover that protects access to the adjustment dials.

Micrologic 6.2 / 6.3 E-M

Ratings (A)	In at 65 °C (1)			25	50	80	150	220	320	500		
Circuit breaker	Compact NSX100			■	■	■	-	-	-	-		
	Compact NSX160			■	■	■	■	-	-	-		
	Compact NSX250			■	■	■	■	■	-	-		
	Compact NSX400			-	-	-	-	-	■	-		
	Compact NSX630			-	-	-	-	-	■	■		
L Overloads: Long-time protection												
Pick-up (A)	**Ir**	Dial setting		Value depending on trip-unit rating (In) and setting on dial								
Tripping between 1.05 and 1.20 Ir		In = 25 A	Ir =	12	14	16	18	20	22	23	24	25
		In = 50 A	Ir =	25	30	32	36	40	42	45	47	50
		In = 80 A	Ir =	35	42	47	52	57	60	65	72	80
		In = 150 A	Ir =	70	80	90	100	110	120	130	140	150
		In = 220 A	Ir =	100	120	140	155	170	185	200	210	220
		In = 320 A	Ir =	160	180	200	220	240	260	280	300	320
		In = 500 A	Ir =	250	280	320	350	380	400	440	470	500
		Keypad setting		Fine adjustments in 1 A steps below maximum value defined by dial setting								
Trip class as per IEC 60947-4-1				5	10	20	30					
Time delay (s)	**tr**		1.5 x Ir	120	240	480	720	for warm motor				
depending on selected trip class			6 x Ir	6.5	13.5	26	38	for cold motor				
			7.2 x Ir	5	10	20	30	for cold motor				
Thermal memory				20 minutes before and after tripping								
Cooling fan				Settings for self-cooled or fan-cooled motors								
S_0 Short-circuits: Short-time protection with fixed time delay												
Pick-up (A) accuracy ±15 %	**Isd** = Ir x ...			5	6	7	8	9	10	11	12	13
				Fine adjustment In 0.5 x Ir steps using the keypad								
Time delay	**tsd**			non-adjustable								
	Non-tripping time			10 ms								
	Maximum break time			60 ms								
I Short-circuits: Non-adjustable instantaneous protection												
Pick-up (A) accuracy ±15 %	**Ii** non-adjustable			425	750	1200	2250	3300	4800	6500		
	Non-tripping time			0 ms								
	Maximum break time			30 ms								
G Ground faults												
Pick-up (A) accuracy ±10 %	**Ig** = In x ...			Dial setting								
		In = 25 A	Ig =	0.6	0.6	0.6	0.6	0.7	0.8	0.9	1	Off
		In = 50 A	Ig =	0.3	0.4	0.5	0.6	0.7	0.8	0.9	1	Off
		In > 50 A	Ig =	0.2	0.3	0.4	0.5	0.6	0.7	0.8	1	Off
				fine adjustments in 0.05 x In steps								
Time delay (ms)	**tg**			0	0.1	0.2	0.3	0.4				
	Non-tripping time			20	80	140	230	350				
	Maximum break time			80	140	200	320	500				
Phase unbalance or phase loss												
Pick-up (A) accuracy ±20 %	**Iunbal** = in % average current (2)			adjustable from 10 to 40 %, default setting = 30 % fine adjustments in 1 % steps using the keypad activated during motor starting								
Time delay (s)	**tunbal**			0.7 s during starting 1 to 10 seconds during normal operation, default setting = 4 seconds fine adjustments in 1 s steps using the keypad								
Locked rotor												
Pick-up (A) accuracy ±10 %	**Ijam** = Ir x ...			1 x 8 Ir with Off position, default setting = Off fine adjustments in 0.1 x Ir steps using the keypad disabled during motor starting								
Time delay (s)	**tjam** =			1 to 30 seconds fine adjustments in 1 s steps using the keypad, default setting = 5 s								
Under-load (under-current)												
Pick-up (A) accuracy ±10 %	**Iund** = Ir x ...			0.3 x 0.9 Ir with Off position, default setting = Off Fine adjustments in Ir x 0.01 steps using the RSU software activated during motor starting								
Time delay (s)	**tund** =			1 to 200 seconds fine adjustments in 1 s steps using the RSU software, default setting = 10 s								
Long starts												
Pick-up (A) accuracy ±10 %	**Ilong** = Ir x ...			1 x 8 Ir with Off position, default setting = Off Fine adjustments in Ir x 0.1 steps using the RSU software activated during motor starting								
Time delay (s)	**tlong** =			1 to 200 seconds fine adjustments in 1 s steps using the RSU software, default setting = 10 s								

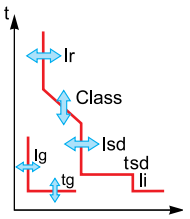

(1) Motor standards require operation at 65 °C. Circuit-breaker ratings are derated to take this requirement into account (see page B-8).
(2) The unbalance measurement takes into account the most unbalanced phase with respect to the average current.

Motor protection
Micrologic 6 E-M electronic trip units

Micrologic 6 E-M provides Power Meter functions with energy metering. With the FDM121 display unit, all metering data and operating indicators are available on the switchboard front panel. This version also displays the thermal image of the motor.

PB103365.eps



Micrologic 6 E-M.

DB111404.eps



Current values.

DB111405.eps



Thermal-image alarm.

DB118726R.eps

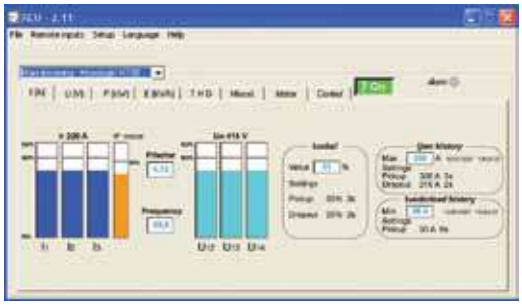

PC screen with motor thermal image and value monitoring.

Power Meter functions

The built-in Power Meter functions of the Micrologic 6 E-M are the same as those for the Micrologic 6 E presented in the section on distribution (see page A-22). When used exclusively in the three-phase version, neutral measurements are excluded.

Operating-assistance functions

The operating-assistance functions of the Micrologic 6 E-M are the same as those for the Micrologic 6 E presented in the section on distribution (see page A-24).

Special functions for motor feeders

Additional operating functions specifically for motor feeders are available.

Phase sequence

The order in which the phases L1, L2, L3 are connected determines the direction of motor rotation. If two phases are inverted, the direction is reversed.
Information on the direction of rotation is provided. It can be linked to an alarm to detect an inversion in the direction following servicing on the supply under de-energised conditions and disable restarting.

Thermal image of the rotor and stator

Micrologic 6 E-M offers a thermal-image function.
Taking into account the Ir setting and the class, an algorithm simulates rotor and stator temperature rise. It includes the slow temperature rise of the stator and its metal mass. Also included is the faster temperature rise of the copper rotor.
The thermal protection function trips the circuit breaker when the calculated thermal image reaches 100 % of the permissible temperature rise.
The communication indicates the thermal-image value as a percentage of the permissible temperature rise. One or more alarms may be assigned to selected thresholds. A red LED on the front signals when the value exceeds 95 %.
An SDx module with two outputs programmed for thermal-image values can be used to implement other alarm functions.

The additional technical characteristics are identical to those of Micrologic 6 E (see page A-23 and page A-25).


PB105112.eps


PB108167.eps


PB111801-21_r.eps

Micrologic 6 E-M integrated Power Meter and operating-assistance functions			Display	
			Micrologic LCD	FDM display
Measurements				
Instantaneous rms measurements				
Currents (A)	Phase currents and average value	I1, I2, I3 and Iavg = (I1 + I2 + I3) / 3	■	■
	Highest current of the 3 phases	Imax of I1, I2, I3	■	■
	Ground-fault protection	% Ig (pick-up setting)	■	■
	Current unbalance between phases	% Iavg	-	■
Voltages (V)	Phase-to-phase voltages and average value	U12, U23, U31 and Uavg = (U12 + U21 + U23) / 3	■	■
	Unbalance between phase-to-phase voltages	% Uavg	-	■
	Phase sequence	1-2-3, 1-3-2	■	-
Frequency (Hz)	Power system	F	■	■
Power	Active (kW), reactive (kVAR), apparent (kVA)	P, Q, S total and per phase	-	■
	Power factor and cos φ (fundamental)	PF, cos φ, total and per phase	-	■
Maximeters / minimeters	Associated with instantaneous rms measurements	Reset via Micrologic and the display unit	-	■
Energy metering				
Energy	Active (kWh), reactive (kVARh), apparent (kVAh)	Total since last reset	■	■
		Absolute or signed mode (1)	-	■
Demand and maximum demand values				
Demand current (A)	Phases	Present value on the selected window	-	(2)
		Maximum demand since last reset	-	(2)
Demand power	Active (kWh), reactive (kVARh), apparent (kVAh)	Present value on the selected window	-	(2)
		Maximum demand since last reset	-	(2)
Calculation window	Sliding, fixed or com-synchronised	Adjustable from 5 to 60 minutes in 1 minute steps	-	(2)
		Absolute or signed mode(1)	-	(2)
Power quality				
Total harmonic distortion (%)	Of voltage with respect to rms value	THDU,THDV of the Ph-Ph and Ph-N voltage	-	■
	Of current with respect to rms value	THDI of the phase current	-	■
Operating assistance				
Personalised alarms				
Settings	Up to 10 alarms can be assigned to all measurements and events		-	(2)
	as well as to phase lead/lag, four quadrants, phase sequence and thermal image		-	(2)
Time-stamped histories				
Trips	last 17	Ir, Isd, Ii, Ig, Iunbal, Ijam, Iund, Ilong	-	(2)
Alarms	last 10		-	(2)
Operating events	last 10 events and type:	Modification of protection setting by dial	-	(2)
		Opening of keypad lock	-	(2)
		Test via keypad	-	(2)
		Test via external tool	-	(2)
		Time setting (date and time)	-	(2)
		Reset for maximeter/minimeter and energy meter	■	(2)
Time stamping	Presentation	Date and time, text, status	-	(2)
Time-stamped event tables				
Protection settings	One of the following settings modified	Ir tr Isd tsd Ii Ig tg	-	(2)
	Time-stamping of modification	Date and time of modification	-	(2)
	Previous value	Value before modification	-	(2)
Min/Max	Value monitored	I1 I2 I3 U12 U23 U31 f	-	(2)
	Time-stamping of min/max value	Date and time of record	-	(2)
	Present min/max value	Min/max recorded for the value	-	(2)
Maintenance indicators				
Counter	Mechanical cycles (3)	Assignable to an alarm	-	(2)
	Electrical cycles (3)	Assignable to an alarm	-	(2)
	Trips	One per type of trip	-	(2)
	Alarms	One for each type of alarm	-	(2)
	Hours	Total operating time (hours)	-	(2)
Indicator	Contact wear	%	-	■
Load profile	Hours at different load levels	% of hours in four current ranges: 0-49 % In, 50-79 % In, 80-89 % In, ⩾ 90 % In	-	(2)
Thermal image	Stator and rotor	% of permissible temperature rise	-	(2)

(1) Absolute mode: E absolute = E out + E in; Signed mode: E signed = E out - E in.
(2) Available via the communication system only.
(3) The BSCM module (page A-33) is required for these functions.

Special applications
Protection of public distribution systems with Micrologic 2-AB

Micrologic AB trip units are used in public distribution systems to limit the current supplied according to the consumer's contract. They are available in 100, 160, 240 and 400 A ratings and are supplied with a lead-seal device to protect the settings.

DB112117.eps

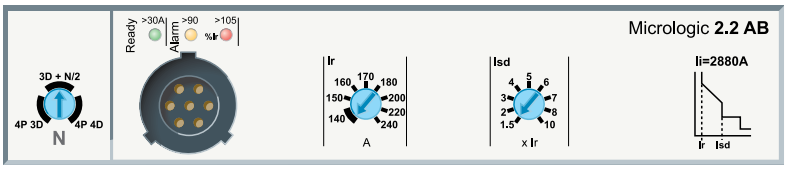

Compact NSX circuit breakers equipped with Micrologic AB trip units are installed as incoming devices for consumer installations connected to the public LV distribution system.
With respect to the utility, they have two functions.
■ Consumption is limited to the contractual power level. If the limit is exceeded, a fast thermal-protection function trips the device at the head of the consumer's installation without the utility having to intervene.
■ Total discrimination is ensured with the upstream fuses on the public distribution system in the event of a fault, overload or short-circuit in the consumer's installation, protecting the utility line.
In addition, they provide the consumer with:
■ protection for the installation as a whole, with the possibility of adding a Vigi earth-leakage protection module
■ the possibility of downstream discrimination.
This type of Compact NSX is often used in conjunction with an Compact INV switch-disconnector located outside the consumer's building and providing the visible-break function.
This means the operator can directly see, through a transparent cover, the physical separation of the main contacts. The Compact INV range is also suitable for isolation with positive contact indication.
This means utility operators can work on the service-connection unit after isolating it from the upstream line.

PB111442_38.eps



Compact INV switch-disconnector with visible break.

PB108164.eps



Compact NSX with Micrologic 2 AB.

Protection

Settings are made using the adjustment dials with fine-adjustment possibilities and a lead-seal fixture.

Overloads: Long-time protection (Ir)
Inverse-time thermal protection against overloads with an adjustable current pick-up **Ir** and a very short, non-adjustable time delay **tr** (15 seconds for **1.5 x Ir**).

Short-circuits: Short-time protection (Isd) with fixed time delay
Short-circuit protection with an adjustable pick-up Isd. The short-time pick-up values are high enough to avoid nuisance tripping in the event of transient current spikes.

Short-circuits: Non-adjustable instantaneous protection
Instantaneous short-circuit protection with a fixed pick-up.

Neutral protection
Available on four-pole circuit breakers only. Neutral protection may be set using a three-position switch:
■ 4P 3D: neutral unprotected
■ 4P 3D + N/2: neutral protection at half the value of the phase pick-up, i.e. 0.5 x Ir
■ 4P 4D: neutral fully protected at Ir.

Indications

Front indications

DB112019.eps

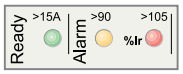

■ Green “Ready” LED: flashes slowly when the circuit breaker is ready to trip in the event of a fault.
■ Orange overload pre-alarm LED: steady on when I > 90 % Ir.
■ Red overload LED: steady on when I > 105 % Ir.

Remote indications
An SDx relay module installed inside the circuit breaker can be used to remote the overload-trip signal. This module receives the signal from the Micrologic electronic trip unit via an optical link and makes it available on the terminal block. The signal is cleared when the circuit breaker is closed.
The module is described in detail in the section dealing with accessories page A-95.

PB103377.eps



SDx remote indication relay module with its terminal block.

Micrologic 2.2 / 2.3 AB

Ratings (A)	In at 40 °C (1)			100		160		240		400	
Circuit breaker	Compact NSX100			■		-		-		-	
	Compact NSX160			■		■		-		-	
	Compact NSX250			■		■		■		-	
	Compact NSX400			-		-		-		■	
	Compact NSX630			-		-		-		■	
L Long-time protection											
Pick-up (A) tripping between 1.05 and 1.20 Ir	**Ir**			value depending on trip unit rating (In) and setting on dial							
		In = 100 A	Ir =	40	40	50	60	70	80	90	100
		In = 160 A	Ir =	90	100	110	120	130	140	150	160
		In = 240 A	Ir =	140	150	160	170	180	200	220	240
		In = 400 A	Ir =	260	280	300	320	340	360	380	400
Time delay (s)	**tr**			non-adjustable							
			1.5 Ir	15							
			6 Ir	0.5							
			7.2 Ir	0.35							
Thermal memory				20 minutes before and after tripping							
S_0 Short-time protection with fixed time delay											
Pick-up (A) accuracy ±10 %	**Isd** = Ir x ...			1.5	2	3	4	5	6	7	8	10
Time delay (ms)	**tsd**			non-adjustable: 20							
	Non-tripping time			20							
	Maximum break time			80							
I Non-adjustable instantaneous protection											
Pick-up (A) accuracy ±15 %	**Ii** non-adjustable			1500		1600		2880		4800	
Time delay (ms)	Non-tripping time			10							
	Maximum break time			50							

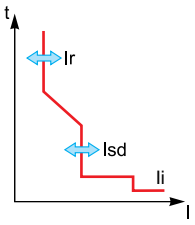

(1) If the trip units are used in high-temperature environments, the Micrologic setting must take into account the thermal limitations of the circuit breaker. See the temperature derating table.

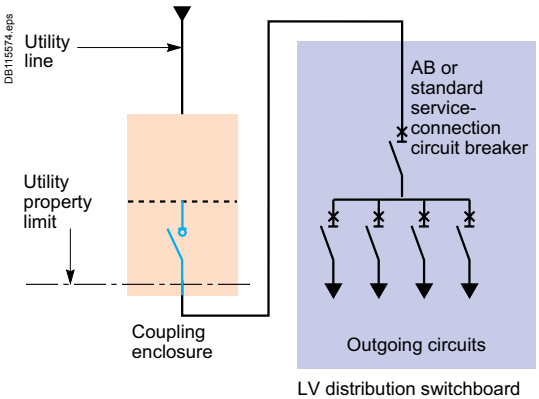

Consumer connection diagram.

Technical details

Advantages of the AB trip unit

■ *Controls the power drawn with respect to contractual power levels. If the contractual level is overrun, the circuit breaker opens and the consumer is not billed excess costs.*

■ *If a short-circuit occurs, the circuit breaker opens and the upstream HRC fuses on utility lines are not affected. No expensive utility servicing is billed to the consumer.*

Special applications
Generator protection with Micrologic 2.2 G

Micrologic G trip units are used for the protection of systems supplied by generators or comprising long cable lengths. They can be mounted on all Compact NSX100/160/250 circuit breakers.
With extensive setting possibilities, Micrologic 5 offers the same functions from 100 to 630 A.
A thermal-magnetic trip unit is also available for the NSX100 to 250 (see page A-16).

DB112118.eps

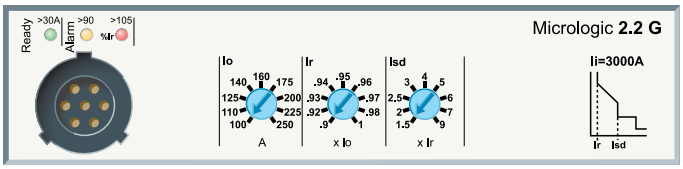

Circuit breakers equipped with Micrologic G trip units protect systems supplied by generators (lower short-circuit currents than with transformers) and distribution systems with long cable lengths (fault currents limited by the impedance of the cable).

Protection

Settings are made using the adjustment dials with fine adjustment possibilities.

Overloads: Long-time protection (Ir)
Inverse-time thermal protection against overloads with an adjustable current pick-up Ir and a very short, non-adjustable time delay **tr** (15 seconds for 1.5 x Ir).

Short-circuits: Short-time protection (Isd) with fixed time delay
Short-circuit protection with an adjustable pick-up **Isd**, delayed 200 ms, in compliance with the requirements of marine classification companies.

Short-circuits: Non-adjustable instantaneous protection (Ii)
Instantaneous short-circuit protection with a fixed pick-up required for generator protection.

Neutral protection
- On 3-pole circuit breakers, neutral protection is not possible.
- On four-pole circuit breakers, neutral protection may be set using a three-position switch:
  - 4P 3D: neutral unprotected
  - 4P 3D + N/2: neutral protection at half the value of the phase pick-up, i.e. 0.5 x Ir
  - 4P 4D: neutral fully protected at Ir.

Indications

Front indications

DB112019.eps

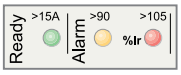

- Green “Ready” LED: flashes slowly when the circuit breaker is ready to trip in the event of a fault.
- Orange overload pre-alarm LED: steady on when I > 90 % Ir.
- Red overload LED: steady on when I > 105 % Ir.

Remote indications
An SDx relay module installed inside the circuit breaker can be used to remote the overload-trip signal.
This module receives the signal from the Micrologic electronic trip unit via an optical link and makes it available on the terminal block. The signal is cleared when the circuit breaker is closed.
The module is described in detail in the section dealing with accessories.

PB103377.eps



SDx remote indication relay module with its terminal block.

Micrologic 2.2 G

Ratings (A)	In at 40 °C (1)		40		100		160		250		
Circuit breaker	Compact NSX100		■		■		-		-		
	Compact NSX160		■		■		■		-		
	Compact NSX250		■		■		■		■		
L Long-time protection											
Pick-up (A) tripping between 1.05 and 1.20 Ir		**Io**	value depending on trip unit rating (In) and setting on dial								
	In = 40 A	Io =	18	18	20	23	25	28	32	36	40
	In = 100 A	Io =	40	45	50	55	63	70	80	90	100
	In = 160 A	Io =	63	70	80	90	100	110	125	150	160
	In = 250 A (NSX250)	Io =	100	110	125	140	150	176	200	225	250
		Ir = Io x ...	9 fine-adjustment settings from 0.9 to 1 for each Io value								
Time delay (s) accuracy 0 to -20 %	**tr**		non-adjustable								
		1.5 x Ir	15								
		6 x Ir	0.5								
		7.2 x Ir	0.35								
Thermal memory			20 minutes before and after tripping								
S_0 Short-time protection with fixed time delay											
Pick-up (A) accuracy ±10 %	**Isd** = Ir x ...		1.5	2	2.5	3	4	5	6	7	8	9
Time delay (ms)	**tsd**		non-adjustable								
	Non-tripping time		140								
	Maximum break time		200								
I Non-adjustable instantaneous protection											
Pick-up (A) accuracy ±15 %	Ii non-adjustable		600		1500		2400		3000		
	Non-tripping time		15 ms								
	Maximum break time		50 ms								

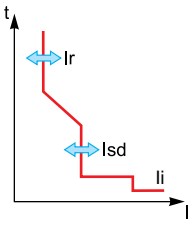

(1) If the trip units are used in high-temperature environments, the Micrologic setting must take into account the thermal limitations of the circuit breaker. See the temperature derating table.

Special applications
Protection of industrial control panels

Compact NSX circuit breakers are also used in industrial control panels.
They serve as an incoming devices or can be combined with contactors to protect motor feeders:
■ compliance with worldwide standards including IEC 60947-2 and UL 508 / CSA 22-2 no. 14
■ overload and short-circuit protection
■ isolation with positive contact indication, making it possible to service machines safely by isolating them from all power sources
■ installation in universal and functional type enclosures
■ NA switch-disconnector version.

DB417468.eps

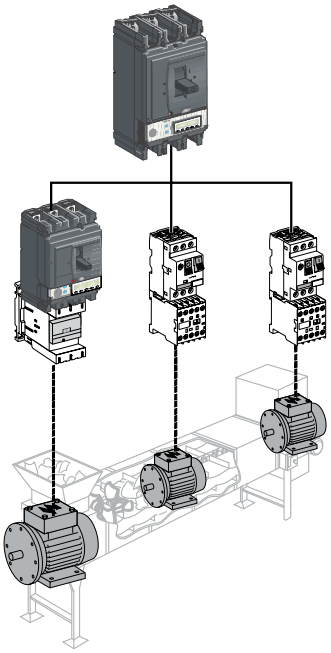

Industrial control panels
Compact NSX circuit breakers equipped for public distribution or motor protection functions as described in the previous pages can be used in industrial control panels. The accessories for the Compact NSX range are suitable for the special needs of these switchboards.

Auxiliaries
All auxiliaries can be added to the circuit breaker by the user:
■ padlocking devices (in the OFF position)
■ rotary handle
■ status-indication auxiliary contacts (ON, OFF and tripped)
■ shunt (MX) or undervoltage (MN) releases
■ early-make or early-break contacts.

Rotary handle
Direct or extended versions for mounting up to 600 mm behind the front:
■ black front with black handle
■ yellow front with red handle (for machine tools or emergency off as per IEC 204 / VDE 0013).
All rotary handles can be padlocked in the OFF position. Optional door interlock, recommended for MCC panels (motor control centres).
When the device is equipped with an extended rotary handle, a control accessory mounted on the shaft makes it possible to operate the device with the door open.
The device can be padlocked in the OFF position in compliance with UL508.

Early-make or early-break contacts
These contacts can be used respectively to supply an MN undervoltage release before the circuit breaker closes or to open the contactor control circuit before the circuit breaker opens.

Special functions
■ Indication of thermal overloads with the SDx module.
■ Early opening of the contactor for overload faults with the SDTAM module.
■ Links with PLCs via the communication system.
■ Measurement of all electrical parameters with Micrologic A and E.
■ Programmable alarms with Micrologic 5 and 6.

Installation in enclosures
Compact circuit breakers can be installed in a metal enclosure together with other devices (contactors, motor-protection circuit breakers, LEDs, etc.) (see page A-104).

Compliance with North American industrial control equipment standards
Compact NSX devices have received UL508 / CSA 22-2 no. 14 approval for industrial control equipment of the "Manual Motor Controller", "Across the Line Starter", "General Use" and "Disconnecting Means" types.
Type NA devices are switch-disconnectors that must always be protected upstream.

UL508 approval

Circuit breakers	Trip units	Approvals
Compact NSX100 to 630 F/N/H	TMD, Micrologic 2, 5 and 6	General Use Motor Disconnecting Means
	NA, MA, Micrologic 1.3 M, 2.2 M, 2.3 M, Micrologic 6.2 E-M and 6.3 E-M	Manual Motor Controller Across the Line Starter Motor Disconnecting Means

DB115234.eps



Table of 3-phase motor ratings in hp (1 hp = 0.7457 kW)

V AC ratings		115	230	460	575
TMD Micrologic 2, 5 and 6	NA, MA Micrologic 1.3 M, 2.2 M, 2.3 M Micrologic 6.2 E-M and 6.3 E-M				
25	25	3	7.5	15	20
50	50	7.5	15	30	40
100	100	15	30	75	100
160	150	25	50	100	150
250	220	40	75	150	200
400	320	-	125	250	300
550	500	-	150	350	500

The deratings indicated on page B-8 and page B-9 apply to TMD, Micrologic 2, 5 and 6 trip units, rated at 40 °C.

Compact NSX circuit breakers may be used on 16 Hz 2/3 systems with special thermal-magnetic and electronic (Micrologic 5 A-Z) trip units.

16 Hz 2/3 networks

Single-phase distribution networks with a frequency of 16 Hz 2/3 are used for railroad applications in certain European countries.

Breaking capacity for 16 Hz 2/3 at 250/500 V

Compact NSX circuit breakers of the 3P 2D or the 3P 3D type protect 16 Hz 2/3 networks at 250 V or 500 V.
They can be equipped with either:
- a TM-D thermal-magnetic trip unit for Compact NSX100 to 250
- or an electronic Micrologic 5.2 A-Z trip unit for Compact NSX100 to 250 or a 5.3 A-Z for Compact NSX400/630.

The possible breaking-capacity performance levels are B, F, N and H as indicated below.

Breaking capacity Icu

Operating voltage		TMD and Micrologic 5 A-Z trip units			
	Performance	B	F	N	H
250 V / 500 V	Icu (kA)	25	36	50	70

Protection

TM-D thermal-magnetic trip units

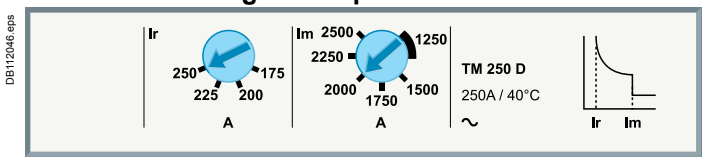

The 16 Hz 2/3 frequency does not modify the thermal settings with respect to those at 50 Hz (see page A-17). The magnetic pick-ups are modified as shown below.

Magnetic protection for Compact NSX 100/160/250 at 50 Hz and at 16 Hz 2/3

Rating (A) In at 40 °C		16	25	32	40	50	63	80	100	125	160	200 250
Pick-up (A) **Im** accur. ±20%		Fixed										Adjustable
NSX100	50Hz	190	300	400	500	500	500	640	800			
	16Hz 2/3	**170**	**270**	**360**	**450**	**450**	**450**	**580**	**720**			
NSX160/250	50Hz	190	300	400	500	500	500	640	800	1250	1250	5 to 10 In
	16 Hz 2/3	**170**	**270**	**360**	**450**	**450**	**450**	**580**	**720**	**1100**	**1100**	**4.5 to 9 In**

Micrologic 5 A-Z trip units

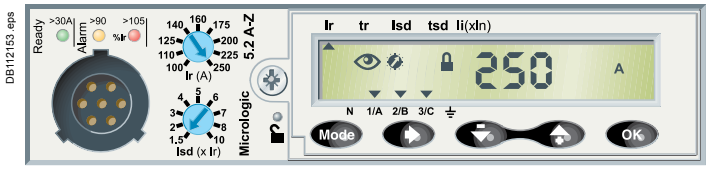

Micrologic 5.2 A-Z and 5.3 A-Z are dedicated to 16 Hz 2/3 networks.
They use a suitable sampling frequency. The protection settings are identical to those of Micrologic 5 A (see page A-21). They also offer a current-measurement function for this specific frequency.

Trip-unit selection

Rating	16	63	100	160	250	400	630
Compact							
NSX100	TM-D						
NSX160		TM-D					
NSX250			TM-D				
NSX100 to 250			Micrologic 5.2 A -Z				
NSX400/630					Micrologic 5.3 A-Z		

Wiring for NSX100 to 630 A

Phase and isolated neutral interrupted- 250 / 500 V

B and F (3P 2D version)

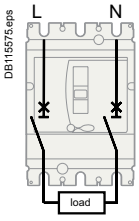

N and H (3P 3D version)

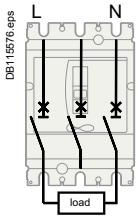

Remark. For an operating voltage > 250 V, the installation must be designed to eliminate all risk of double earth faults.

2 poles in series - Earthed neutral - 250 / 500 V

B and F (3P 2D version)

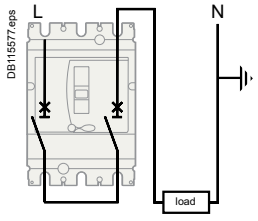

N and H (3P 3D version)

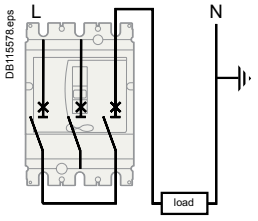

Special applications
Protection of 400 Hz systems

Compact NSX circuit breakers may be used on 400 Hz systems.

400 Hz distribution systems
The main 400 Hz applications are in aeronautics and certain military ships. Modern aircraft have three-phase 115/200 V 400 Hz networks.

Impact on protective devices
Due to the higher frequency, circuit breakers are subjected to additional temperature rise for identical current levels, resulting from higher losses caused by Foucault currents and an increase in the skin effect (reduction in the useful CSA of conductors). To remain within the rated temperature-rise limits of devices, current derating is required.
The power levels of 400 Hz applications rarely exceed a few hundred kW with relatively low short-circuit currents, generally not exceeding four times the rated current.
The standard Compact NSX and Masterpact NT/NW ranges are suitable for 400 Hz applications if derating coefficients are applied to the protection settings. See the derating table below.

Breaking capacity of Compact NSX circuit breakers in 400 Hz, 440 V systems

Circuit breaker	Breaking capacity Icu
NSX100	10 kA
NSX160	10 kA
NSX250	10 kA
NSX400	10 kA
NSX630	10 kA

PB103366.eps



Micrologic TM-D trip unit.

Trip units equipped with thermal-magnetic protection
The 400 Hz current settings are obtained by multiplying the 50 Hz values by the following adaptation coefficient:
- K1 for thermal trip units
- K2 for magnetic trip units.

These coefficients are independent of the trip-unit setting.

Thermal trip units
The current settings are lower at 400 Hz than at 50 Hz (K1 < 1).

Magnetic trip units
The current settings are conversely higher at 400 Hz than at 50 Hz (K2 > 1). Consequently, when the trip units are adjustable, they must be set to the minimum value.

Adaptation coefficients for thermal-magnetic trip units

Circuit breaker	Trip unit	In (A) 50Hz	Thermal at 40°C		Im (A) 50Hz	Magnetic	
			K1	400 Hz		K2	400 Hz
NSX100	TM16G	16	0.95	15	63	1.6	100
	TM25G	25	0.95	24	80	1.6	130
	TM40G	40	0.95	38	80	1.6	130
	TM63G	63	0.95	60	125	1.6	200
NSX100	TM16D	16	0.95	15	240	1.6	300
	TM25D	25	0.95	24	300	1.6	480
	TM40D	40	0.95	38	500	1.6	800
	TM63D	63	0.95	60	500	1.6	800
	TM80D	80	0.9	72	650	1.6	900
	TM100D	100	0.9	90	800	1.6	900
NSX250	TM100D	100	0.9	90	800	1.6	900
	TM160D	160	0.9	144	1250	1.6	2000
	TM200D	200	0.9	180	1000 to 2000	1.6	1600 to 3200
	TM250D	250	0.9	225	1250 to 2500	1.6	2000 to 4000

Example
NSX100 equipped with a TM16G with 50 Hz settings Ir = 16 A and Im = 63 A.
400 Hz settings Ir = 16 x 0.95 = 15 A and Im = 63 A x 1.6 = 100 A.

PB103363.eps



Micrologic 5 E trip unit.

DB125547.eps



OF auxiliary contact.

044313_20_SE.eps



MX or MN voltage release.

DB115579.eps

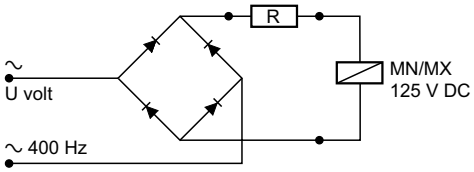

Wiring diagram.

PB103377.eps



SDx remote indication relay module with its terminal block.

Protection (cont.)

Micrologic electronic trip units

Micrologic 2.2, 2.3 or 5.2, 5.3 with A or E measurement functions are suitable for 400 Hz. The use of electronics offers the advantage of greater operating stability when the frequency varies. However the units are still subject to temperature rise caused by the frequency.
The practical consequences are:

- limit settings: see the Ir derating table below
- the long-time, short-time and instantaneous pick-ups are not modified (see page A-19 or page A-21)
- the accuracy of the displayed measurements is 2 % (class II).

Thermal derating: maximum Ir setting

Circuit breaker	Maximum setting coefficient	Max. Ir setting at 400 Hz
NSX100	1	100
NSX250	0.9	225
NSX400	0.8	320
NSX630	0.8	500

Example
An NSX250N, equipped with a Micrologic 2.2, Ir = 250 A at 50 Hz, must be limited to use at Ir = 250 x 0.9 = 225 A.
Its short-time pick-up with fixed time delay is adjustable from 1.5 to 10 Ir (60 to 400 A).
The instantaneous pick-up remains at 3000 A.

OF auxiliary contacts in 400 Hz networks

Electrical characteristics of auxiliary contacts

Contacts		Standard		Low level	
Utilisation cat. (IEC 60947-5-1)		AC12	AC15	AC12	AC15
Operational current (A)	24 V	6	6	5	3
	48 V	6	6	5	3
	110 V	6	5	5	2.5
	220/240 V	6	4	5	2
	380/415 V	6	2	5	1.5

MN and MX voltage releases for Compact NSX100/630 at 400 Hz and 440 V

For circuit breakers on 400 Hz systems, only 125 V DC MN or MX releases may be used. The release must be supplied by the 400 Hz system via a rectifier bridge (to be selected from the table below) and an additional resistor with characteristics depending on the system voltage.

U (V) 400 Hz	Rectifier	Additional resistor
220/240 V	Thomson 110 BHz or General Instrument W06 or Semikron SKB at 1.2/1.3	4.2 kΩ-5 W
380/420 V	Semikron SKB at 1.2/1.3	10.7 kΩ-10 W

Note: other models of rectifier bridges may be used if their characteristics are at least equivalent to those stated above.

SDx indication contacts

The SDx module may be used in 400 Hz systems for voltages from 24 to 440 V.
An SDx relay module installed inside the circuit breaker can be used to remote the overload-trip signal.
This module receives the signal from the Micrologic electronic trip unit via an optical link and makes it available on the terminal block. The signal is cleared when the circuit breaker is closed.
These outputs can be reprogrammed to be assigned to other types of tripping or alarm (see page A-95).

Special applications
Protection of 440 – 690 V applications

Compact NSX HB circuit breaker is designed specifically for the needs of systems operating at 440 to 690 V.

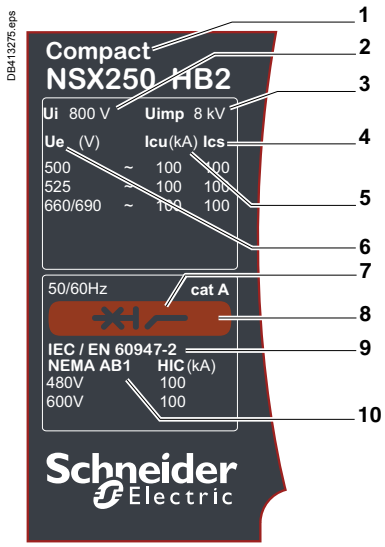

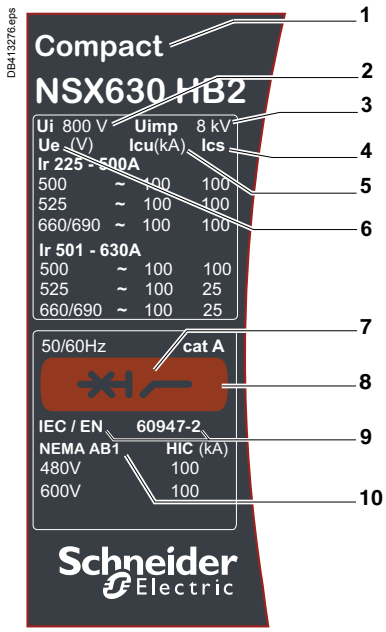

Standardised characteristics indicated on the rating plate:
1. *Type of device: frame size and breaking capacity class.*
2. *Ui: rated insulation voltage.*
3. *Uimp: rated impulse withstand voltage.*
4. *Ics: service breaking capacity.*
5. *Icu: ultimate breaking capacity for various values of the rated operational voltage Ue.*
6. *Ue: operational voltage.*
7. *Circuit breaker-disconnector symbol.*
8. *Colour label indicating the breaking capacity class.*
9. *Reference standard.*
10. *Main standards with which the device complies.*

440-690 V applications
There are three new breaking capacities: R, HB1, and HB2.

Markets
- Marine.
- Oil and gas.
- Data centers.
- Other markets pursuing energy efficiency (water, industrial, etc.).

Ability to service high power densities
- Upgrade voltage from ~415-440 to 690 V system allows:
  - smaller cables can be used
  - reduced cost and space
  - reduced energy loss in transmission
  - motors are more efficient at 690 V.
- Consider 690 V as an alternative MV system:
  - lower cost, smaller footprint, and improved maintenance.

Safety
- IACS (International Association of Classification Societies) change, requires Ics rating for emergency systems:
  - key influence on Marine systems of high Ics ratings
  - continuity of service after 3 faults.

Technology
- Best in class technology and performance:
  - high breaking capacity
  - NSX family consistency of energy metering, alarming and diagnosis.
- Provides alternative to fuse protection at 440 - 690 V applications.

Enhancing solutions
- Using smaller frames for 440-690 V high performance circuits:
  - space and cost benefit
  - NSX family consistency with same NSX accessories.
- 200 kA breaking capacity on R rating will be mainly used for:
  - high power factor applications : around 2.8 instead of 2.2
  - selectivity with Masterpact UR.

Type I & II coordination for motor applications
- Type I & II coordination with Tesys contactors is available up to 690 V.
- Coordination tables are prepared with external overload relays and protection integrated into the Micrologic trip units.
- See complementary bulletin for ratings.

Compliance with standards
Compact NSX circuit breakers and auxiliaries comply with the following:
- international recommendations:
  - IEC 60947-1: general rules
  - IEC 60947-2: circuit breakers
  - IEC 60947-3: switch-disconnectors
  - IEC 60947-4: contactors and motor starters
  - IEC 60947-5.1 and following: control circuit devices and switching elements; automatic control components
- European (EN 60947-1 and EN 60947-2) and corresponding national standards:
  - France NF
  - Germany VDE
  - United Kingdom BS
  - Australia AS
  - Italy CEI
- the specifications of the marine classification companies (Veritas, Lloyd's Register of Shipping, Det Norske Veritas, etc.), standard NF C 79-130 and recommendations issued by the CNOMO organisation for the protection of machine tools.

For U.S. UL, Canadian CSA, Mexican NOM and Japanese JIS standards, please consult us.

Characteristics and performance of Compact NSX circuit breakers from 100 to 630 A

Circuit breakers			NSX100-250 (1)			NSX400			NSX630					
Breaking capacity levels			**R**	**HB1**	**HB2**	**R**	**HB1**	**HB2**	**R**	**HB1**	**HB2**	**R**	**HB1**	**HB2**
Electrical characteristics														
Breaking capacity (kA rms)									**Ir < 500 A**			**Ir > 501 A**		
Icu	AC 50/60 Hz	220/240 V	200	-	-	200	-	-	200	-	-	200	-	-
		380/415 V	200	-	-	200	-	-	200	-	-	200	-	-
		440 V	200	-	-	200	-	-	200	-	-	200	-	-
		500 V	80	85	100	80	85	100	80	85	100	80	85	100
		525 V	65	80	100	65	80	100	65	80	100	65	80	100
		690 V	45	75	100	45	75	100	45	75	100	45	75	100
Service breaking capacity (kA rms)									**Ir < 500 A**			**Ir > 501 A**		
Ics	AC 50/60 Hz	220/240 V	200	-	-	200	-	-	200	-	-	200	-	-
		380/415 V	200	-	-	200	-	-	200	-	-	200	-	-
		440 V	200	-	-	200	-	-	200	-	-	200	-	-
		500 V	80	85	100	80	85	100	80	85	100	80	85	100
		525 V	65	80	100	65	80	100	65	80	100	-	-	-
		690 V	45	75	100	45	75	100	45	75	100	-	-	-

(1) There is no 160 A frame, use the 250 A frame with lower rating trip units.

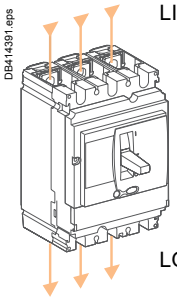

For breaking capacities R/HB1/HB2.

Offer structure

The Compact NSX HB offer has some differences compared to the standard NSX offer.

- 100 A frame and 250 A frame, there is no 160 A frame. The 125 - 160 A trip units are used in a 250 A frame.
- All R, HB1 and HB2 circuit breakers are restricted for use as line-load connection. They can not have power fed from the bottom of the circuit breaker. They will be marked with Line and Load markings.
- Compact NSX400-630 R/HB1/HB2, U > 440 V, Icu 20 kA, Line/Load connection possible with insulation screen (see page B-3).
- All trip units will be assembled in the factory.

Type of protection		Distribution protection		Motor protection	
		TMD	**Micrologic**	**MA**	**Micrologic**
 PB110406_40.eps	Compact NSX100	40-100	2.2: 40-100 5.2 E: 40-100 6.2 E: 40-100	12.5-100	2.2 M: 25, 50, 100 6.2 E-M: 25, 50, 100
	Compact NSX250	125-250	2.2: 100, 160, 250 5.2 E: 100, 160, 250 6.2 E: 100, 160, 250	150, 220	2.2 M: 150, 220 6.2 E-M: 150, 220
 PB111001_44.eps	Compact NSX400	-	2.3: 250, 400 5.3 E: 250, 400 6.3 E: 250, 400	-	1.3 M: 320 2.3 M: 320 6.3 M: 320
	Compact NSX630		2.3: 630 5.3 E: 630 6.3 E: 630		1.3 M: 500 2.3 M: 500 6.3 M: 500

Switch-disconnectors
Overview of applications

A switch-disconnector is a control device that can be used to open and close a circuit under normal operating conditions.
It is suitable for isolation as indicated on the front by the symbol .

Position of switch-disconnectors

Compact NSX switch-disconnectors are used primarily for the following applications:
- busbar coupling and isolation
- isolation of industrial distribution boards and industrial control panels
- isolation of subdistribution boards for modular devices
- isolation of local enclosures
- isolation of final distribution enclosures for commercial applications
- industrial control panel switch-disconnectors.

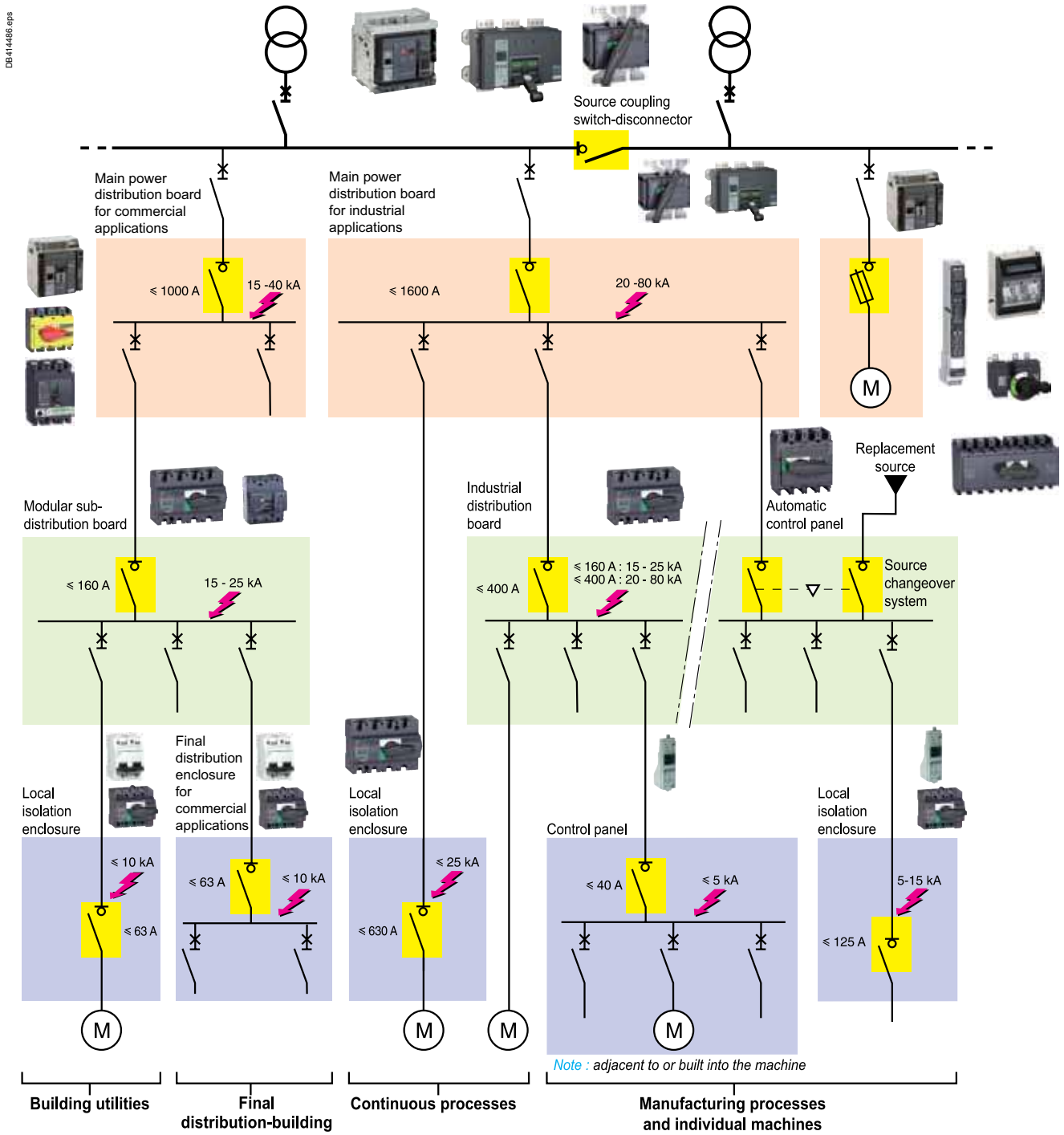

Compact NSX100 to 630 NA switch-disconnectors are available in fixed, plug-in and withdrawable versions. They use the same accessories and offer the same connection possibilities as the circuit-breaker versions. They may be interlocked with another Compact switch-disconnector or circuit breaker to form a source-changeover system.

PB113367_L29.eps



Compact NSX switch-disconnector.

PB108168.eps



Compact NSX switch-disconnector equipped with a motor mechanism module.

PB113368_L30.eps



Compact NSX switch-disconnector equipped with a Vigi module.

Suitability for isolation with positive contact indication

Compact NSX switch-disconnectors are suitable for isolation as defined by standard IEC 60947-3. The corresponding conformity tests guarantee:

- ■ the mechanical reliability of the position indication, i.e. the O (OFF) position indicated by the control device always reflects the open position of the contacts:
  - □ the required distance between contacts is provided
  - □ padlocks may not be installed unless the contacts are open
- ■ the absence of leakage currents
- ■ overvoltage withstand capacity between upstream and downstream connections.

Installation of a rotary handle or a motor mechanism does not alter the reliability of the position-indication system.

Emergency-off function

A Compact NSX NA is combined with an MN release connected to an emergency-off button. In an emergency, an operator at a remote location can interrupt the circuit at rated load to isolate the entire switchboard and the downstream loads.

Motor mechanism

Compact NSX NA devices equipped with a motor mechanism module enable remote closing and opening. This function may be combined with the emergency-off function. In this case, the emergency off function is combined with a closing lock-out that must be intentionally reset (electrical diagram with closing lock-out).

Earth-leakage protection

A Vigi module may be added to a switch-disconnector to monitor all leakage currents in the outgoing circuits of the switchboard on which the switch-disconnector is installed. When the Vigi module detects an earth-leakage current, the switch-disconnector interrupts the load current. This function may be combined with the motor mechanism and the emergency-off function using an MN or MX release.

Switch-disconnector protection

The switch-disconnector can make and break its rated current. For an overload or a short-circuit, it must be protected by an upstream device, in compliance with installation standards.

The circuit-breaker/switch-disconnector coordination tables determine the required upstream circuit breaker. However, due to their high-set magnetic release, Compact NSX100 to 630 A switch-disconnectors are self-protected.

Switch-disconnector utilisation category

Depending on the rated operational current and the mechanical durability (A for frequent operation or B for infrequent operation), standard IEC 60947-3 defines the utilisation categories as shown in the table below. Compact NSX NA switch-disconnectors comply with utilisation categories AC22A or AC23A.

Utilisation categories		Characteristics
Infrequent operation	Frequent operation	
AC-21B	AC-21A	Switching of resistive loads including moderate overloads (cos φ = 0.95)
AC-22B	AC-22A	Switching of mixed resistive and inductive loads, including moderate overloads (cos φ = 0.65)
AC-23B	AC-23A	Switching of motor loads or other highly inductive loads (cos φ = 0,45 or 0,35)

Switch-disconnectors

Characteristics and performance of Compact NSX switch-disconnectors from 100 to 630 NA

Installation standards require upstream protection. However Compact NSX100 to 630 NA switch-disconnectors are self-protected by their high-set magnetic release.

Common characteristics

Rated voltages			
Insulation voltage (V)	**Ui**		800
Impulse withstand voltage (kV)	**Uimp**		8
Operational voltage (V)	**Ue**	AC 50/60 Hz	690
Suitability for isolation		IEC/EN 60947-3	yes
Utilisation category		AC 22 A/AC 23 A - DC 22 A/DC 23 A	
Pollution degree		IEC 60664-1	3

PB113389_L37.eps



Compact NSX100 to 250 NA.

PB108165.eps



Compact NSX400 to 630 NA.

Switch-disconnectors

Electrical characteristics as per IEC 60947-3 and EN 60947-3

Conventional thermal current (A)	**Ith 60 °C**			
Number of poles				
Operational current (A) depending on the utilisation category	**Ie**	AC 50/60 Hz		
			220/240 V	
			380/415 V	
			440/480 V (2)	
			500/525 V	
			660/690 V	
		DC		
			250 V (1 pole)	
			500 poles (2 poles in series)	
			750 V (3 poles in series)	
Short-circuit making capacity (kA peak)	**Icm**	min. (switch-disconnector alone)		
		max. (protection by upstream circuit breaker)		
Rated short-time withstand current (A rms)	**Icw**	for	1 s	
			3 s	
			20 s	
Durability (C-O cycles)	mechanical			
	electrical	AC		
			440 V	In/2
				In
			690 V	In/2
				In
		DC	250 V (1 pole) and	In/2
			500 V (2 poles in series)	In
Positive contact indication				
Pollution degree				

Protection

Add-on earth-leakage protection	By Vigi module		
	By Vigirex relay		

Additional indication and control auxiliaries

Indication contacts			
Voltages releases	MX shunt release		
	MN undervoltage release		
Voltage-presence indicator			
Current-transformer module			
Ammeter module			
Insulation monitoring module			

Remote communication by bus

Device-status indication		
Device remote operation		
Operation counter		

Installation / connections

Dimensions (mm)	fixed, front connections	2/3P
W x H x D		4P
Weight (kg)	fixed, front connections	3P
		4P

Source-changeover systems (see chapter on Source-changeover systems)

Manual source-changeover systems
Remote-operated or automatic source-changeover systems

(1) 2P in 3P case.
(2) Suitable for 480 V NEMA.

Common characteristics

Control			
	Manual	With toggle	■
		With direct or extended rotary handle	■
	Electrical	With remote control	■
Versions			
	Fixed		■
	Withdrawable	Plug-in base	■
		Chassis	■

NSX100NA	NSX160NA	NSX250NA	NSX400NA	NSX630NA
100	**160**	**250**	**400**	**630**
2 (1), 3, 4	2 (1), 3, 4	2 (1), 3, 4	3, 4	3, 4
AC22A / AC23A	**AC22A / AC23A**	**AC22A / AC23A**	**AC22A / AC23A**	**AC22A / AC23A**
100	160	250	400	630
100	160	250	400	630
100	160	250	400	630
100	160	250	400	630
100	160	250	400	630
DC22A / DC23A	**DC22A / DC23A**	**DC22A / DC23A**	**-**	**-**
100	160	250	-	-
100	160	250	-	-
100	160	250	-	-
2.6	3.6	4.9	7.1	8.5
330	330	330	330	330
1800	2500	3500	5000	6000
1800	2500	3500	5000	6000
690	960	1350	1930	2320
50000	40000	20000	15000	15000
AC22A / AC23A	**AC22A / AC23A**	**AC22A / AC23A**	**AC22A / AC23A**	**AC22A / AC23A**
35000	30000	15000	10000	6000
20000	15000	7500	5000	3000
15000	10000	6000	5000	3000
8000	5000	3000	2500	1500
10000	10000	10000	-	-
5000	5000	5000	-	-
■	■	■	■	■
3	3	3	3	3
■			■	
■			■	
■			■	
■			■	
■			■	
■			■	
■			■	
■			■	
■			■	
■			■	
■			■	
■			■	
105 x 161 x 86			140 x 255 x 110	
140 x 161 x 86			185 x 255 x 110	
1.5 to 1.8			5.2	
2.0 to 2.2			6.8	
■			■	
■			■	

Source-changeover systems
Presentation

PB191613-50.eps



Some installations use two supply sources to counter the temporary loss of the main supply.
A source-changeover system is required to safely switch between the two sources.
The replacement source can be a generator set or another network.

Manual source-changeover system or M: Manual Transfer Switching Equipment

The simplest way to switch the load.
It is controlled manually by an operator.
The time required to switch from the S1 source to S2 source is variable.

System
2 or 3 mechanically interlocked circuit breakers or
2 switch-disconnectors.

Applications
Small commercial buildings and small and medium industrial activities where the need for continuity of service is significant but not a priority.

65587-117.eps



Automatic source-changeover system or A: Automatic Transfer Switching Equipment

An automatic controller may be added to a remote operated source-changeover system. It is possible to automatically control source transfer according to programmed (dedicated controllers) or programmable (PLC) operating modes. These solutions ensure optimum energy management.
The time required to switch from the S1 source to S2 source is fixed.

System
2 or 3 circuit breakers linked by an electrical interlocking system. A mechanical interlocking system protects also against incorrect manual operations, with an automatic control system (dedicated controllers).

Applications
Large infrastructures, industry, critical buildings & process where the continuity of service is a priority.

P109832-104.eps



Remote source-changeover system or R: Remote Transfer Switching Equipment

In this case, no direct human intervention is required. The time required to switch from the S1 source to S2 source is fixed.

System
2 or 3 circuit breakers linked by an electrical interlocking system. A mechanical interlocking system protects also against incorrect manual operations. In this case is necessary to add a PLC controller not dedicated for source-changeover application.

Applications
Industry & Infrastructure where continuity of service requirements are meaningful but not a priority.

PB113435.eps



Interlocking of two or three toggle-controlled devices.

Interlocking of two or three toggle-controlled devices

Interlocking system

Two devices can be interlocked using this system. Two identical interlocking systems can be used to interlock three devices installed side by side.

Authorised positions:

- one device closed (ON), the others open (OFF)
- all devices open (OFF).

The system is locked using one or two padlocks (shackle diameter 5 to 8 mm).

This system can be expanded to more than three devices.

There are two interlocking-system models:

- one for Compact INS/INV
- one for Compact NSX100 to NSX250
- one for Compact NSX400 to NSX630.

Combinations of Normal and Replacement devices

All toggle-controlled fixed or plug-in Compact NSX100 to NSX630 circuit breakers and switch-disconnectors of the same frame size can be interlocked. The devices must be either all fixed or all plug-in versions.

PB113418.eps



Interlocking of two devices with rotary handles.

Interlocking of two devices with rotary handles

Interlocking system

Interlocking involves padlocking the rotary handles on two devices which may be either circuit breakers or switch-disconnectors.

Authorised positions:

- one device closed (ON), the other open (OFF)
- both devices open (OFF).

The system is locked using up to three padlocks (shackle diameter 5 to 8 mm).

There are two interlocking-system models:

- one for Compact INS/INV
- one for Compact NSX100 to NSX250
- one for Compact NSX400 to NSX630.

Combinations of Normal and Replacement devices

All rotary-handle fixed or plug-in Compact NSX100 to NSX630 circuit breakers and switch-disconnectors of the same frame size can be interlocked. The devices must be either all fixed or all plug-in versions.

PB113828.eps



Interlocking with keylocks.

Interlocking of a number of devices using keylocks (captive keys)

Interlocking using keylocks is very simple and makes it possible to interlock two or more devices that are physically distant or that have very different characteristics, for example medium-voltage and low-voltage devices or a Compact NSX100 to NSX630 switch-disconnector.

Interlocking system

Each device is equipped with an identical keylock and the key is captive on the closed (ON) device. A single key is available for all devices. It is necessary to first open (OFF position) the device with the key before the key can be withdrawn and used to close another device.

A system of wall-mounted captive key boxes makes a large number of combinations possible between many devices.

Combinations of Normal and Replacement devices

All rotary-handle Compact NSX100 to NSX630 circuit breakers and switch-disconnectors can be interlocked between each other or with any other device equipped with the same type of keylock.

PB113417.eps



Interlocking on a base plate.

Interlocking of two devices on a base plate

Interlocking system

A base plate designed for two Compact NSX devices can be installed horizontally or vertically on a mounting rail. Interlocking is carried out on the base plate by a mechanism located behind the devices. In this way, access to the device controls and trip units is not blocked.

Combinations of Normal and Replacement devices

All rotary-handle and toggle-controlled Compact NSX100 to NSX630 circuit breakers and switch-disconnectors can be interlocked. Devices must be either all fixed or all plug-in versions, with or without earth-leakage protection or measurement modules.

An adaptation kit is required to interlock:

- two plug-in devices
- a Compact NSX100 to NSX250 with an NSX400 to NSX630.

Connection to the downstream installation can be made easier using a coupling accessory (see next page).

Source-changeover systems
Mechanical and electrical interlocking for source-changeover systems

PB113419.eps



Remote-operated source-changeover system.

It is made up of two devices with motor mechanisms, mounted on a base plate and combined with:
- an electrical interlocking unit
- optional mechanical interlocking system.

Electrical interlocking unit (IVE)
Interlocks two devices equipped with motor mechanisms and auxiliary contacts. The IVE unit is mandatory to ensure the necessary time-delays required for safe switching.

Mechanical interlocking system
The mechanical interlocking system is strongly recommended to limit the effects of design or wiring errors and to avoid manual switching errors.

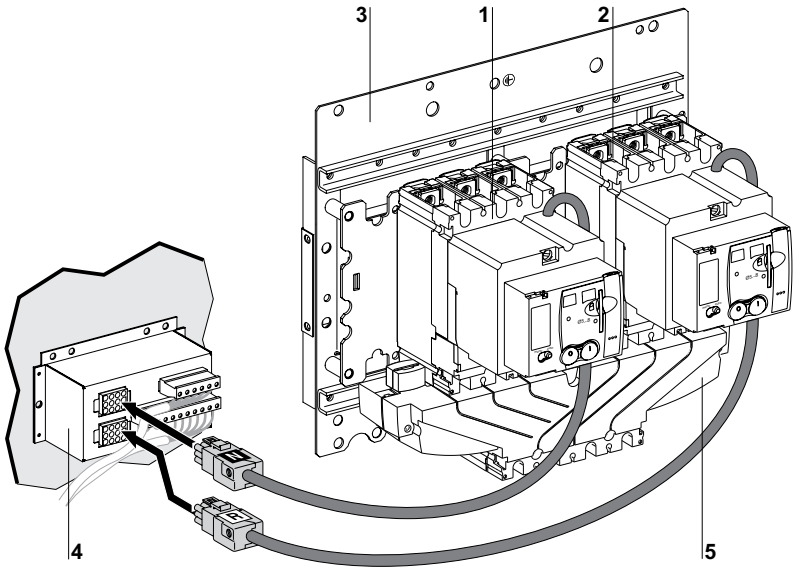

1 *Circuit breaker QS1 equipped with a motor mechanism and auxiliary contacts, connected to the S1 source*
2 *Circuit breaker QS2 equipped with a motor mechanism and auxiliary contacts, connected to the S2 source*
3 *Base plate with mechanical interlocking*
4 *Electrical interlocking unit IVE*
5 *Coupling accessory (downstream connection)*

DB413568.eps

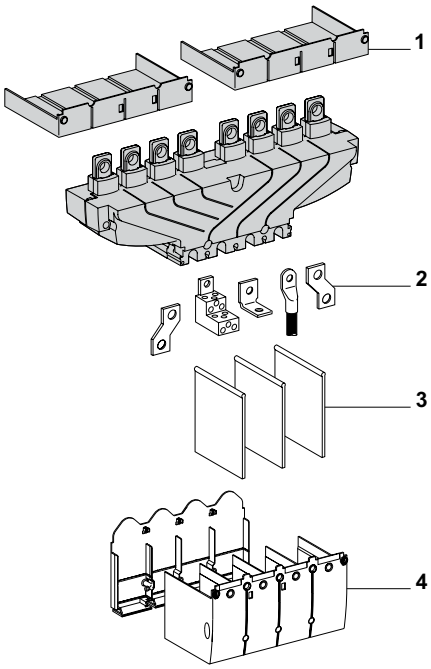

1 *Short terminal shields*
2 *Terminals*
3 *Interphase barriers*
4 *Long terminal shields*

Downstream coupling accessory
This accessory simplifies connection to bars and cables with lugs.
It may be used to couple two circuit breakers of the same size.
Pitch between outgoing terminals:
- Compact NSX100 to NSX250: 35 mm
- Compact NSX400 to NSX630: 45 mm.

For Compact NSX circuit breakers, the downstream coupling accessory can be used only with **fixed versions**.

Connection and insulation accessories
The coupling accessory can be fitted with the same connection and insulation accessories as the circuit breakers.

Possible uses	Downstream coupling	
	Possible mounting	Outgoing pitch (mm)
Remote-operated source-changeover systems		
NSX100 to NSX250	■	35
NSX400 to NSX630	■	45

By combining a remote-operated source-changeover system with an integrated BA or UA automatic controller, it is possible to automatically control source transfer according to user-selected sequences.

DB403809.eps



BA controller.

DB403810.eps



UA controller.

PB100857_35_SE.eps



Auxiliary control plate for a BA or UA controller.

Functions of the BA and UA controllers

Controller		BA	UA
Compatible circuit breakers		Compact NSX100 to 630 circuit breakers	
4-position switch			
Automatic operation		■	■
Forced operation on Normal source		■	■
Forced operation on Replacement source		■	■
Stop (both Normal and Replacement sources OFF)		■	■
Automatic operation			
Monitoring of the Normal source and automatic transfer from one source to the other		■	■
Engine generator set start-up control			■
Delayed shutdown (adjustable) of engine generator set			■
Load shedding and reconnection of non-priority loads			■
Transfer to Replacement source if one of the Normal source phases is absent			■
Test			
By opening the P25M circuit breaker upstream of the controller		■	■
By pressing the test button on the front of the controller			■
Indications			
Circuit-breaker status indication on the front of the controller: ON, OFF, fault trip		■	■
Automatic-mode indication contact		■	■
Other functions			
Selection of type of Normal source (single-phase or three-phase)			■
Voluntary transfer to Replacement source		■	■
Forced operation on Normal source if Replacement source is not operational			■
Additional test contact (not part of controller) Transfer to Replacement source only if contact closed (e.g. for a UR frequency check)		■	■
Setting of maximum start-up time for the Replacement-source			■
Power supply			
Control voltages [(1)]	220 to 240 V 50/60 Hz	■	■
	380 to 415 V 50/60 Hz	■	■
	440 V 60 Hz	■	■
Operating thresholds			
Undervoltage	0.35 Un ⩽ voltage ⩽ 0.7 Un	■	■
Phase failure	0.5 Un ⩽ voltage ⩽ 0.7 Un		■
Voltage presence	voltage ⩾ 0.85 Un	■	■
Characteristics of output contacts (dry, volt-free contacts)			
Rated thermal current (A)	8		
Minimum load	10 mA at 12 V		

		AC				DC	
Utilisation category (IEC 60947-5-1)		AC12	AC13	AC14	AC15	DC12	DC13
Operational current (A)	24 V	8	7	5	6	8	2
	48 V	8	7	5	5	2	-
	110 V	8	6	4	4	0.6	-
	220/240 V	8	6	4	3	-	-
	250 V	-	-	-	-	0.4	-
	380/415 V	5	-	-	-	-	-
	440 V	4	-	-	-	-	-
	660/690 V	-	-	-	-	-	-

(1) The controller is powered by the ACP control plate. The same voltage must be used for the ACP plate, the IVE unit and the circuit-breaker operating mechanisms. If this voltage is the same as the source voltage, then the "Normal" and "Replacement" sources can be used directly for the power supply. If not, an isolation transformer must be used.

Accessories and auxiliaries
Overview of Compact NSX100 to 630 fixed version

Insulation accessories ▶ page A-87

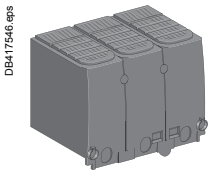

Sealable terminal shields



Interphase barriers

Electrical auxiliaries ▶ page A-94



Indication contact



Voltage release

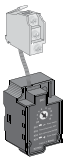

SDTAM module

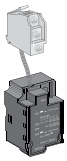

SDx module

Protection and measurements ▶ page A-100

(1)

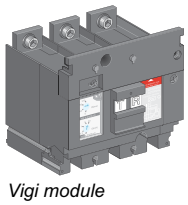

Vigi module

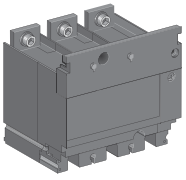

Current-transformer module

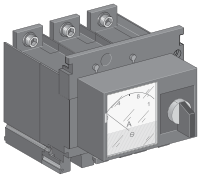

Ammeter module

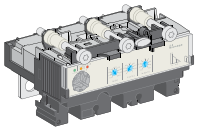

Micrologic 2 trip unit

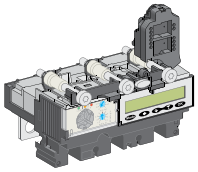

Micrologic 5 / 6 trip unit

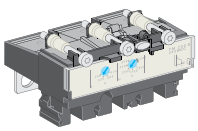

TM-D, TM-G trip unit

(1) Up to 525 V.

Connection ▶ page A-84

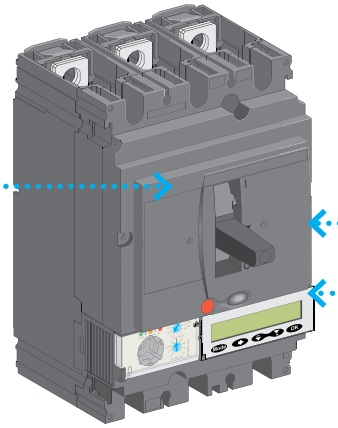



Terminal extensions

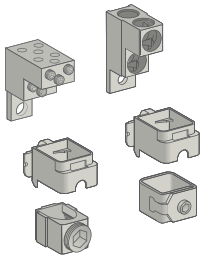

Cable connectors

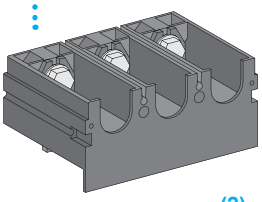

One-piece spreader (2)

(2) For 100-250 V only.

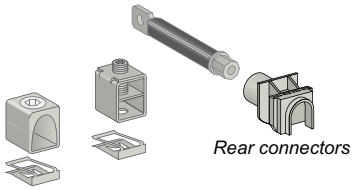

Cable connectors

Rear connectors

Communication and display ▶ page A-26

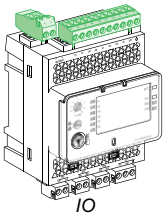

IO

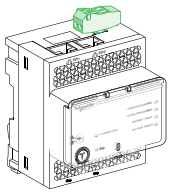

IFE

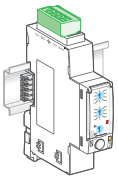

IFM



NSX cord

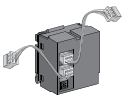

BSCM module



FDM128

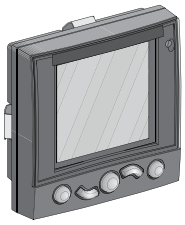

FDM121

Control accessories ▶ page A-96

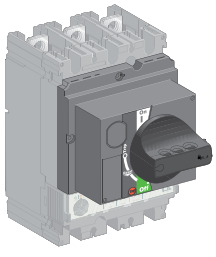

Direct rotary handle

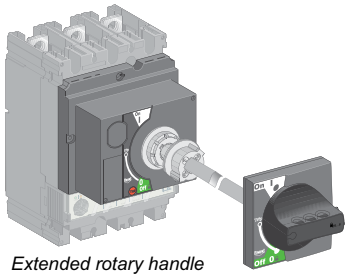

Extended rotary handle

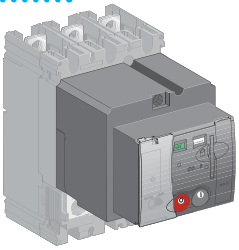

Motor mechanism

Accessories and auxiliaries

Overview of Compact NSX100 to 630 plug-in and withdrawable versions

Insulation accessories ▶ page A-87

DB417469.eps

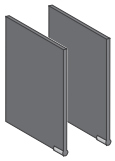

Interphase barriers

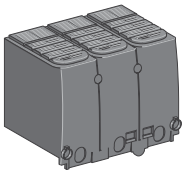

Sealable long terminal shields for plug-in base

Electrical accessories ▶ page A-92

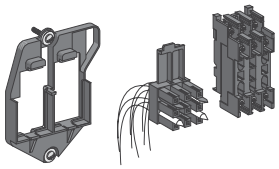

Automatic withdrawable auxiliary connector

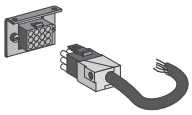

Manual auxiliary connector

Mechanical accessories ▶ page A-83

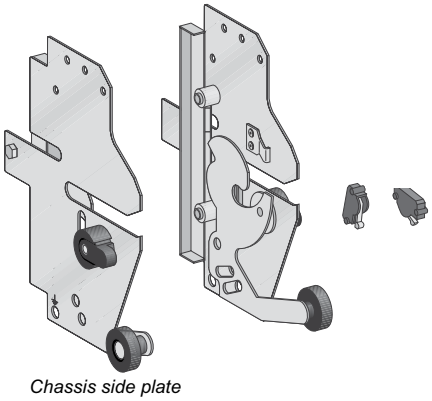

Chassis side plate

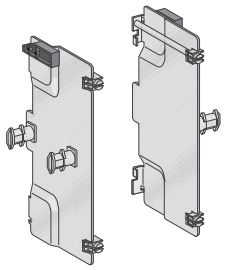

Circuit-breaker side plate

Connection ▶ page A-84 and page A-86

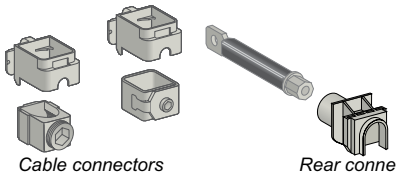

Cable connectors

Rear connectors

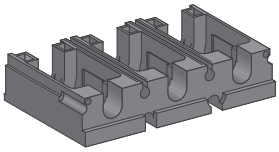

Adapter

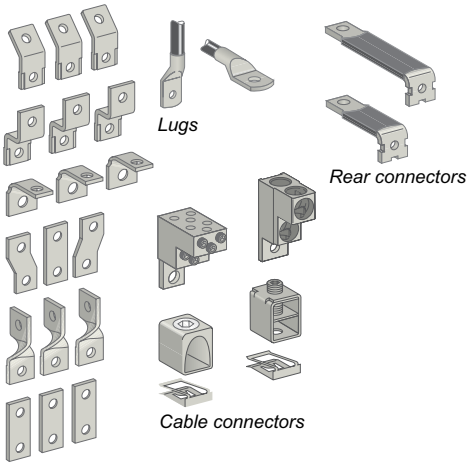

Lugs

Rear connectors

Cable connectors

Terminal extensions

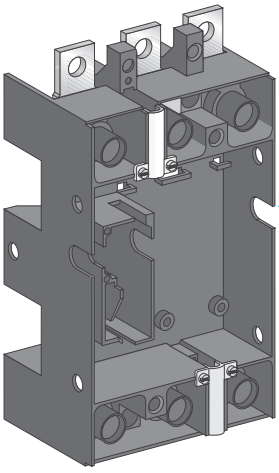

Plug-in base

Circuit breaker

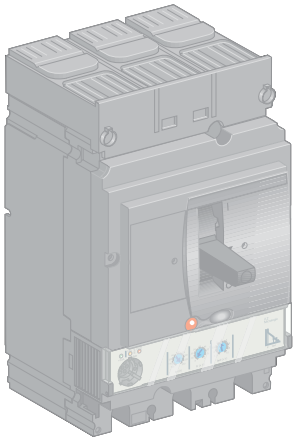

Power connection accessories

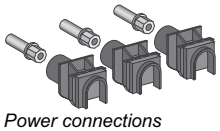

Power connections

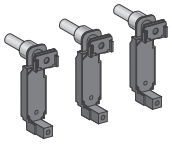

Power connections for Vigicompact

Accessories and auxiliaries
Device installation

Compact NSX circuit breakers may be installed horizontally, vertically or flat on their back, without derating performance levels.
There are three installation versions:
- fixed
- plug-in (on a base)
- withdrawable (on a chassis).

For the last two, components must be added (base, chassis) to the fixed version.
Many connection components are shared by the three versions.

PB105112.eps



Fixed Compact NSX250.

DB112208.eps

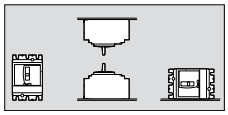

Installation positions.

PB105121.eps



Plug-in Compact NSX250.

DB112209.eps

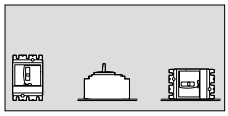

Installation positions.

Fixed circuit breakers

Fixed circuit breakers are designed for standard connection using bars or cables with lugs. Bare-cable connectors are available for connection to bare copper or aluminium cables.
For connection of large cables, a number of solutions with spreaders may be used for both cables with lugs or bare cables.

DB112200.eps

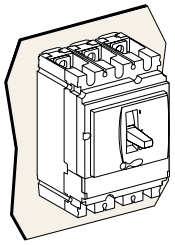

Mounting on a backplate.

DB112201.eps

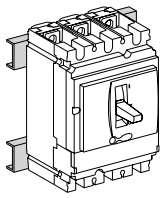

Mounting on rails.

DB112202.eps

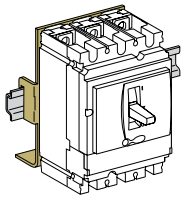

Mounting on DIN rail (with adapter).

DB112203.eps

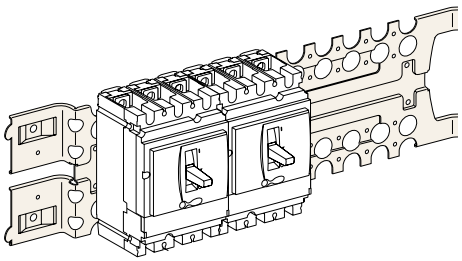

Mounting on a Prisma mounting plate.

DB112204.eps

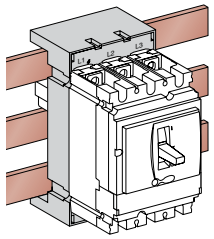

Mounting on busbars with an adapter.

Plug-in circuit breakers

The plug-in version makes it possible to:
- extract and/or rapidly replace the circuit breaker without having to touch the connections on the base
- allow for the addition of future circuits by installing bases that will be equipped with a circuit breaker at a later date
- isolate the power circuits when the device is mounted on or through a panel. It acts as a barrier for the connections of the plug-in base. Insulation is made complete by the mandatory short terminal shields on the device. The degrees of protection are:
  - circuit breaker plugged in = IP4
  - circuit breaker removed = IP2
  - circuit breaker removed, base equipped with shutters = IP4.

Parts of a plug-in configuration

A plug-in configuration is made by adding a "plug-in kit" to a fixed device.
To avoid connecting or disconnecting the power circuits under load conditions, a safety trip causes automatic tripping if the device is ON, before engaging or withdrawing it. The safety trip, supplied with the kit, must be installed on the device. If the device is disconnected, the safety trip does not operate. The device can be operated outside the switchboard.

Accessories

Optional insulation accessories are available.
- Terminal shields to protect against direct contact.
- Interphase barriers to reinforce insulation between phases and protect against direct contact.

Mounting

DB112206.eps

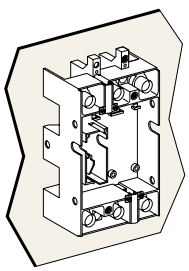

Mounting on a backplate.

DB112205.eps

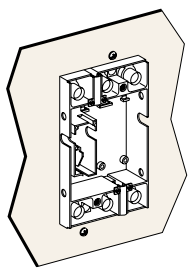

Mounting through a front panel.

DB112207.eps

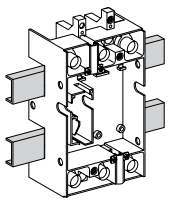

Mounting on rails.

PB105122.eps



Withdrawable Compact NSX250.

DB112209.eps

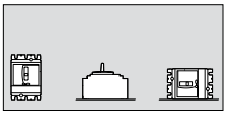

Installation positions.

DB112210.eps

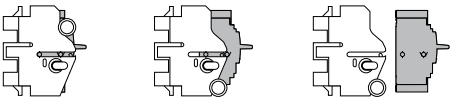

Connected. *Disconnected.* *Removed.*

Withdrawable circuit breakers

In addition to the advantages provided by the base, installation on a chassis facilitates handling. It offers three positions, with transfer from one to the other after mechanical unlocking:

- ■ connected: the power circuits are connected
- ■ disconnected: the power circuits are disconnected, the device can be operated to check auxiliary operation
- ■ removed: the device is free and can be removed from the chassis.

Parts of a withdrawable configuration

A withdrawable configuration requires two side plates installed on the base and two sides plates mounted on the circuit breaker. Similar to the plug-in version, a safety trip causes automatic tripping if the device is ON, before engaging or withdrawing it, and enables device operation in the disconnected position.

Accessories

Accessories are the same as for the base, with in addition:

- ■ auxiliary contacts for installation on the fixed part, indicating the "connected" and "disconnected" positions
- ■ locking by 1 to 3 padlocks (shackle diameter 5 to 8 mm), to:
  - □ prevent insertion for connection
  - □ lock the circuit breaker in connected or disconnected position
- ■ toggle collar for circuit breakers with a toggle mounted through a front panel, intended to maintain the degree of protection whatever the position of the circuit breaker (supplied with a toggle extension)
- ■ telescopic shaft for extended rotary handles. The door can then be closed with the device in the connected and disconnected positions.

DB111369.eps

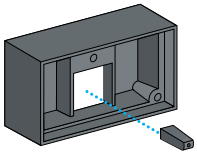

Protection collar for toggle and toggle extension to provide IP4 in the connected and disconnected positions.

DB112219.eps

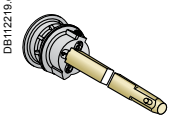

Telescopic shaft.

Mounting

DB112220.eps

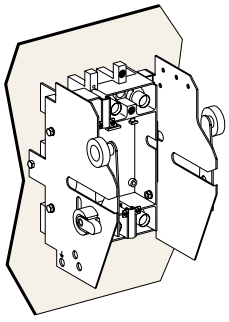

Mounting on a backplate.

DB112221.eps

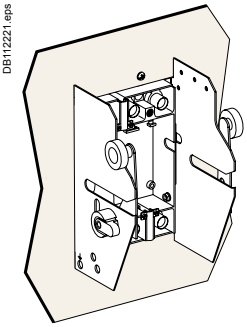

Mounting through a front panel.

DB112312.eps

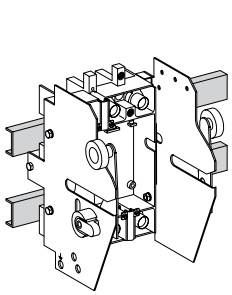

Mounting on rails.

Accessories and auxiliaries
Connection of fixed devices

Fixed circuit breakers are designed for standard front connection using bars or cables with lugs.
Cable connectors are available for bare cables. Rear connection is also possible.

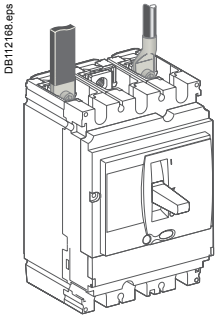
DB112168.eps


DB112169.eps

Insulated bar.

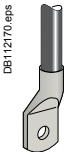
DB112170.eps

Small lug for copper cables.

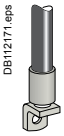
DB112171.eps

Small lug for Al cables.

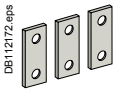
DB112172.eps

Straight terminal extensions.

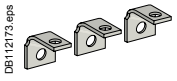
DB112173.eps

Right-angle terminal extensions.

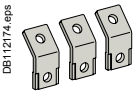
DB112174.eps

45° terminal extensions.

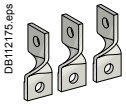
DB112175.eps

Edgewise terminal extensions.

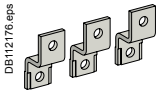
DB112176.eps

Double-L terminal extensions.

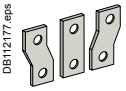
DB112177.eps

Spreaders.

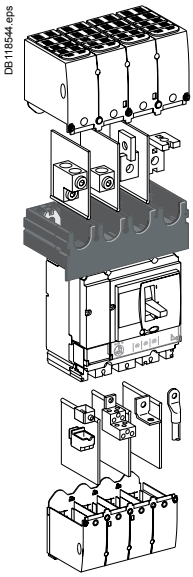
DB118544.eps

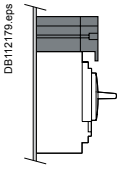
DB112179.eps

Mounting at the back of a switchboard.

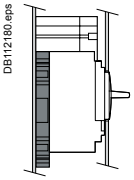
DB112180.eps

Mounting behind the front panel with a raiser.

Front connection

Bars or cables with lugs

Standard terminals

Compact NSX100 to 630 come with terminals comprising snap-in nuts with screws:
- Compact NSX100: M6 nuts and screws. Compact NSX160/250: M8 nuts and screws
- Compact NSX400/630: M10 nuts and screws.

These terminals may be used for:
- direct connection of insulated bars or cables with lugs
- terminal extensions offering a wide range of connection possibilities.

Interphase barriers or terminal shields are recommended. They are mandatory for certain connection accessories (in which case the interphase barriers are provided).

Bars

When the switchboard configuration has not been tested, insulated bars are mandatory.

Maximum size of bars

Compact NSX circuit breaker		100/160/250	400/630
Without spreaders	pitch (mm)	35	45
	maximum bar size (mm)	20 x 2	32 x 6
With spreaders	pitch (mm)	45	52.5
	maximum bar size (mm)	32 x 2	40 x 6

Crimp lugs

There are two models, for aluminium and copper cables.
It is necessary to use narrow lugs, compatible with device connections. They must be used with interphase barriers or long terminal shields. The lugs are supplied with interphase barriers and may be used for the types of cables listed below.

Cable sizes for connection using lugs

Compact NSX circuit breaker		100/160/250	400/630
Copper cables	size (mm²)	120, 150, 185	240, 300
	crimping	hexagonal barrels or punching	
Aluminium cables	size (mm²)	120, 150, 185	240, 300
	crimping	hexagonal barrels	

Terminal extensions

Extensions with anti-rotation ribs can be attached to the standard terminals to provide numerous connection possibilities in little space:
- straight terminal extensions
- right-angle terminal extensions
- edgewise terminal extensions
- double-L extensions
- 45° extensions.

Spreaders

Spreaders may be used to increase the pitch:
- NSX100 to 250: the 35 mm pitch can be increased to 45 mm
- NSX400/630: the 45 mm pitch can be increased to 52 or 70 mm.

Bars, cable lugs or cable connectors can be attached to the ends.

One-piece spreader for NSX100 to 250

Connection of large cables may require an increase in the distance between the device terminals.
The one-piece spreader is the means to:
- increase the 35 mm pitch of the NSX100 to 250 circuit-breaker terminals to the 45 mm pitch of a NSX400/630 device
- use all the connection and insulation accessories available for the next largest frame size (lugs, connectors, spreaders, right-angle and edgewise terminal extensions, terminal shields and interphase barriers).

It may also be used for Compact INS switch-disconnectors.
Equipped with a single-piece spreader, Compact NSX devices can be mounted:
- at the back of a switchboard
- behind the front panel with a raiser.

The one-piece spreader is also the means to:
- align devices with different frame sizes in the switchboard
- use the same mounting plate, whatever the device.

Pitch (mm) depending on the type of spreader

Compact NSX circuit breaker	NSX100 to 250	NSX100 to 630
Without spreaders	35	45
With spreaders	45	52.5 or 70
With one-piece spreader	45	-

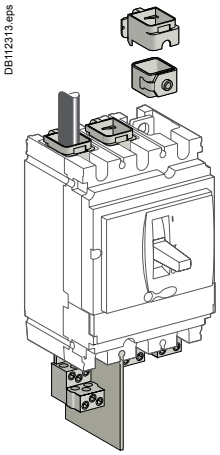



Bare cable.

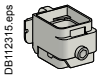



1-cable connector for NSX100 to 250 NSX400/630.

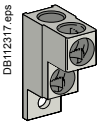

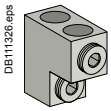

2-cable connector for NSX100 to 250 NSX400/630.

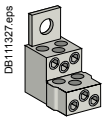

Distribution connector for NSX100 to 250.

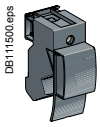

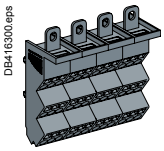

Linergy DX 100/160 A and Linergy DP 250 A distribution blocks.

Bare cables

For bare cables (without lugs), the prefabricated bare-cable connectors may be used for both copper and aluminium cables.

1-cable connectors for Compact NSX100 to 250
The connectors snap directly on to the device terminals or are secured by clips to right-angle and straight terminal extensions as well as spreaders.

1-cable connectors for Compact NSX400 to 630
The connectors are screwed directly to the device terminals.

2-cable connectors for Compact NSX100 to 250 and 400/630
The connectors are screwed to device terminals or right-angle terminal extensions.

Distribution connectors for Compact NSX100 to 250
These connectors are screwed directly to device terminals. Interphase barriers are supplied with distribution connectors, but may be replaced by long terminal shields. Each connector can receive six cables with cross-sectional areas ranging from 1.5 to 35 mm² each.

Linergy DX and Linergy DP distribution block for Compact NSX100 to 630
Linergy DX and Linergy DP connects directly to device terminals.
It is used to connect up to six or nine flexible or rigid cables with cross-sectional areas not exceeding 10 mm² or 16 mm², to each pole.
Connection is made to spring terminals without screws.

Maximum size of cables depending on the type of connector

Compact NSX circuit breaker		100/160	250	400	630
Steel connectors	1.5 to 95 mm²	■			
Aluminium connectors	25 to 95 mm²	■	■		
	120 to 185 mm²	■	■		
	2 cables 50 to 120 mm²	■	■		
	2 cables 35 to 240 mm²			■	■
	35 to 300 mm²			■	■
Distribution connectors	6 cables 35 mm²	■	■		
Linergy DX and Linergy DP distribution blocks	6 or 9 cables 10/16 mm²	■	■		

Four positions.

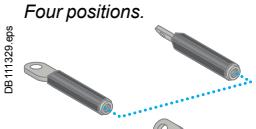

Two lengths.

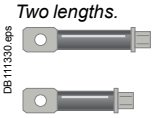



Cable connector.

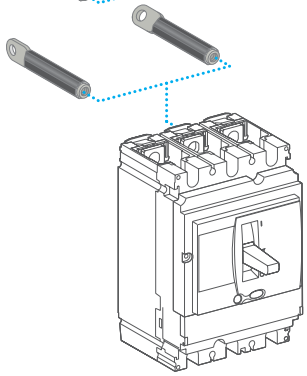

Rear connection.

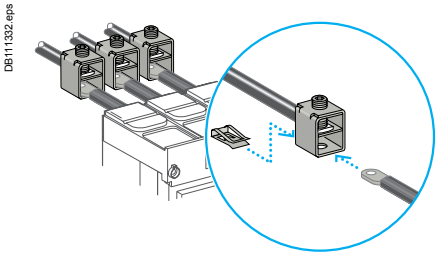

Connection of bare cables to NSX100 to 250 by clips.

Rear connection

Device mounting on a backplate with suitable holes enables rear connection.

Bars or cables with lugs

Rear connections for bars or cables with lugs are available in two lengths. Bars may be positioned flat, on edge or at 45° angles depending on how the rear connections are positioned.
The rear connections are simply fitted to the device connection terminals. All combinations of rear connection lengths and positions are possible on a given device.

Bare cables

For the connection of bare cables, the 1-cable connectors for Compact NSX100 to 250 may be secured to the rear connections using clips.

Accessories and auxiliaries
Connection of withdrawable and plug-in devices

Connection is identical for both withdrawable and plug-in versions. The same accessories as for fixed devices may be used.

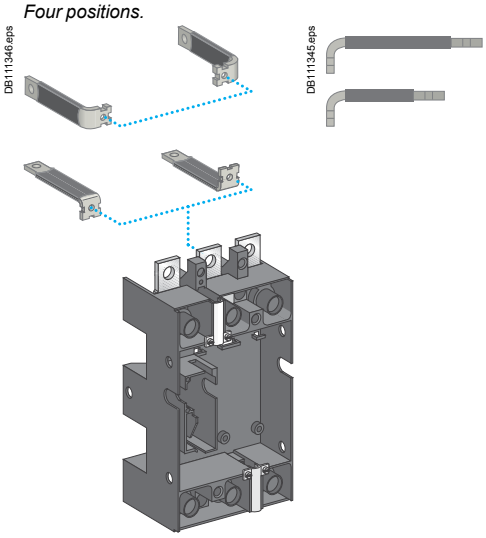

Four positions.

Bars or cables with lugs

The plug-in base is equipped with terminals which, depending on their orientation, serve for front and rear connection.
For rear connection of a base mounted on a backplate, the terminals must be replaced by insulated, long right-angle terminal extensions.
For Compact NSX630 devices, connection most often requires the 52.5 or 70 mm pitch spreaders.

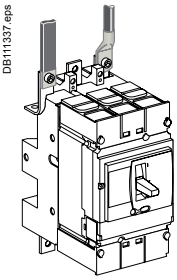

Front connection.

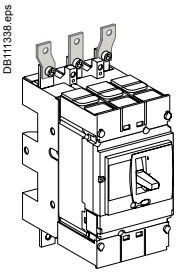

Front connection with spreaders.

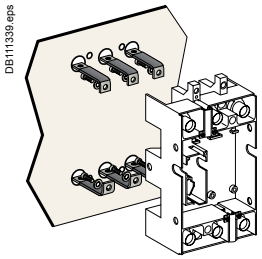

Rear connection of a base mounted on a backplate.

Connection accessories
All accessories for fixed devices (bars, lugs, terminal extensions and spreaders) may be used with the plug-in base (see page A-84 and page A-85).

Bare cables

All terminals may be equipped with bare-cable connectors. See the "Connection of fixed devices" section.

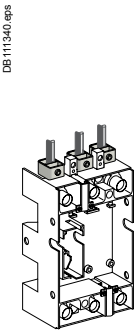

With a 100 to 250 A base.

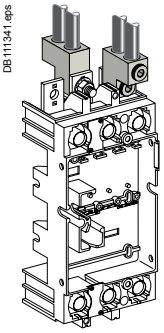

With a 400/630 A base.

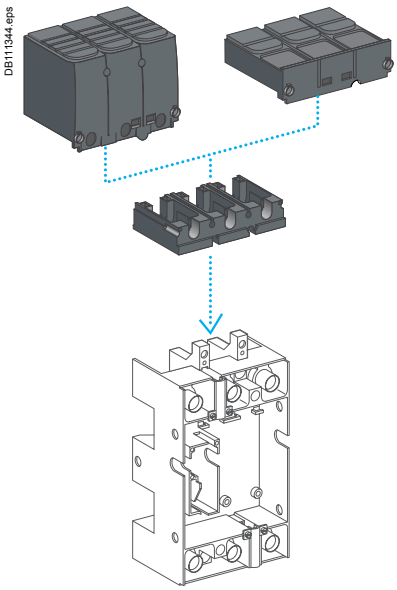

Adapter for plug-in base

The adapter is a plastic component for the 100 to 250 base and the 400/630 base that enables use of all the connection accessories of the fixed device.
It is required for interphase barriers and the long and short terminal shields.

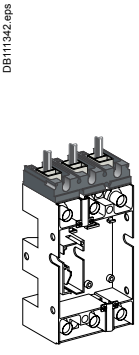

Adapter for 100 to 250 A - 3P base.
Connection with bars or cables with lugs.

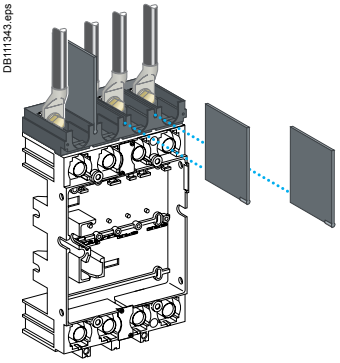

Adapter for 400/630 A - 4P base.
Connection with spreaders and interphase barriers.

Terminal shields are identical for fixed and plug-in/withdrawable versions and cover all applications up to 1000 V.
They exist for the 100 to 250 A and 400/630 A ratings, in long and short versions.

DB111347.eps

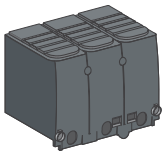

Long terminal shields.

DB111348.eps

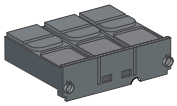

Short terminal shields.

DB111349.eps

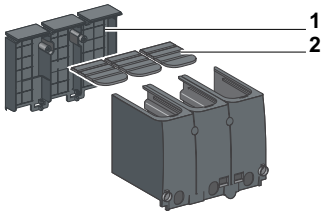

1 *Partially cut removable squares.*
2 *Grids with break marks.*

DB111355.eps

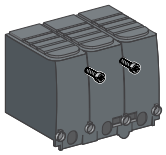

Assembled with captive screws.

Terminal shields

Insulating accessories used for protection against direct contact with power circuits.
They provide IP40 degree of protection and IK07 mechanical impact protection.

Terminal-shield types

Compact NSX100 to 250 and NSX400/630 3P or 4P can be equipped with:
- short terminal shields
- long terminal shields.

All terminal shields have holes or knock-outs in front for voltage-presence indicators.

Short terminal shields

They are used with:
- plug-in and withdrawable versions in all connection configurations
- fixed versions with rear connection.

Long terminal shields

They are used for front connection with cables or insulated bars.
They comprise two parts assembled with captive screws, forming an IP40 cover.
- The top part is equipped with sliding grids with break marks for precise adaptation to cables or insulated bars.
- The rear part completely blocks off the connection zone. Partially cut squares can be removed to adapt to all types of connection for cables with lugs or copper bars.

Long terminal shields may be mounted upstream and downstream of:
- fixed devices
- the base of plug-in and withdrawable versions, thus completing the insulation provided by the mandatory short terminal shields on the device
- the one-piece spreader for NSX100 to 250
- the 52.5 mm spreaders for NSX400/630.

Terminal shields and pitch

Combination possibilities are shown below.

Circuit breaker	NSX100/160/250	NSX400/630	
Short terminal shields			
Pitch (mm)	35	45	
Long terminal shields			
Pitch (mm)	35	45	52.5

DB111356.eps

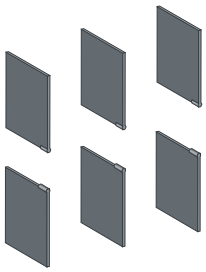

Interphase barriers.

Interphase barriers

Safety accessories for maximum insulation at the power-connection points:
- they clip easily onto the circuit breaker
- single version for fixed devices and adapters on plug-in bases
- not compatible with terminal shields
- the adapter for the plug-in base is required for mounting on plug-in and withdrawable versions.

DB111357.eps

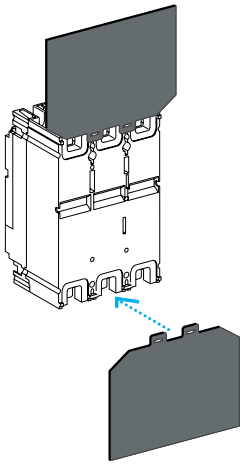

Rear insulating screens.

Rear insulating screens

Safety accessories providing insulation at the rear of the device.
Their use is mandatory for devices with spreaders, installed on backplates, when terminal shields are not used.
The available screen dimensions are shown below.

Circuit breaker		NSX100/160/250	NSX400/630
3P	W x H x thickness (mm)	140 x 105 x 1	203 x 175 x 1.5
4P	W x H x thickness (mm)	175 x 105 x 1	275 x 175 x 1.5

Accessories and auxiliaries
Selection of auxiliaries for Compact NSX100/160/250

Standard
All Compact NSX100/160/250 circuit breakers and switch-disconnectors have slots for the electrical auxiliaries listed below.
5 indication contacts (see page A-94)
- 2 ON/OFF (OF1 and OF2)
- 1 trip indication (SD)
- 1 fault-trip indication (SDE)
- 1 earth-fault indication (SDV), when the device is equipped with a Vigi module.

1 remote-tripping release (see page A-97)
- either 1 MN undervoltage release
- or 1 MX shunt release.

Remote indications
Circuit breakers equipped with Micrologic trip units may be equipped with a fault-trip indication to identify the type of fault by installing:
1 indication module with two outputs (see page A-95)
- either an SDx module with Micrologic 2.2 / 5.2 A or E / 6.2 A or E
- or an SDTAM module with Micrologic 2.2 M or 6-2 E-M (motor protection).

This module occupies the slots of one OF contact and an MN/MX release.

All these auxiliaries may be installed with a motor mechanism or a rotary handle or a toggle handle.
The following table indicates auxiliary possibilities depending on the type of trip unit.

NA, TMD, TMG, MA

Standard

DB403040.eps

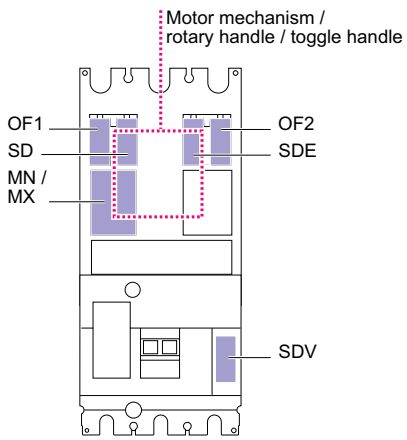

DB111392.eps

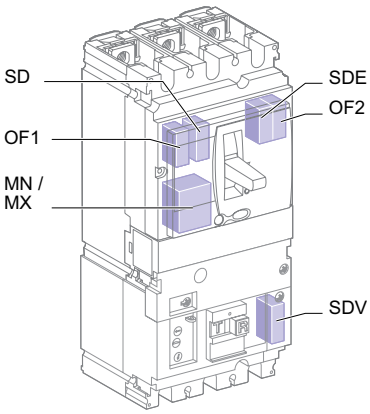

Micrologic 2 / 5 / 6

Standard

DB403041.eps

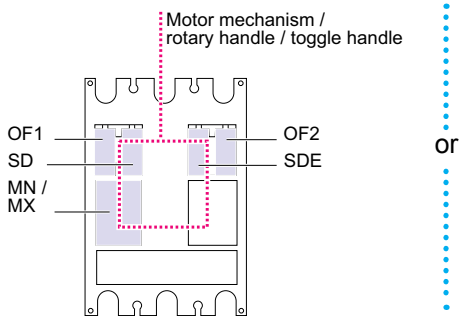

or

Remote indications via SDx or SDTAM

DB403042.eps

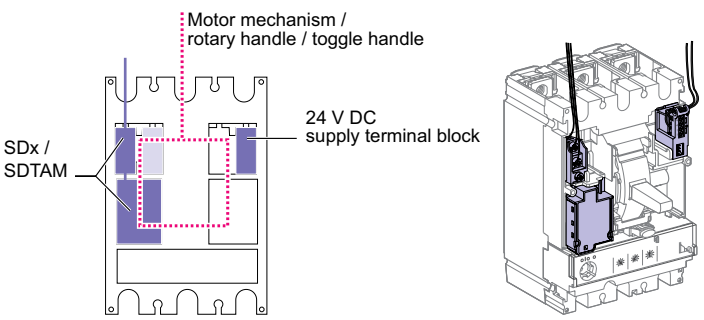

The SDx or SDTAM uses the OF1 and MN/MX slots.
External connection is made via a terminal block in the OF1 slot.
The 24 V DC supply provides for the Micrologic 5 / 6 display when the device is OFF or under low-load conditions.

Communication

Communication requires specific auxiliaries (see page A-40).

Communication of status indications

■ 1 BSCM module.

■ 1 NSX cord (internal terminal block) for both communication and 24 V DC supply to the BSCM.

Communication of status conditions is compatible with a toggle handle and a rotary handle.

Communication of status indications and controls

This requires, in addition to the previous auxiliaries:

■ 1 communicating motor mechanism connected to the BSCM.

Communication of measurements

Available on Micrologic 5 / 6, the system consists of:

■ 1 NSX cord (internal terminal block) for both communication and 24 V DC supply to the Micrologic.

Communication of measurements is compatible with a standard or communicating motor mechanism and a rotary handle.

Communication of status indications, controls and measurements

Available on Micrologic 5 / 6, the system consists of:

■ 1 BSCM module

■ 1 NSX cord (internal terminal block) for both communication and 24 V DC supply to the BSCM and the Micrologic

■ 1 communicating motor mechanism connected to the BSCM.

Installation of SDx or SDTAM is compatible with communication.

The following table indicates auxiliary possibilities depending on the type of trip unit.

NA, TMD, TMG, MA, Micrologic 2

Communication of status indications

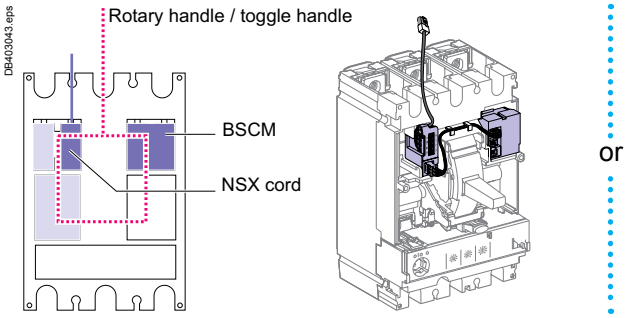

Communication of status indications and controls

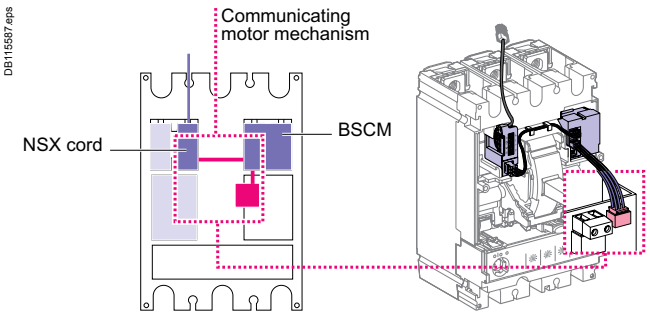

Micrologic 5 / 6

Communication of measurements with or without FDM121 display

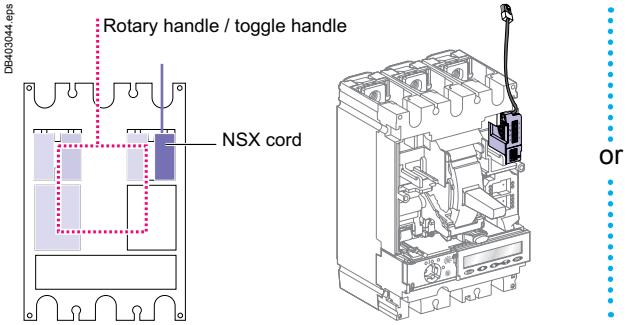

Communication of status indications, controls and measurements with or without FDM121 display

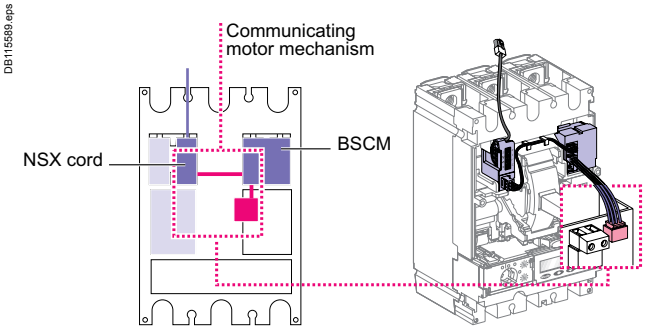

Accessories and auxiliaries
Selection of auxiliaries for Compact NSX400/630

Standard
All Compact NSX400/630 circuit breakers and switch-disconnectors have slots for the electrical auxiliaries listed below.
7 indication contacts (see page A-94)
- 4 ON/OFF (OF1, OF2, OF3, OF4)
- 1 trip indication (SD)
- 1 fault-trip indication (SDE)
- 1 earth-fault indication (SDV), when the device is equipped with a Vigi module.

1 remote-tripping release (see page A-97)
- either 1 MN undervoltage release
- or 1 MX shunt release.

Remote indications
Circuit breakers equipped with Micrologic trip units may be equipped with a fault-trip indication to identify the type of fault by installing:
1 indication module with two outputs (see page A-95)
- either an SDx module with Micrologic 2.2 / 5.2 A or E / 6.2 A or E
- or an SDTAM module with Micrologic 2.2 M or 6-2 E-M (motor protection).

This module occupies the slots of an MN/MX release.

All these auxiliaries may be installed with a motor mechanism or a rotary handle or a toggle handle.
The following table indicates auxiliary possibilities depending on the type of trip unit.

NA, Micrologic 1.3 M
Standard

DB403045.eps

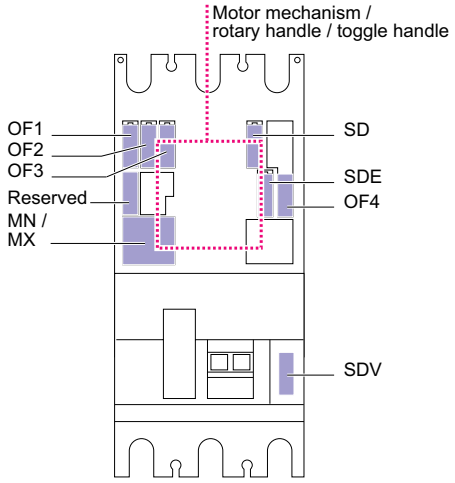

DB115591.eps

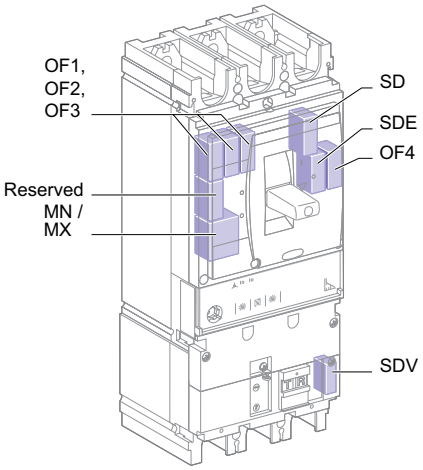

Micrologic 2 / 5 / 6
Standard

DB403046.eps

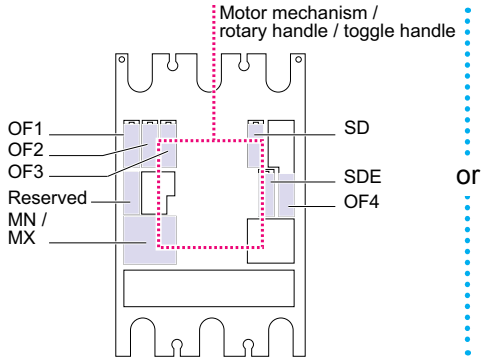

DB403047.eps

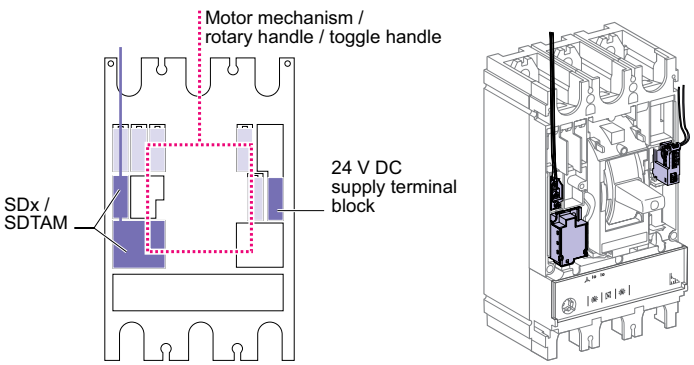

The SDx or SDTAM uses the reserved slot and the MN/MX slots.
External connection is made via a terminal block in the reserved slot.
The 24 V DC supply provides for the Micrologic 5 / 6 display when the device is OFF or under low-load conditions.

Communication

Communication requires specific auxiliaries (see page A-40).

Communication of status indications

- 1 BSCM module
- 1 NSX cord (internal terminal block) for both communication and 24 V DC supply to the BSCM.

Communication of status conditions is compatible with a toggle handle and a rotary handle.

Communication of status indications and controls

This requires, in addition to the previous auxiliaries:

- 1 communicating motor mechanism connected to the BSCM.

Communication of measurements

Available on Micrologic 5 / 6, the system consists of:

- 1 NSX cord (internal terminal block) for both communication and 24 V DC supply to the Micrologic.

Communication of measurements is compatible with a standard or communicating motor mechanism and a rotary handle.

Communication of status indications, controls and measurements

Available on Micrologic 5 / 6, the system consists of:

- 1 BSCM module
- 1 NSX cord (internal terminal block) for both communication and 24 V DC supply to the BSCM and the Micrologic
- 1 communicating motor mechanism connected to the BSCM.

Installation of SDx or SDTAM is compatible with communication.

The following table indicates auxiliary possibilities depending on the type of trip unit.

NA, Micrologic 1.3 M, Micrologic 2

Communication of status indications

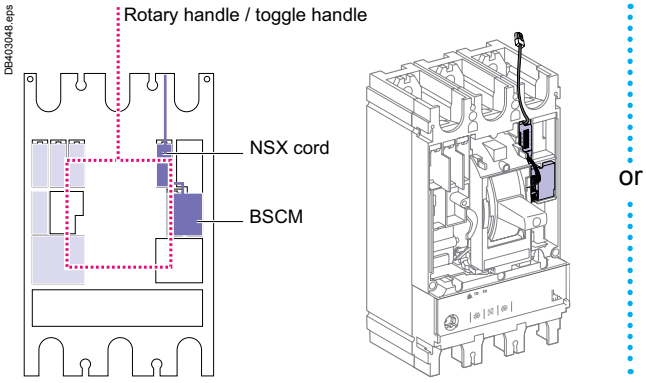

Communication of status indications and controls

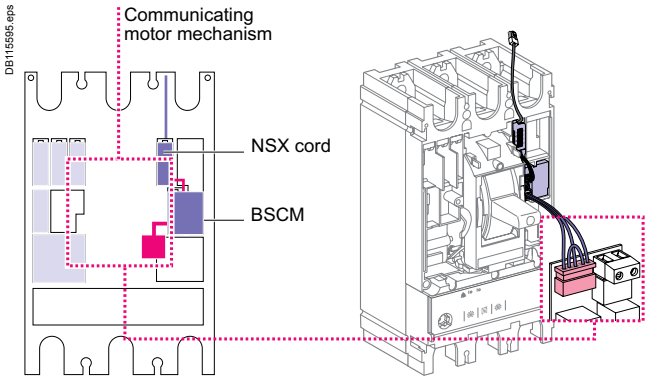

Micrologic 5 / 6

Communication of status indications

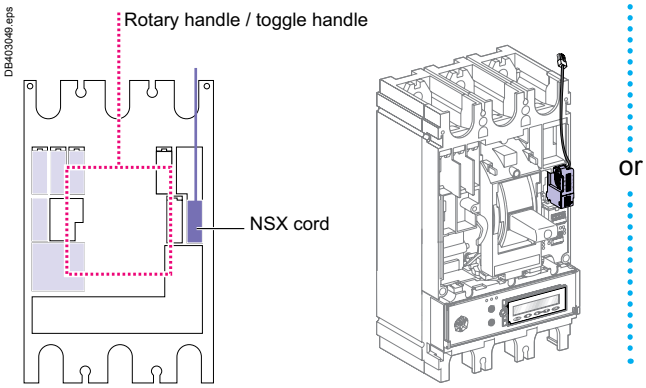

Communication of status indications, controls and measurements with or without FDM121 display

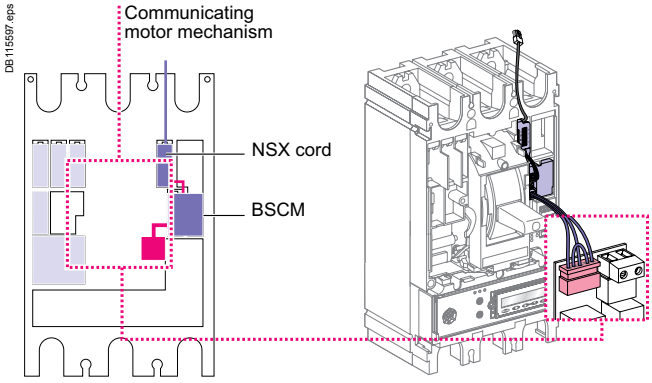

Accessories and auxiliaries
Connection of electrical auxiliaries

DB112162.EPS

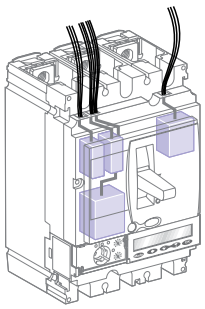

Fixed Compact NSX.

Fixed Compact NSX

Auxiliary circuits exit the device through a knock-out in the front cover.

DB112167.EPS

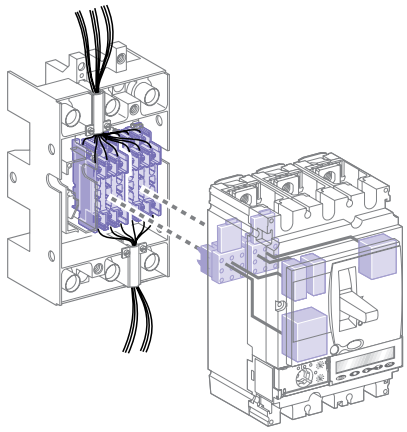

Plug-in/withdrawable Compact NSX.

Withdrawable or plug-in Compact NSX

Automatic auxiliary connectors

Auxiliary circuits exit the circuit breaker via one to three automatic auxiliary connectors (nine wires each). These are made up of:

- a moving part, connected to the circuit breaker via a support (one support per circuit breaker)
- a fixed part, mounted on the plug-in base, equipped with connectors for bare cables up to 2.5 mm².

Micrologic trip unit options are also wired via the automatic auxiliary connectors.

Selection of automatic auxiliary connectors

Depending on the functions installed, one to three automatic auxiliary connectors are required.

DB111376.EPS

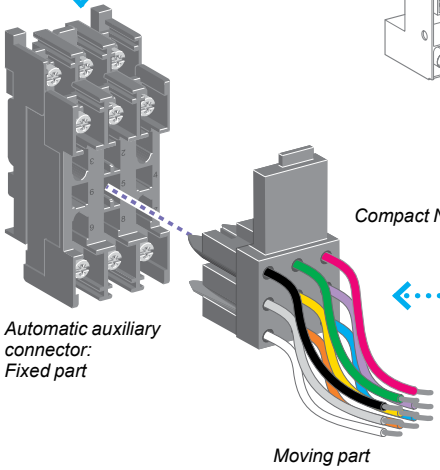

Automatic auxiliary connector: Fixed part

Moving part

DB115601.eps

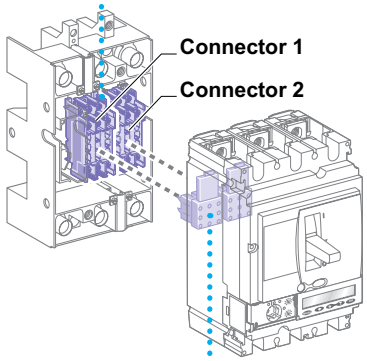

Compact NSX100/160/250

DB115610.eps

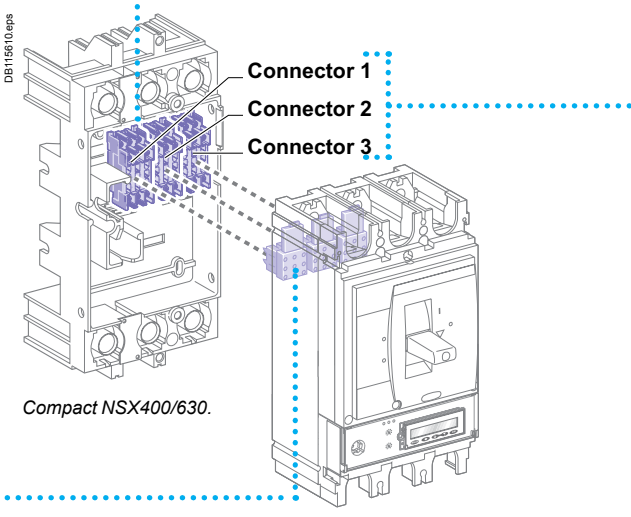

Compact NSX400/630.

Withdrawable Compact NSX

Manual auxiliary connectors

As an option to the automatic auxiliary connectors, withdrawable circuit breakers may be equipped with one to three plugs with nine wires each. In "disconnected" position, the auxiliaries remain connected.
They can then be tested by operating the device.

DB111379.EPS

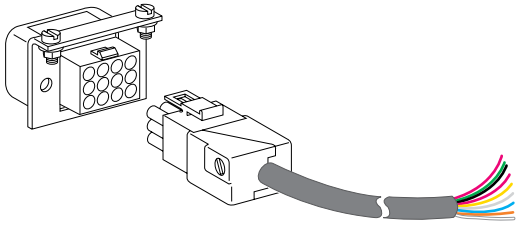

Nine-wire manual auxiliary connector.

DB115602.eps

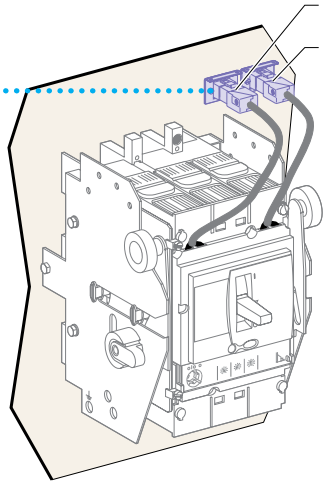

Compact NSX100/160/250.

DB115611.eps

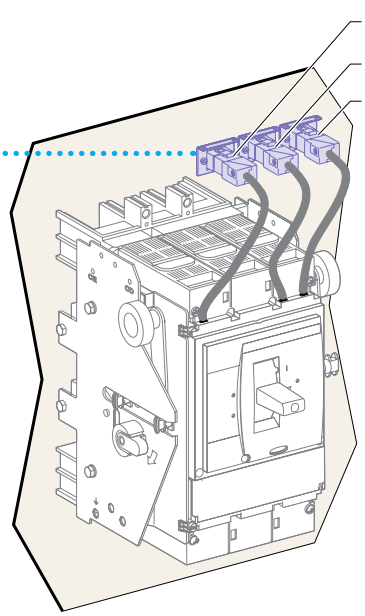

Compact NSX400/630.

Each auxiliary is equipped with a terminal block with numbered terminals for connection of wires up to:
- 1.5 mm² for auxiliary contacts and voltage releases
- 2.5 mm² for the motor-mechanism module.

Circuit breaker	Connector 1	Connector 2	Connector 3
	OF1 MN/ or SDx/ MX SDTAM SD	OF2/SDV / ZSI out (1) SDE NSX cord MT MTc 24 V DC	OF3 OF4 ZSI in ZSI out
NSX100/160/250	■	■	-
NSX400/630	■	■	■

(1) Only for NSX100 to 250.
***MT**: motor mechanism.*
***MTc**: communicating motor mechanism.*

Accessories and auxiliaries
Indication contacts

One contact model provides circuit-breaker status indications (OF - SD - SDE - SDV).
An early-make or early-break contact, in conjunction with a rotary handle, can be used to anticipate device opening or closing.
A CE / CD contact indicates that the chassis is connected / disconnected.

DB125549.eps



Indication contacts.

PB103706-68.eps



CE/CD carriage switches.

These common-point changeover contacts provide remote circuit-breaker status information.
They can be used for indications, electrical locking, relaying, etc.
They comply with the IEC 60947-5 international recommendation.

Functions

Breaker-status indications, during normal operation or after a fault
A single type of contact provides all the different indication functions:
■ OF (ON/OFF) indicates the position of the circuit breaker contacts
■ SD (trip indication) indicates that the circuit breaker has tripped due to:
□ an overload
□ a short-circuit
□ an earth fault (Vigi) or a ground fault (Micrologic 6)
□ operation of a voltage release
□ operation of the "push to trip" button
□ disconnection when the device is ON.
The SD contact returns to de-energised state when the circuit breaker is reset.
■ SDE (fault-trip indication) indicates that the circuit breaker has tripped due to:
□ an overload
□ a short-circuit
□ an earth fault (Vigi) or a ground fault (Micrologic 6).
The SD contact returns to de-energised state when the circuit breaker is reset.
■ SDV indicates that the circuit breaker has tripped due to an earth fault. It returns to de-energised state when the Vigi module is reset.
All the above auxiliary contacts are also available in "low-level" versions capable of switching very low loads (e.g. for the control of PLCs or electronic circuits).

Rotary-handle position contact for early-make or early-break functions
■ CAM (early-make or early-break function) contacts indicate the position of the rotary handle.
They are used in particular for advanced opening of safety trip devices (early break) or to energise a control device prior to circuit-breaker closing (early make).

Chassis-position contacts
■ CE/CD (connected/disconnected) contacts are microswitch-type carriage switches for withdrawable circuit breakers.

Installation

■ OF, SD, SDE and SDV functions: a single type of contact provides all these different indication functions, depending on where it is inserted in the device. The contacts clip into slots behind the front cover of the circuit breaker (or the Vigi module for the SDV function).
The SDE function on a Compact NSX100 - 250 A equipped with a magnetic, thermal-magnetic or Micrologic 2 trip unit requires the SDE actuator.
■ CAM function: the contact fits into the rotary-handle unit (direct or extended).
■ CE/CD function: the contacts clip into the fixed part of the chassis.

Electrical characteristics of auxiliary contacts

Contacts			Standard				Low level			
Types of contacts			**All**				**OF, SD, SDE, SDV**			
Rated thermal current (A)			6				5			
Minimum load			100 mA at 24 V DC				1 mA at 4 V DC			
Utilisation cat. (IEC 60947-5-1)			AC12	AC15	DC12	DC14	AC12	AC15	DC12	DC14
Operational current (A)	24 V	AC/DC	6	6	6	1	5	3	5	1
	48 V	AC/DC	6	6	2.5	0.2	5	3	2.5	0.2
	110 V	AC/DC	6	5	0.6	0.05	5	2.5	0.6	0.05
	220/240 V	AC	6	4	-	-	5	2	-	-
	250 V	DC	-	-	0.3	0.03	5	-	0.3	0.03
	380/440 V	AC	6	2	-	-	5	1.5	-	-
	480 V	AC	6	1.5	-	-	5	1	-	-
	660/690 V	AC	6	0.1	-	-	-	-	-	-

SDx and SDTAM are relay modules with two static outputs. They send different signals depending on the type of fault. They may not be used together.

PB103377-20.eps



SDx relay module with its terminal block.

PB103376-20.eps



SDTAM relay module with its terminal block.

SDx module

The SDx module remotes the trip or alarm conditions of Compact NSX circuit breakers equipped with electronic protection.
The SD2 output, available on all Micrologic trip units, corresponds to the overload-trip indication.
The SD4 output, available on Micrologic 5 / 6, is assigned to:
- overload pre-alarm (Micrologic 5)
- ground-fault trip indication (Micrologic 6).

These two outputs automatically reset when the device is closed (turned ON).
For Micrologic 5 / 6, the SD2 and SD4 outputs can be reprogrammed to be assigned to other types of tripping or alarm.

Output characteristics
It is possible to assign a function:
- latching with a time delay. Return to the initial state occurs at the end of the time delay
- permanent latching. In this case, return to the initial state takes place via the communication function.

Static outputs: 24 to 415 V AC / V DC; 80 mA max.

SDTAM module

The SDTAM module is specifically for the motor-protection Micrologic trip units 2.2 M, 2.3 M and 6.2 E-M, 6.3 E-M.
The SDTAM module, linked to the contactor controller, opens the contactor when an overload or other motor fault occurs, thus avoiding opening of the circuit breaker.

Micrologic 2 M
The SD4 output opens the contactor 400 ms before normal circuit-breaker opening in the following cases:
- overload (long-time protection for the trip class)
- phase unbalance or phase loss.

The SD2 output serves to memorise contactor opening by SDTAM.

Micrologic 6 E-M
The SD4 output opens the contactor 400 ms before normal circuit-breaker opening in the following cases:
- overload (long-time protection for the trip class)
- phase unbalance or phase loss
- locked rotor
- underload (undercurrent protection)
- long start.

The SD2 output serves to memorise contactor opening by SDTAM.

Output characteristics
Output reset can be:
- manual by a pushbutton included in the wiring diagram
- automatic after an adjustable time delay (1 to 15 minutes) to take into account the motor-cooling time.

Static outputs: 24 to 415 V AC / V DC; 80 mA max.

DB115603.eps

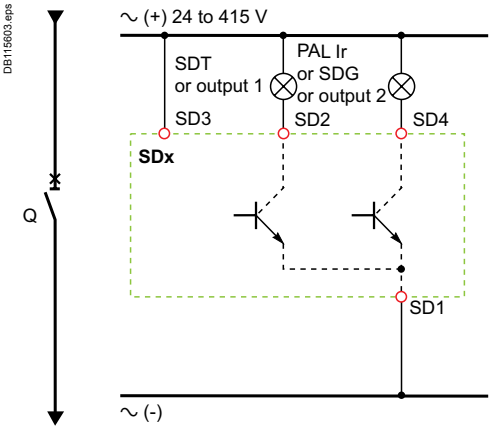

SDx wiring diagram.

DB414824.eps

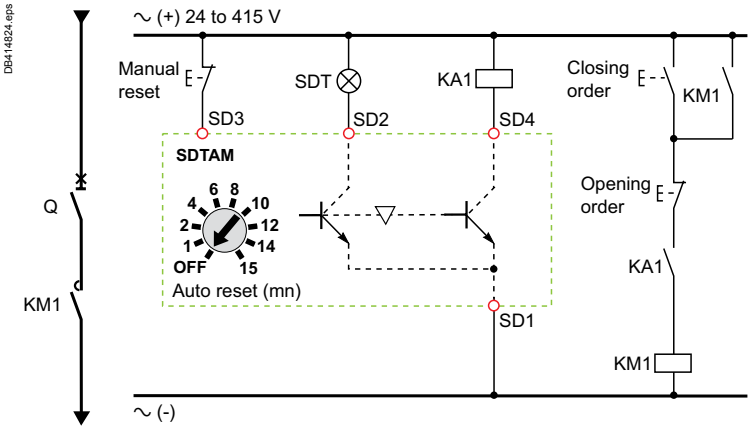

SDTAM wiring diagram with contactor control.

Accessories and auxiliaries
Motor mechanism

PB108168.eps



Compact NSX250 with motor mechanism.

When equipped with a **motor-mechanism** module, Compact NSX circuit breakers feature very high mechanical endurance as well as easy and sure operation:
- all circuit-breaker indications and information remain visible and accessible, including trip-unit settings and indications
- suitability for isolation is maintained and padlocking remains possible
- double insulation of the front face.

A specific motor mechanism is required for operation via the communication function. This **communicating motor mechanism** must be connected to the BSCM module to receive the opening and closing orders. Operation is identical to that of a standard motor mechanism.

Applications
- Local motor-driven operation, centralised operation, automatic distribution control.
- Normal/standby source changeover or switching to a replacement source to ensure availability or optimise energy costs.
- Load shedding and reconnection.
- Synchrocoupling.

Operation
The type of operation is selected using the manual/auto mode selection switch (**7**). A transparent, lead-seal cover controls access to the switch.

Automatic

When the switch is in the "auto" position, the ON/OFF (I/O) buttons and the charging lever on the mechanism are locked.
- Circuit-breaker ON and OFF controlled by two impulse-type or maintained signals.
- Automatic spring charging following voluntary tripping (by MN or MX), with standard wiring.
- Mandatory manual reset following tripping due to an electrical fault.

Manual

When the switch is in the "manual" position, the ON/OFF (I/O) buttons may be used. A microswitch linked to the manual position can remote the information.
- Circuit-breaker ON and OFF controlled by 2 pushbuttons I/O.
- Recharging of stored-energy system by pumping the lever 8 times.
- Padlocking in OFF position.

DB111335R.eps

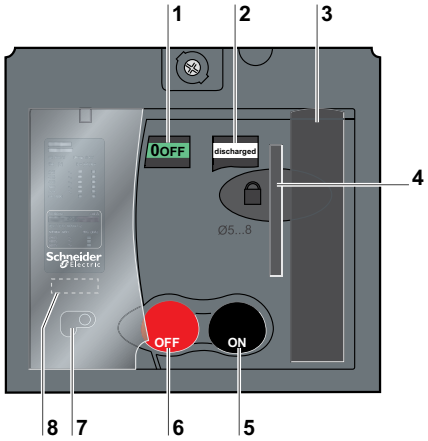

1 *Position indicator (positive contact indication)*
2 *Spring status indicator (charged, discharged)*
3 *Manual spring-charging lever*
4 *Keylock device (optional)*
Locking device (OFF position), using 1 to 3 padlocks, shackle diameter 5 to 8 mm, not supplied
5 *I (ON) pushbutton*
6 *O (OFF) pushbutton*
7 *Manual/auto mode selection switch. The position of this switch can be indicated remotely.*
8 *Operation counter (Compact NSX400/630)*

Installation and connections
All installation (fixed, plug-in/withdrawable) and connection possibilities are maintained.

Motor-mechanism module connections are made behind its front cover to integrated terminals, for cables up to 2.5 mm².

Optional accessories
- Keylock for locking in OFF position.
- Operations counter for the Compact NSX400/630, indicating the number of ON/OFF cycles. Must be installed on the front of the motor-mechanism module.

Characteristics

Motor mechanism			MT100 to MT630
Response time (ms)	opening		< 600
	closing		< 80
Operating frequency	cycles/minute max.		4
Control voltage (V)	DC		24/30 - 48/60 - 110/130 - 250
	AC 50/60 Hz		48 (50 Hz) - 110/130 - 220/240 - 380/440
Consumption (1)	DC (W)	opening	≤ 500
		closing	≤ 500
	AC (VA)	opening	≤ 500
		closing	≤ 500

(1) For NSX100 to NSX250, the inrush current is 2 In for 10 ms.

Electrical endurance

DB111336.eps

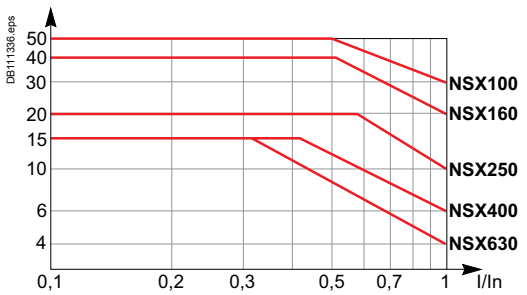

Circuit breaker + motor-mechanism module, in thousands of operations (IEC 60947 2), at 440 V.

Remote tripping



MX or MN voltage release.

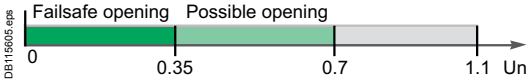

Opening conditions of the MN release.



Closing conditions of the MN release.



MN voltage release.

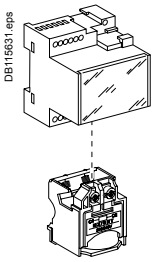

MN release with a time-delay unit.

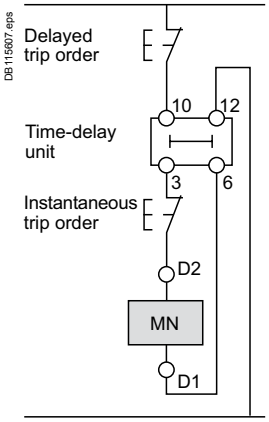

Wiring diagram for emergency-off function with MN + time-delay unit.

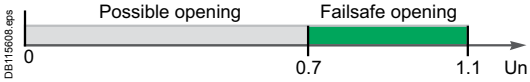

Opening conditions of the MX release.

***Note**: circuit breaker opening using an MN or MX release must be reserved for safety functions. This type of tripping increases wear on the opening mechanism. Repeated use reduces the mechanical endurance of the circuit breaker by 50 %.*

MX or MN voltage releases are used to trip the circuit breaker. They serve primarily for remote, emergency-off commands.
It is advised to test the system every six months.

MN undervoltage release

The MN release opens the circuit breaker when its supply voltage drops to a value below 35 % of its rated voltage Un.
Undervoltage tripping, combined with an emergency-off button, provides fail-safe tripping. The MN release is continuously supplied, i.e. if supply is interrupted:
- either voluntarily, by the emergency-off button,
- or accidentally, through loss of power or faulty wiring,

the release provokes opening of the circuit breaker.

Opening conditions

Circuit-breaker tripping by an MN release meets the requirements of standard IEC 60947-2.
- Automatic opening of the circuit breaker is ensured when the continuous voltage supply to the release U ⩽ 0.35 x Un.
- If the supply voltage is between 0.35 and 0.7 Un, opening is possible, but not guaranteed. Above 0.7 Un, opening does not take place.

Closing conditions

If there is no supply to the MN release, it is impossible to close the circuit breaker, either manually or electrically. Closing is ensured when the voltage supply to the release U ⩾ 0.85 x Un. Below this threshold, closing is not guaranteed.

Characteristics

Power supply	V AC	50/60 Hz: 24 - 48 - 100/130 - 200/240
		50 Hz: 380/415 60 Hz: 208/277
	V DC	12 - 24 - 30 - 48 - 60 - 125 -250
Operating threshold	Opening	0.35 to 0.7 Un
	Closing	0.85 Un
Operating range		0.85 to 1.1 Un
Consumption (VA or W)		Pick-up: 10 - Hold: 5
Response time (ms)		50

Time-delay unit for an MN release

A time delay unit for the MN release eliminates the risk of nuisance tripping due to a transient voltage dip lasting ⩽ 200 ms. For shorter micro-outages, a system of capacitors provides temporary supply to the MN at U > 0.7 to ensure non tripping.
The correspondence between MN releases and time-delay units is shown below.

Power supply	Corresponding MN release
Unit with fixed delay 200 ms	
48 V AC	48 V DC
220 / 240 V AC	250 V DC
Unit with adjustable delay ⩽ 200 ms	
48 - 60 V AC/DC	48 V DC
100 - 130 V AC/DC	125 V DC
220 - 250 V AC/DC	250 V DC

MX shunt release

The MX release opens the circuit breaker via an impulse-type (⩾ 20 ms) or maintained order.

Opening conditions

When the MX release is supplied, it automatically opens the circuit breaker. Opening is ensured for a voltage U ⩾ 0.7 x Un.

Characteristics

Power supply	V AC	50/60 Hz: 24 - 48 - 100/130 - 200/240
		50 Hz: 380/415 60 Hz: 208/277
	V DC	12 - 24 - 30 - 48 - 60 - 125 -250
Operating range		0.7 to 1.1 Un
Consumption (VA or W)		Pick-up: 10
Response time (ms)		50

Circuit breaker control by MN or MX

When the circuit breaker has been tripped by an MN or MX release, it must be reset before it can be reclosed.
MN or MX tripping takes priority over manual closing.
In the presence of a standing trip order, closing of the contacts, even temporary, is not possible.
Connection using wires up to 1.5 mm² to integrated terminal blocks.

Accessories and auxiliaries
Rotary handles

There are two types of rotary handle:
- direct rotary handle
- extended rotary handle.

There are two models:
- standard with a black handle
- red handle and yellow front for machine-tool control.

PB105116.eps



Compact NSX with a rotary handle.

PB103607-50.eps



Compact NSX with an MCC rotary handle.

PB103608-50.eps



Compact NSX with a CNOMO machine-tool rotary handle.

PB105117.eps



Compact NSX with an extended rotary handle installed at the back of a switchboard, with the keylock option and key.

Direct rotary handle

Standard handle

Degree of protection IP40, IK07.
The direct rotary handle maintains:
- visibility of and access to trip-unit settings
- suitability for isolation
- indication of the three positions O (OFF), I (ON) and tripped
- access to the "push to trip" button.

Device locking
The rotary handle facilitates circuit-breaker locking.
- Padlocking:
  - standard situation, in the OFF position, using 1 to 3 padlocks, shackle diameter 5 to 8 mm, not supplied
  - with a simple modification, in the ON and OFF positions. Locking in the ON position does not prevent free circuit-breaker tripping if a fault occurs. In this case, the handle remains the ON position after the circuit breaker tripping. Unlocking is required to go to the tripped then the OFF position.
- Keylock (and padlock)

It is possible to install a Ronis or Profalux keylock (optional) on the base of the handle to obtain the same functions as with a padlock.

Early-make or early-break contacts (optional)
Early-make and/or early-break contacts may be used with the rotary handle. It is thus possible to:
- supply an MN undervoltage release before the circuit breaker closes
- open the contactor control circuit before the circuit breaker opens.

MCC switchboard control

Control of an MCC switchboard is achieved by adding a kit to the standard handle. In addition to the standard functions, the kit offers the characteristics listed below.

Higher degree of protection IP
Degree of protection IP43, IK07.
The IP is increased by a built-in gasket.

Door locking depending on device position
- The door cannot be opened if the circuit breaker is ON or in the tripped position. For exceptional situations, door locking can be temporarily disabled with a tool to open the door when the circuit breaker is closed. This operation is not possible if the handle is locked by a padlock.
- Circuit-breaker closing is disabled if the door is open. This function can be deactivated.

Machine-tool control in compliance with CNOMO

Control of a machine-tool is achieved by adding a kit to the standard handle. In addition to the standard functions, the kit offers the characteristics listed below.

Enhanced waterproofness and mechanical protection
- Degree of protection IP54, IK08.
- Compliance with CNOMO E03.81.501N.

Extended rotary handle

Degree of protection IP55, IK08.
The extended rotary handle makes it possible to operate circuit breakers installed at the back of switchboards, from the switchboard front.
It maintains:
- visibility of and access to trip-unit settings
- suitability for isolation
- indication of the three positions O (OFF), I (ON) and tripped.

Mechanical door locking when device closed
A standard feature of the extended rotary handle is a locking function, built into the shaft, that disables door opening when the circuit breaker is in the ON or tripped positions.
Door locking can be temporarily disabled with a tool to open the door without opening the circuit breaker. This operation is not possible if the handle is locked by a padlock.

Voluntary disabling of mechanical door locking
A modification to the handle, that can be carried out on site, completely disables door locking, including when a padlock is installed on the handle. The modification is reversible.
When a number of extended rotary handles are installed on a door, this disabling function is the means to ensure door locking by a single device.

PB105127.eps



Extended rotary handle (cont.)

Device and door padlocking
Padlocking locks the circuit-breaker handle and disables door opening:
■ standard situation, in the OFF position, using 1 to 3 padlocks, shackle diameter 5 to 8 mm, not supplied
■ with a simple modification, in the ON and OFF positions. Locking in the ON position does not prevent free circuit-breaker tripping if a fault occurs.
In this case, the handle remains in the ON position after the circuit breaker tripping. Unlocking is required to go to the tripped then the OFF position.
If the door controls were modified to voluntarily disable door locking, padlocking does not lock the door, but does disable handle operation of the device.

Device locking using a keylock inside the switchboard
It is possible to install a Ronis or Profalux keylock (optional) on the base of the rotary handle to lock the device in the OFF position or in either the ON or OFF positions.

Accessory for device operation with the door open
When the device is equipped with an extended rotary handle, a control accessory mounted on the shaft makes it possible to operate the device with the door open.
■ The device can be padlocked in the OFF position.
■ The accessory complies with UL508.

Early-make or early-break contacts (optional)
The extended rotary handle offers the same possibilities with early-make and/or early-break contacts as the standard rotary handle.

Parts of the extended rotary handles
■ A unit that replaces the front cover of the circuit breaker (secured by screws).
■ An assembly (handle and front plate) on the door that is always secured in the same position, whether the circuit breaker is installed vertically or horizontally.
■ An extension shaft that must be adjusted to the distance. The min/max distance between the back of circuit breaker and door is:
□ 185…600 mm for Compact NSX100 to 250
□ 209…600 mm for Compact NSX400/630.
For withdrawable devices, the extended rotary handle is also available with a telescopic shaft to compensate for device disconnection. In this case, the min/max distances are:
□ 248…600 mm for Compact NSX100 to 250
□ 272...600 mm for Compact NSX400/630.

PB105118.eps



Manual source-changeover systems

An additional accessory interlocks two devices with rotary handles to create a source-changeover system. Closing of one device is possible only if the second is open.
This function is compatible with direct or extended rotary handles.
Up to three padlocks can be used to lock in the OFF or ON position.

Accessories and auxiliaries
Additional measurement and indication modules

PB103795-32.eps



Voltage-presence indicator.

Voltage-presence indicator

The indicator detects and indicates that circuit breaker terminals are supplied with power.

Installation

- Mounted in the long or short terminal shields, via the knockouts.
- May be positioned upstream or downstream of the circuit breaker.
- Degree of protection IP40, IK04.
- Not compatible with the motor-mechanism module.

Electrical characteristics

Operates on all networks with voltages ranging from 220 to 550 V AC.

Current-transformer module

This module enables direct connection of a measurement device such as an ammeter or a power meter.

Installation

- The module is installed directly on the downstream circuit-breaker terminals.
- Degree of protection IP40, IK04.
- Class II insulation between front and the power circuits.
- Connection to 6 integrated connectors for cables up to 2.5 mm².

Electrical characteristics

- Current transformer with 5 A secondary winding.
- Class 3 for the following output-power consumptions:

Accuracy:

- 100 A rating: 1.6 VA
- 150 A rating: 3 VA
- 250 A rating: 5 VA
- 400/600 A rating: 8 VA.

PB105123.eps



Compact NSX with current-transformer module.

Current-transformer module with voltage measurement outputs

This module enables direct connection of a digital measurement device such as a Power Meter PM700, PM800, etc. (not supplied).

Installation

- The module is installed directly on the downstream circuit-breaker terminals.
- Degree of protection IP40, IK04.
- Class II insulation between front and the power circuits.
- Built-in connectors for cables from 1.5 to 2.5 mm².

Electrical characteristics

- Rated operational voltage Ue: 530 V
- Frequencies of measured values: 50...60 Hz
- Three CTs with 5 A secondary windings for the rated primary current In :
- class 0.5 to 1 for rated power consumption values at the output:
  - 125 A, 150 A and 250 A ratings: class 1 for 1.1 VA
  - 400/600 A rating: class 0.5 for 2 VA
- Connection using a 2.5 mm2 cable up to 2.5 m long.
- Four voltage measurement outputs including protection with automatic reset.
- voltage measurement output impedance 3500 Ω ±25 %, maximum current 1 mA
- The voltage measurement outputs are intended only for measurements (1 mA max.) and may not be used to supply the display.

PB105124.eps



Compact NSX with ammeter module.

Ammeter and Imax ammeter modules

Ammeter module

Measures and displays (dial-type ammeter) the current of each phase (selection of phases by 3-position switch in front).

Imax ammeter module

Measures and displays (dial-type ammeter) the maximum current flowing in the middle phase. The Imax value can be reset on the front.

Installation

- Identical for both types of ammeter module.
- The module is installed directly on the downstream circuit-breaker terminals.
- The ammeter clips into the module in any of four 90° positions, i.e. it can be installed of devices mounted both vertically and horizontally.
- Degree of protection IP40, IK04.
- Class II insulation between front and the power circuits.

Electrical characteristics

- Ammeter module: accuracy class 4.5.
- Imax ammeter module: accuracy ±6 %.
- Maximum currents are displayed only if they last ⩾ 15 minutes.

PB105125.eps



Insulation monitoring module.

Insulation monitoring module

This module detects and indicates an insulation drop on a load circuit (TN-S or TT systems).
Operation is identical to that of a Vigi module, but without circuit-breaker tripping.
Indication by a red LED in front.
An auxiliary contact may be installed for remote insulation-drop indications.
When insulation drops below a minimum, user-set threshold, the LED goes on and the auxiliary contact switches. The fault indication cannot be cancelled except by pressing the manual reset button.

Installation

- The module is installed directly on the downstream circuit-breaker terminals.
- Degree of protection IP40, IK04.
- Double insulation of the front face.

Electrical characteristics

- Settings: 100 - 200 - 500 - 1000 mA.
- Accuracy: -50 +0 %.
- Time delay following insulation drop: 5 to 10 seconds.
- AC-system voltage: 200 to 440 V AC.

Accessories and auxiliaries
Locks

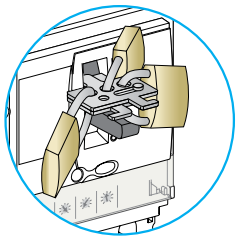
DB111364.eps

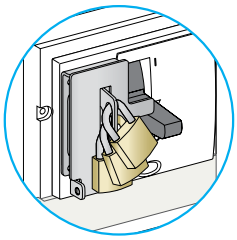
DB111365.eps

Toggle locking using padlocks and an accessory:
Removable device *Fixed device attached to the case (3).*

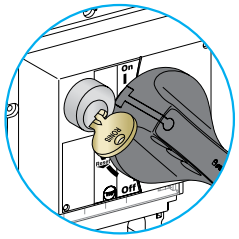
DB111363.eps

Rotary-handle locking using a keylock.

Locking in the OFF position guarantees isolation as per IEC 60947-2. Padlocking systems can receive up to three padlocks with shackle diameters ranging from 5 to 8 mm (padlocks not supplied). Certain locking systems require an additional accessory.

Control device		Function	Means	Required accessories
Toggle		Lock in OFF position	Padlock	Removable device
		Lock in OFF or ON position	Padlock	Fixed device
Direct rotary handle	Standard	Lock in ■ OFF position ■ OFF or ON position (1)	Padlock	-
			Keylock	Locking device + keylock
	MCC	Lock in ■ OFF position ■ OFF or ON position (1)	Padlock	-
	CNOMO	Lock in ■ OFF position ■ OFF or ON position (1)	Padlock	-
Extended rotary handle		Lock in ■ OFF position ■ OFF or ON position (1) with door opening prevented (2)	Padlock	-
		Lock in OFF position	Padlock	UL508 control accessory
		■ OFF or ON position (1) inside the switchboard	Keylock	Locking device + keylock
Motor mechanism		Lock in OFF position remote operation disabled	Padlock	-
			Keylock	Locking device + keylock
Withdrawable circuit breaker		Lock in ■ disconnected position	Padlock	-
			Keylock	Locking device + keylock
		■ connected position	Keylock	Locking device + keylock

(1) Following a simple modification of the mechanism.
(2) Unless door locking has been voluntarily disabled.
(3) Only for 3P-4P.

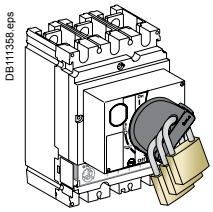
DB111358.eps

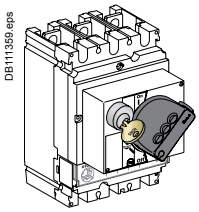
DB111359.eps

Rotary-handle locking using a padlock or a keylock.

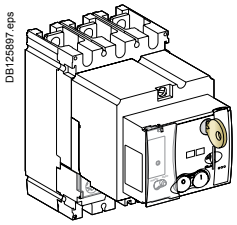
DB125897.eps

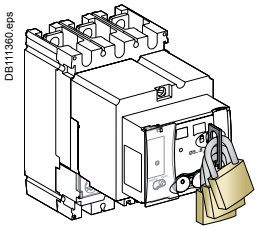
DB111360.eps

Motor-mechanism locking using a padlock or a keylock.

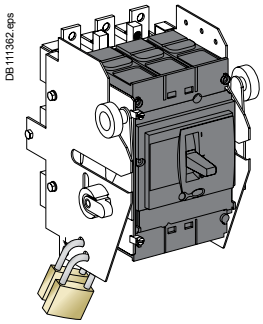
DB111362.eps

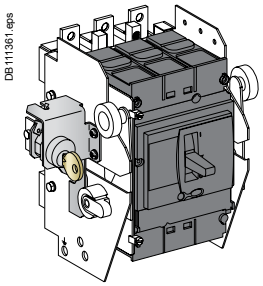
DB111361.eps

Chassis locking in the connected position.

Sealing accessories

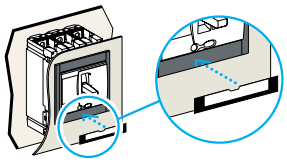

Identification accessories.

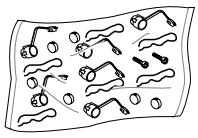

Sealing accessories.

Outgoing-circuit identification

Compact NSX100 to 630 can be equipped with label holders supplied in sets of ten (cat. no. LV429226).
They are compatible with escutcheons.

Sealing accessories

Sealing accessories are available. Each bag of accessories contains all the parts required for the types of sealing indicated below.
A bag contains:
- 6 sealing accessories
- 6 lead seals
- 0.5 m of wire
- 2 screws.

Types of seals and corresponding functions

Toggle control	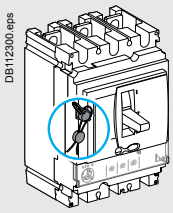	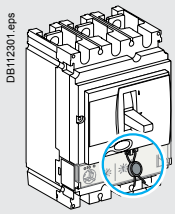		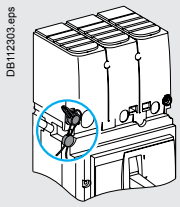
Rotary handle	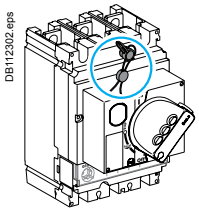	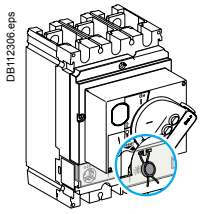		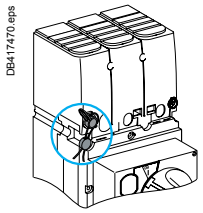
Motor mechanism	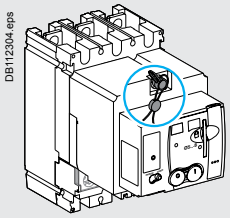	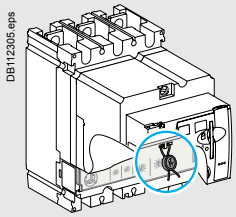	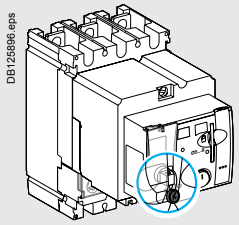	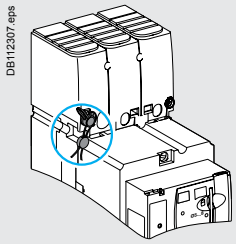
Types of seals **Protected operations**	**Front-cover fixing screw** ■ front removal ■ access to auxiliaries ■ trip-unit removal.	**Trip-unit transparent cover** ■ modification of settings ■ access to test connector.	**Motor-mechanism transparent cover** ■ access to manual/auto mode selection switch: depending on its position, manual (1) or automatic operation is not possible. *(1) In this case, local operation is not possible.*	**Terminal-shield fixing screw** ■ access to power connections (protection against direct contact).
Access to Vigi-module settings	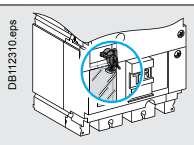	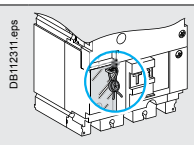		
Types of seals **Protected operations**	**Vigi-module fixing device** ■ removal of the Vigi module.	**Protection cover for settings** ■ modification of settings.		

Accessories and auxiliaries
Individual enclosures

PB103593-40.eps



IP55 metal enclosure.

PB105120.eps



IP55 insulating enclosure.

Individual enclosures are available for Compact/Vigicompact NSX devices with two, three or four poles.
All fixed, front connections are possible, except right-angle, 45°, double-L and edgewise terminal extensions.
All spreaders may be installed in the enclosures intended for Compact/Vigicompact NSX250 to 630 devices, except the 70 mm spreaders for NSX400/630.

Two models of enclosures

■ IP55 metal individual enclosure, with:
□ metal enclosure
□ door with keylock and cut-out for rotary handle
□ extended rotary handle, IP56, IK08, black or red/yellow
□ device mounting plate
□ removable plate (without holes) for cable entry through bottom.
■ IP55 insulating individual enclosure, with:
□ polyester insulating enclosure
□ transparent cover, screwed, neoprene gasket, with cut-out for extended rotary handle
□ extended rotary handle, IP56, IK08, black or red/yellow
□ device mounting plate
□ 2 removable plates (without holes) for cable entry through bottom and/or top.

Dimensions (H x W x D in mm)

■ Metal enclosures:	
□ Compact NSX100/160	450 x 350 x 250
□ Compact NSX250 and Vigicompact NSX100 to 250	650 x 350 x 250
□ Compact NSX400	650 x 350 x 250
□ Compact NSX630 and Vigicompact NSX400/630	850 x 350 x 250
■ Insulating enclosures:	
□ Compact NSX100/160	360 x 270 x 235
□ Compact NSX250 and Vigicompact NSX100/160	540 x 270 x 235
□ Compact NSX400/630	720 x 360 x 235
□ Vigicompact NSX250/630	720 x 360 x 235

DB115609.eps

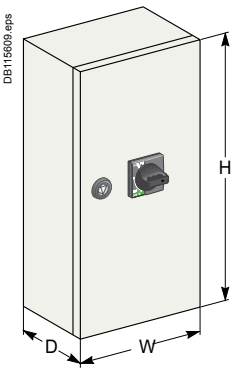

Escutcheons are an optional feature mounted on the switchboard door. They increase the degree of protection to IP40, IK07. Protection collars maintain the degree of protection, whatever the position of the device (connected, disconnected).

IP30 or IP40 escutcheons for fixed devices

IP30

The three types are glued to the cut-out in the front door of the switchboard:
- ■ escutcheon for all control types (toggle, rotary handle or motor mechanism)
  - □ without access to the trip unit
  - □ with access to the trip unit
- ■ for Vigi modules, can be combined with the above.

IP40

The four types, with a gasket, are screwed to the door cut-out:
- ■ three escutcheons identical to the previous, but IP40
- ■ a wide model for Vigi and ammeter modules that can be combined with the above.

PB105119.eps



IP30 escutcheon.

PB105126.eps



IP30 escutcheon with access to the trip unit.

DB112290.eps

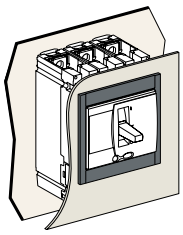

DB112291.eps

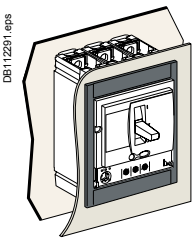

Escutcheon for toggle without and with access to the trip unit.

DB112292.eps

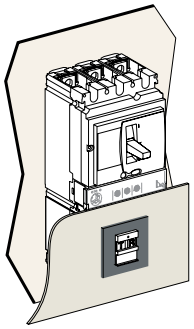

Escutcheon for Vigi module.

DB112293.eps

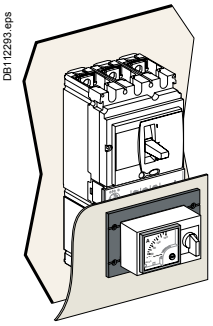

Wide escutcheon for ammeter.

Accessories and auxiliaries
Escutcheons and protection collars

PB103777-36.eps



Escutcheon with collar for toggle.

PB103780-36.eps



Escutcheon for Vigi module.

IP40 escutcheons for withdrawable devices

IP40 for withdrawable devices

The two types, with a gasket, are screwed to the door cut-out:
- for rotary handle or motor mechanism: standard IP40 escutcheon
- for toggle with extension: standard escutcheon + collar for withdrawal.

DB112294

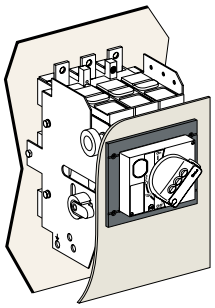

Standard escutcheon with rotary handle.

DB112295

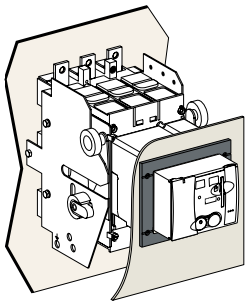

Standard escutcheon for motor mechanism.

DB112296

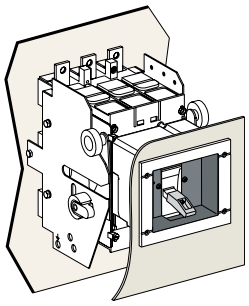

Standard escutcheon with collar for withdrawal, for toggle.

IP40 for Vigi module on withdrawable devices

The two types, with a gasket, are screwed to the door cut-out:
- for rotary handle or motor mechanism: standard IP40 escutcheon
- for toggle: standard escutcheon + collar for withdrawal.

DB112297.eps

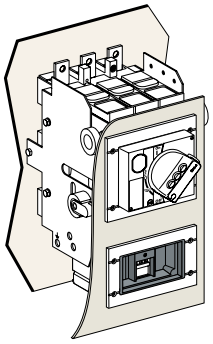

DB112298.eps

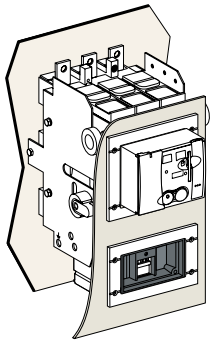

DB112299.eps

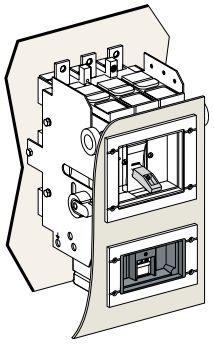

Escutcheon for Vigi module, with escutcheons for the three types of control.

PB103775-40.eps



Toggle cover.

IP43 toggle cover

Available only for devices with toggles. Fits over toggle and front cover of the device.
- Mounted on the front of the circuit breaker.
- Degree of protection IP43, IK07.

DB112218.eps



Toggle cover.

PB103820_35.eps



NS retrofit front cover.

Retrofit front covers

These replacement front covers make it possible to install NSX devices in existing switchboards containing NS devices by installing the NS-type retrofit covers on the NSX devices.
- NS100 to 250 cover.
- NS400/630 cover.

Operating safety



Installation recommendations
Contents

Presentation 2
Functions and characteristics A-1

Operating conditions **B-2**

Installation in switchboards
Power supply and weights B-3
Safety clearances and minimum distances B-4
Installation example B-5

Control wiring **B-6**

Temperature derating
Compact NSX100 to 250 equipped with
thermal-magnetic trip units B-8
Compact NSX equipped with electronic trip units B-9

Power loss/ Resistance
Compact NSX equipped with thermal-magnetic trip units B-10
Compact NSX equipped with electronic trip units B-11

Dimensions and connection C-1
Wiring diagrams D-1
Additional characteristics E-1
Glossary G-1

Operating conditions

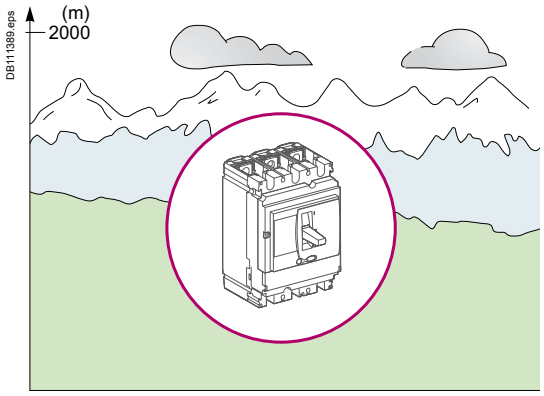

DB111389.eps

Altitude derating

Altitude does not significantly affect the characteristics of Compact NSX circuit breakers up to 2000 m. Above this altitude, it is necessary to take into account the decrease in the dielectric strength and cooling capacity of air.
The following table gives the corrections to be applied for altitudes above 2000 metres.
The breaking capacities remain unchanged.

Compact NSX100 to 630

Altitude (m)		2000	3000	4000	5000
Dielectric withstand voltage (V)		3000	2500	2100	1800
Insulation voltage (V)	Ui	800	700	600	500
Maximum operational voltage (V)	Ue	690	590	520	460
Average thermal current (A) at 40 °C	In x	1	0.96	0.93	0.9

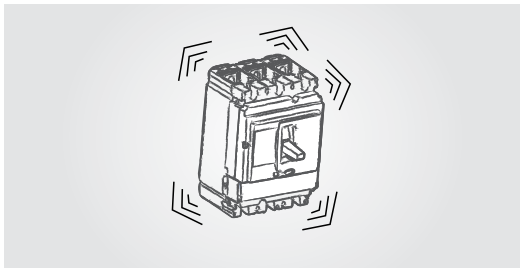
DB111390.eps

Vibrations

Compact NSX devices resist electromagnetic or mechanical vibrations.
Tests are carried out in compliance with standard IEC 60068-2-6 for the levels required by merchant-marine inspection organisations (Veritas, Lloyd's, etc.):
- 2 to 13.2 Hz: amplitude ±1 mm
- 13.2 to 100 Hz: constant acceleration 0.7 g.

Excessive vibration may cause tripping, breaks in connections or damage to mechanical parts.

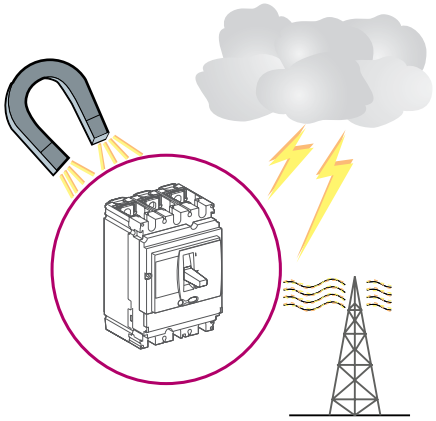
DB111391.eps

Degree of protection

Compact NSX circuit breakers have been tested for degree of protection (IP) mechanical impact protection (IK). See page A-3.

Electromagnetic disturbances

Compact NSX devices are protected against:
- overvoltages caused by circuit switching
- overvoltages caused by an atmospheric disturbances or by a distribution-system outage (e.g. failure of a lighting system)
- devices emitting radio waves (radios, walkie-talkies, radar, etc.)
- electrostatic discharges produced directly by users.

Compact NSX devices have successfully passed the electromagnetic-compatibility tests (EMC) defined by the following international standards. See page A-3.
These tests ensure that:
- no nuisance tripping occurs
- tripping times are respected.

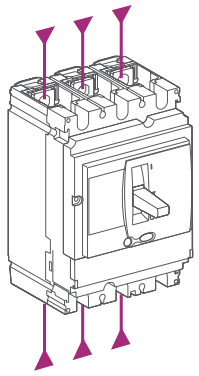

Power supply from the top or bottom (1)

Compact NSX circuit breakers can be supplied from either the top or the bottom, even when equipped with a Vigi earth-leakage protection module, without any reduction in performance. This capability facilitates connection when installed in a switchboard.
All connection and insulation accessories can be used on circuit breakers supplied either from the top or bottom.

(1) All R, HB1, and HB2 circuit breakers are restricted for use as line-load connection. They can not have power fed into the bottom of the circuit breaker. They will be marked with Line and Load markings. If reverse feeding is required the configuration has to be validated by testing.

Weight

The table below presents the weights (in kg) of the circuit breakers and the main accessories, which must be summed to obtain the total weight of complete configurations. The values are valid for all performance categories.

Type of device		Circuit breakers	Base	Chassis	Vigi module	Visu module	Motor mech.
NSX100	3P/2D	1.79	0.8	2.2	0.87	2	1.2
	3P/3D	2.05	0.8	2.2	0.87	2	1.2
	4P/4D	2.4	1.05	2.2	1.13	2.2	1.2
NSX160	3P/2D	1.85	0.8	2.2	0.87	2	1.2
	3P/3D	2.2	0.8	2.2	0.87	2	1.2
	4P/4D	2.58	1.05	2.2	1.13	2.2	1.2
NSX250	3P/2D	1.94	0.8	2.2	0.87	2	1.2
	3P/3D	2.4	0.8	2.2	0.87	2	1.2
	4P/4D	2.78	1.05	2.2	1.13	2.2	1.2
NSX400/630	3P/3D	6.19	2.4	2.2	2.8	4.6	2.8
	4P/4D	8.13	2.8	2.2	3	4.9	2.8

Installation in switchboards
Safety clearances and minimum distances

General rules

When installing a circuit breaker, minimum distances (safety clearances) must be maintained between the device and panels, bars and other protection devices installed nearby. These distances, which depend on the ultimate breaking capacity, are defined by tests carried out in accordance with standard IEC 60947-2.
If installation conformity is not checked by type tests, it is also necessary to:
- use insulated bars for circuit-breaker connections
- segregate the busbars using insulating screens.

For Compact NSX100 to 630 devices, terminal shields and interphase barriers are recommended and may be mandatory depending on the operating voltage of the device and type of installation (fixed, withdrawable, etc.).

Power connections

The table below indicates the rules to be respected for Compact NSX100 to 630 devices to ensure insulation of live parts for the various types of connection.
- fixed devices with front connection (FC) or rear connection (RC)
- plug-in or withdrawable devices.

Connection accessories such as crimp lugs, bare-cable connectors, terminal extensions (straight, right-angle, double-L and 45°) and spreaders are supplied with interphase barriers.
Long terminal shields provide a degree of protection of IP40 (ingress) and IK07 (mechanical impact).

Compact NSX100 to 630: rules to be respected to ensure insulation of live parts

Type of connection		**Fixed, front connection**			**Fixed, rear connection**	**Plug-in or withdrawable**	
		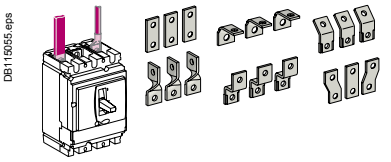			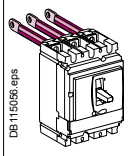	On backplate 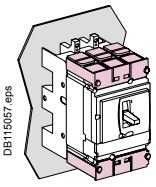	Through panel 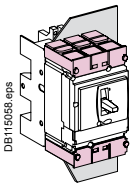
Possible, recommended or mandatory accessories: With:		No insulating accessory	Interphase barriers 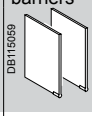	Long terminal shields 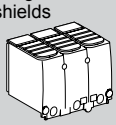	Short terminal shields 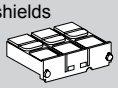	Short terminal shields 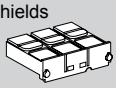	Short terminal shields 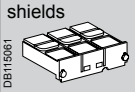
operating voltage	**type of conductor**						
< 500 V	Insulated bars 	Possible	Possible	Possible	Recommended	Recommended	Mandatory
	Extension terminals Cables + crimp lugs 	No	Mandatory (supplied)	Possible (instead of ph. barriers)	Recommended	Recommended	Mandatory
	Bare cables + connectors 	Possible for cable connectors NSX100 to 250	Possible for cable connectors NSX100 to 250	Possible for cable connectors NSX100 to 250	Recommended	Recommended	Mandatory
		No	Mandatory (1) (supplied)	Possible (1) (instead of ph. barriers)			
≥ 500 V	Insulated bars 	No	No	Mandatory (use of short terminal shield possible)	Mandatory (2)	Mandatory (2)	Mandatory (2)
	Extension terminals Cables + crimp lugs 	No	No	Mandatory	Mandatory (2)	Mandatory (2)	Mandatory (2)
	Bare cables + connectors 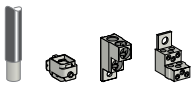	No	No	Mandatory	Mandatory (2)	Mandatory (2)	Mandatory (2)

(1) Long terminal shields, mandatory if the device is fixed through the door, whatever the voltage.
(2) LV433683 (3P) or LV433684 (4P) Short Terminal Shield are mandatory for R/HB1/HB2 400 A and 630 A performance.

Safety clearance

Minimum distance between two adjacent circuit breakers

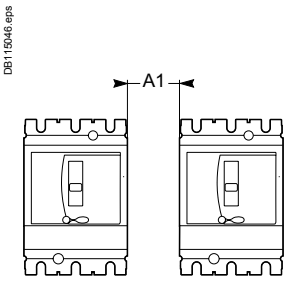

Minimum distance between circuit breaker and front or rear panels

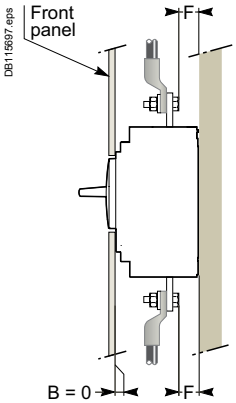

Bare or painted sheetmetal

***Note**: if F < 8 mm: an insulating screen or long terminal shield is mandatory (see page A-85).*

Minimum distance between circuit breaker and top, bottom or side panels

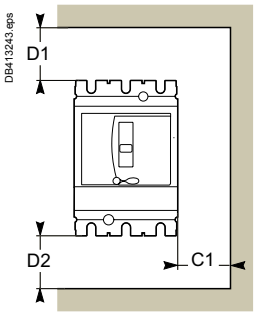

Devices without accessories.

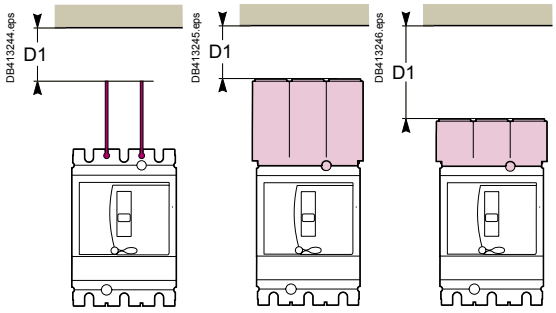

Devices with interphase barriers or long or short terminal shields.

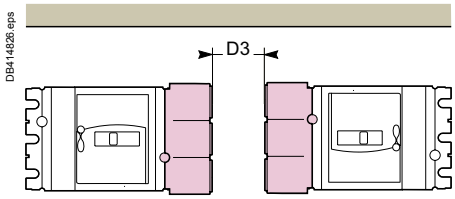

Short terminal shield rear connected.

Minimum safety clearances for Compact NSX100 to 630

Operating voltage	Clearance (mm)							
	Between devices	Between device and sheetmetal						
		Painted sheet metal			Bare sheet metal			
	A1	C1	D1	D2	C1	D1	D2	D3
U ⩽ 440 V								
for devices equipped with:								
■ no accessories	0	0	30	30	5	40	40	-
■ short terminal shields	0	0	30	30	5	40	40	50
■ interphase barriers	0	0	0	0	5	0	0	-
■ long terminal shields	0	0	0	0	0	0	0	-
440 V < U ⩽ 600 V								
for devices equipped with:								
■ short terminal shields	0	0	30	30	10	40	40	50
■ interphase barriers (1)	0	0	0	0	20	10	10	-
■ long terminal shields (2)	0	0	0	0	10	10	10	-
U > 600 V								
for devices equipped with:								
■ short terminal shields	0	10	50	50	20	100	100	50
■ long terminal shields	0	10	30	30	20	40	40	-

(1) Only for NSX100 to 250.
(2) For all cases.

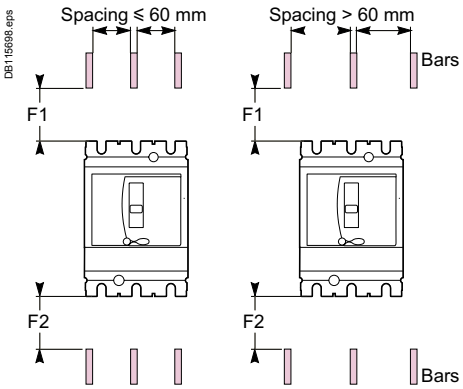

Live busbars.

Clearances with respect to live bare busbars

Minimum clearances for Compact NSX100 to 630

Operating voltage	Clearances with respect to live bare busbars			
	spacing ⩽ 60 mm		spacing > 60 mm	
	F1	F2	F1	F2
U < 440 V	350	350	80	80
440 V ⩽ U ⩽ 600 V	350	350	120	120
U > 600 V	prohibited: insulating screen required between device and busbars			

These clearances can be reduced for special installations as long as the configuration is checked by tests.

Control wiring

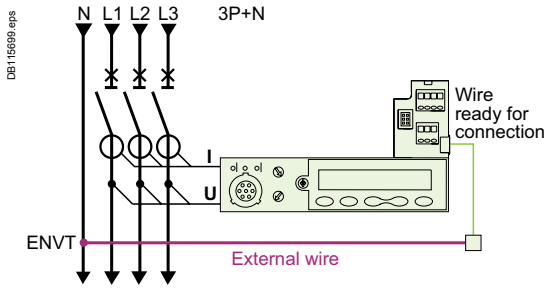

External neutral voltage tap (ENVT).

Remote tripping by MN or MX release

Power consumption is approximately:
- 30 VA for pick-up of the MN and MX releases
- 300 VA to 500 VA for the motor mechanism.

The table below indicates the maximum permissible cable length for different supply voltages and cable cross-sectional areas.

Recommended maximum cable lengths (in metres)

Power supply voltage (V DC)		12 V		24 V		48 V	
Cable cross-section (mm²)		1.5	2.5	1.5	2.5	1.5	2.5
MN	U source 100 %	15	–	160	–	640	–
	U source 85 %	7	–	40	–	160	–
MX	U source 100 %	60	–	240	–	960	–
	U source 85 %	30	–	120	–	480	–
Motor mechanism	U source 100 %	–	–	10	16	65	110
	U source 85 %	–	–	2	4	17	28

***Note**: the indicated length is that of each of the two wires.*

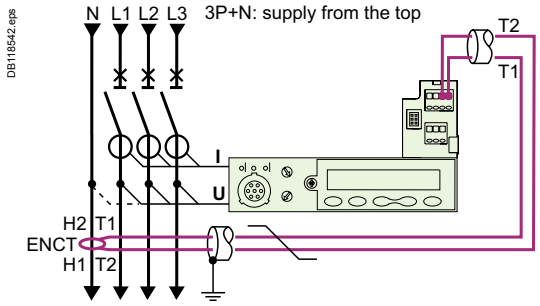

External neutral voltage tap (ENVT)

This connection is required for accurate power measurements on 3-pole circuit breakers equipped with Micrologic 5 / 6 E trip units in installations with a distributed neutral. It can be used to measure phase-neutral voltages and calculate power using the 3 wattmeter method.

Compact NSX 3-pole circuit breakers come with a wire installed on the device for the connection to the ENVT.

This wire is equipped with a connector for connection to an external wire with the following characteristics:
- cross-sectional area of 1 mm² to 2.5 mm²
- maximum length of 10 metres.

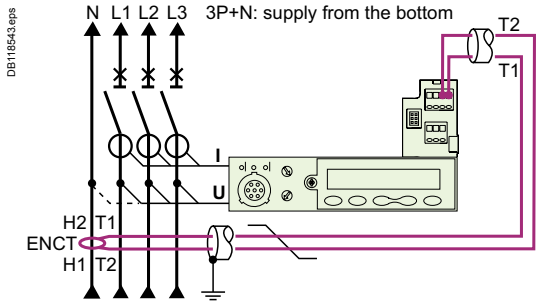

External neutral current transformer (ENCT).

External neutral current transformer (ENCT)

This connection is required to protect the neutral on 3-pole circuit breakers equipped with Micrologic 5 / 6 A or E trip units in installations with a distributed neutral. For Micrologic 6 A or E, it is required for type G ground-fault protection.

The ENCT is connected in the same way for fixed, plug-in or withdrawable devices:
- fixed devices are connected via terminals T1 and T2 of the internal terminal block.
- plug-in and withdrawable devices are not connected via the auxiliary terminals.

The wires must be connected/disconnected inside the device via terminals T1 and T2.

The ENCT must be connected to the Micrologic trip unit by a shielded twisted pair. The shielding should be connected to the switchboard earth only at the CT end, no more than 30 cm from the CT.
- the power connections of the CT to the neutral (H2 and H1) must be made in the same way for power supply from the top or the bottom (see figure). Make sure they are not reversed for devices with power supply from the bottom.
- cross-sectional area of 0.4 mm² to 1.5 mm²
- maximum length of 10 metres.

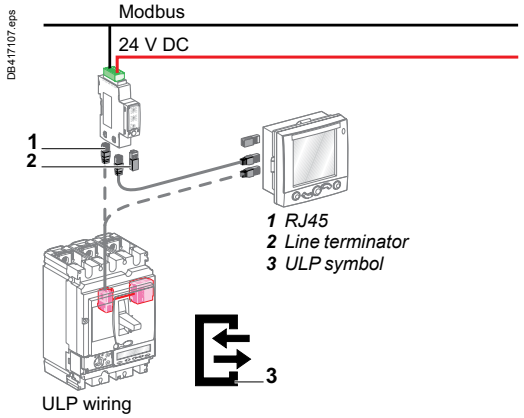

ULP connection system.

ULP connection system between Micrologic, FDM121 switchboard display and Modbus interface

The ULP (Universal Logic Plug) wiring system used by Compact NSX for connections through to the Modbus network requires neither tools nor settings. The prefabricated cords are sued for both data transfer and distribution of 24 V DC power. Connectors on each component are identified by ULP (Universal Logic Plug) symbols, ensuring total compatibility between each component.

Available cords

All connections are made with prefabricated cords:
- NSX cord for connection of the internal terminal block to the Modbus interface or the FDM121 display via an RJ45 connector. The cord is available in three lengths, 0.35 m, 1.3 m and 3 m
- ULP cords with RJ45 connectors at each end for the other connections between components. The cord is available in six lengths, 0.3 m, 0.6 m, 1 m, 2 m, 3 m and 5 m. For greater distances, two cords can be interconnected using the RJ45 female/female accessory.

Maximum length of 10 m between 2 modules and 30 m in all.

A line terminator must be fitted to all components with an unused RJ45 connector.

DB124606.eps

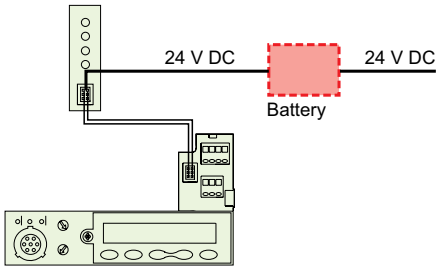

Power supply, without the Communication function, via the terminal block with a backup battery.

DB417108.eps

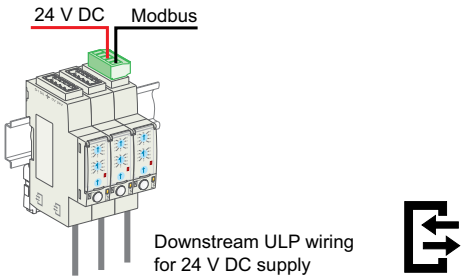

Supply, with the Communication function, via the Modbus interface.

DB416975.eps

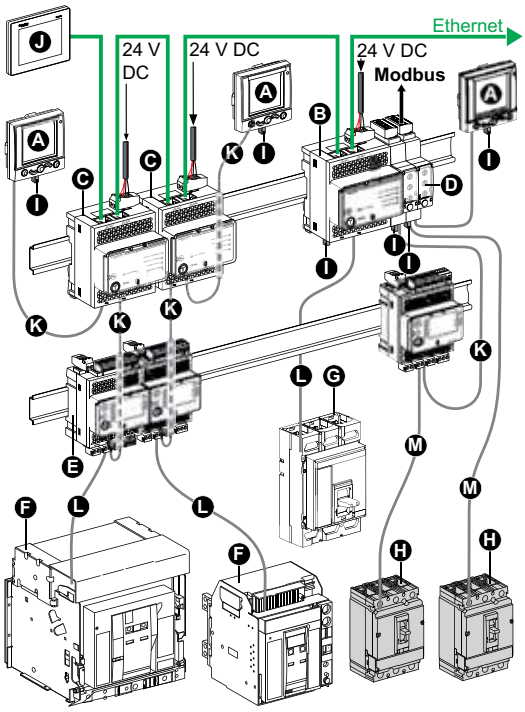

- Ⓐ FDM121 (TRV00121)
- Ⓑ IFE master (LV434011)
- Ⓒ IFE (LV434010)
- Ⓓ IFM (TRV00210)
- Ⓔ IO application module (LV434063)
- Ⓕ Masterpact NT/NW
- Ⓖ Compact NS630b-3200
- Ⓗ Compact NSX
- Ⓘ ULP termination (TRV00880)
- Ⓙ FDM128 (LV434128)
- Ⓚ ULP cable
- Ⓛ Breaker ULP cord
- Ⓜ NSX cord
- — Ethernet
- — Modbus

24 V DC power-supply module

Use

An external 24 V DC power supply is required for installations with communication, whatever the type of trip unit.
On installations without communication, it is available as an option for Micrologic 5/6 to:

- modify settings when the circuit breaker is open (OFF position)
- display measurements when the current flowing through the circuit breaker is low
- maintain the display of the cause of tripping.

Characteristics

The external 24 V DC supply may be used for the entire switchboard.
The required characteristics are indicated in the table below.

Characteristics	
Output voltage	24 V DC -20 % to +10 %
Ripple	±1 %
Overvoltage category (OVC)	OVC IV - as per IEC 60947-1

Sizing

Sizing must take into account all supplied modules.

Module	Consumption (mA)
Micrologic 5 / 6	40
BSCM module	10
FDM121	40
Modbus communication interface	60
NSX cord U > 480 V AC	30
SDx / SDTAM module	20

Wiring

Micrologic 5 or 6 not using the Communication function

The external 24 V DC supply is connected via the circuit breaker terminal block.
Use of a 24 V DC battery provides backup power for approximate 3 hours (100 mA) in the event of an interruption in the external supply.

Micrologic 5 or 6 using the Communication function

The external 24 V DC supply is connected via the Modbus interface using a five-pin connector, including two for the power supply. Stacking accessories (see page A-33) can be used to supply a number of interfaces by fast clip-on connection.
The 24 V DC power is distributed downstream by the ULP (Universal Logic Plug) communication cords with RJ45 connectors. This system ensures both data transfer and power distribution to the connected modules.

Recommendations for 24 V DC wiring

- Do not connect the positive terminal to earth.
- Do not connect the negative terminal to earth.
- The maximum length for each conductor (+/-) is ten metres.
- For connection distances greater than ten metres, the plus and minus conductors of the 24 V DC supply must be twisted to improve EMC.
- The 24 V DC conductors must cross the power cables perpendicularly. If this is difficult or impossible, the plus and minus conductors must be twisted.

Modbus

Each Compact NSX circuit breaker equipped with Micrologic 5/6 and an FDM121 display is connected to the Modbus network via the Modbus interface module.
Connection of all the circuit breakers and other Modbus devices in the switchboard to a Modbus bus is made much easier by using a Modbus RJ45 junction block installed in the switchboard.

Recommendations for Modbus wiring

- The shielding may be earthed.
- The conductors must be twisted to improve immunity (EMC).
- The Modbus conductors must cross the power cables perpendicularly.

Temperature derating
Compact NSX100 to 250 equipped with thermal-magnetic trip units

When thermal-magnetic trip units are used at ambient temperatures other than 40 °C, the Ir pick-up is modified.

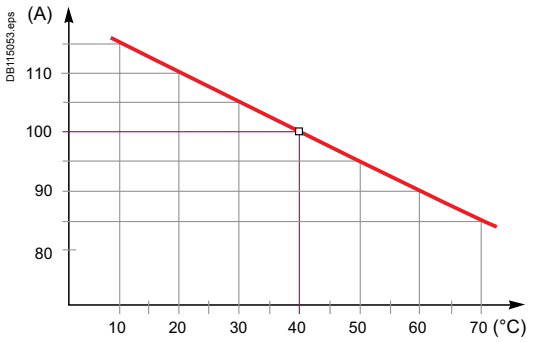

Temperature derating curve for Compact NSX100.

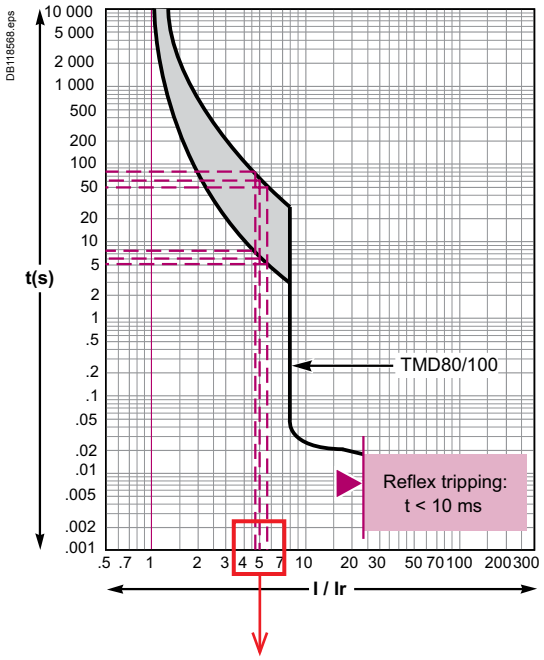

Example 1. Fault I = 500 A

I/Ir	4.5	5	5.5
T°C	20 °C	40 °C	60 °C
t min.	8 s	6 s	5 s
t max.	80 s	60 s	50 s

Thermal-protection curve with minimum and maximum values.

The overload protection is calibrated at 40 °C in the lab. This means that when the ambient temperature is less or greater than 40 °C, the Ir protection pick-up is slightly modified.
To obtain the tripping time for a given temperature:
- see the tripping curves for 40 °C (see page E-2 and page E-3)
- determine tripping times corresponding to the Ir value (thermal setting on the device), corrected for the ambient temperature as indicated in the tables below.

Settings of Compact NSX100 to 250 equipped with TM-D and TM-G trip units, as a function of the temperature

The table indicates the real Ir (A) value for a given rating and temperature.

Rat. (A)	Temperature (°C) 10	15	20	25	30	35	40	45	50	55	60	65	70
16	18.4	18.7	18	18	17	16.6	16	15.6	15.2	14.8	14.5	14	13.8
25	28.8	28	27.5	27	26.3	25.6	25	24.5	24	23.5	23	22	21
32	36.8	36	35.2	34.4	33.6	32.8	32	31.3	30.5	30	29.5	29	28.5
40	46	45	44	43	42	41	40	39	38	37	36	35	34
50	57.5	56	55	54	52.5	51	50	49	48	47	46	45	44
63	72	71	69	68	66	65	63	61.5	60	58	57	55	54
80	92	90	88	86	84	82	80	78	76	74	72	70	68
100	115	113	110	108	105	103	100	97.5	95	92.5	90	87.5	85
125	144	141	138	134	131	128	125	122	119	116	113	109	106
160	184	180	176	172	168	164	160	156	152	148	144	140	136
200	230	225	220	215	210	205	200	195	190	185	180	175	170
250	288	281	277	269	263	256	250	244	238	231	225	219	213

Example 1. What is the tripping time of a Compact NSX100 equipped with a TM100D trip unit set to 100 A, for an overload I = 500 A?
The overload I/Ir is calculated as a function of the temperature. Use the above values and the curve on page E-3 (shown on the left) to determine the corresponding time.
- At 40 °C, Ir = 100 A, I/Ir = 5 and the tripping time is between 6 and 60 seconds.
- At 20 °C, Ir = 110 A, I/Ir = 4.54 and the tripping time is between 8 and 80 seconds.
- At 60 °C, Ir = 90 A, I/Ir = 5.55 and the tripping time is between 5 and 50 seconds.

Example 2. What is the setting to obtain a real Ir of 210 A, taking into account the temperature, for a Compact NSX250 equipped with a TM250D trip unit?
The necessary dial setting, in amperes, is shown below.
- At 40 °C, Ir = (210/250) x 250 A = 210 A
- At 20 °C, Ir = (210/277) x 250 A = 189.5 A
- At 60 °C, Ir = (210/225) x 250 A = 233 A

Additional derating coefficient for an add-on module

The values indicated in the previous tables are valid for **fixed** circuit breakers equipped with one of the following modules:
- Vigi module
- insulation monitoring module
- ammeter module
- current-transformer module.

They also apply for **plug-in or withdrawable** circuit breakers equipped with:
- ammeter module
- current-transformer module.

However, for **plug-in or withdrawable** circuit breakers equipped with a Vigi module or an insulation monitoring module, the coefficient 0.84 must be applied.
The table below sums up the situation for add-on modules.

Type of device	Circuit breaker	TM-D trip-unit rating	Vigi or insulation monitoring module	Ammeter or current transformer module
Fixed	NSX100	16 to 100	1	1
	NSX160 to 250	125 to 160		
	NSX250	200 to 250		
Plug-in or withdrawable	NSX100	16 to 100		
	NSX160	125 to 160		
	NSX250	200 to 250	0.84	

Electronic trip units are not affected by variations in temperature. If the trip units are used in high-temperature environments, the Micrologic setting must nevertheless take into account the temperature limits of the circuit breaker.

Changes in temperature do not affect measurements by electronic trip units.
- The built-in CT sensors with Rogowski toroids measure the current.
- The control electronics compare the value of the current to the settings defined for 40 °C.

Because temperature has no effect on the toroid measurements, the tripping thresholds do not need to be modified.
However, the temperature rise caused by the flow of current and the ambient temperature increase the temperature of the device. To avoid reaching the thermal withstand level of the equipment, it is necessary to limit the current flowing through the device, i.e. the maximum Ir setting as a function of the temperature.

Compact NSX100/160/250

The table below indicates the maximum long-time (LT) protection setting Ir (A) depending on the ambient temperature.

Type of device	Rating (A)	Temperature (°C)						
		40	45	50	55	60	65	70
NSX100/160								
Fixed, plug-in or withdrawable	**100**	no derating						
	160	no derating						
NSX250								
Fixed	**250**	250	250	250	245	237	230	225
Plug-in or withdr.	**250**	250	245	237	230	225	220	215

Compact NSX400 and 630

The table below indicates the maximum long-time (LT) protection setting Ir (A) depending on the ambient temperature.

Type of device	Rating (A)	Temperature (°C)						
		40	45	50	55	60	65	70
NSX400								
Fixed	**400**	400	400	400	390	380	370	360
Plug-in/withdr.	**400**	400	390	380	370	360	350	340
NSX630								
Fixed	**630**	630	615	600	585	570	550	535
Plug-in/withdr.	**630**	570	550	535	520	505	490	475

Example. A fixed Compact NSX400 equipped with a Micrologic can have a maximum Ir setting of:
- *400 A up to 50 °C*
- *380 A up to 60 °C.*

Additional derating coefficient for an add-on module

For **fixed** or **plug-in / withdrawable** circuit breakers, the addition of a:
- Vigi module
- insulation-monitoring module
- ammeter module
- current-transformer module

can modify the derating values. Apply the coefficients shown below.

Derating of a Compact NSX equipped with a Micrologic trip unit

Type of device	Circuit breaker	Micrologic rating	Vigi / Insulation monitoring module	Ammeter module / External sensor (CT)
Fixed	NSX100	40 to 100	1	1
	NSX160	40 to 160		
	NSX250	40 to 250		
Plug-in or withdrawable	NSX100	40 to 100		
	NSX160	40 to 160		
	NSX250	40 to 250	0.86	
Fixed	NSX400	250 to 400	0.97	
	NSX630	250 to 630	0.90	
Plug-in or withdrawable	NSX400	250 to 400	0.97	
	NSX630	250 to 630	0.90	

***Note**: to provide the Visu function, Compact NSX circuit breakers, with or without a Vigi module, are combined with INV switch-disconnectors. Tripping values for the selected combination are indicated in the Compact INS/INV catalogue.*

Power loss/ Resistance

Compact NSX equipped with thermal-magnetic trip units

Compact NSX thermal power loss values are used to calculate total temperature rise in the switchboard in which the circuit breakers are installed.

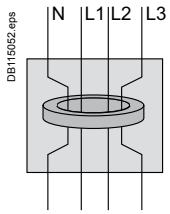

With a Vigi module, the deviation of the N and L3 bars required to pass through the toroid results in higher power losses compared to those of the L1 and L2 bars.

The values indicated in the tables below are typical values for a device at full rated load and 50/60 Hz.

Power loss per pole (P/pole) in Watts (W)
The value indicated is the power loss at I_N, 50/60 Hz, for a three-pole or four-pole circuit breaker. Measurement and calculation of power loss are carried out in compliance with the recommendations of Annex G of standard IEC 60947-2.

Resistance per pole (R/pole) in milliohms (mΩ)
The value of the resistance per pole is provided as a general indication for a new device.
The value of the contact resistance must be determined on the basis of the measured voltage drop, in accordance with the manufacturer's test procedure (ABT instruction document no. 1 - BEE - 02.2 -A).
***Note**: this measurement is not sufficient to determine the quality of the contacts, i.e. the capacity of the circuit breaker to carry its rated current.*

Additional power loss
Additional power loss is equal to the sum of the power dissipated by the following:
- Vigi module: note that the deviation of the N and L3 bars required to pass through the toroid results in higher power losses compared to those of the L1 and L2 bars (diagram opposite). When calculating total power loss, use L1, L2, L3 for a 3P device and N, L1, L2, L3 for a 4P device
- disconnecting contacts (plug-in and withdrawable devices)
- ammeter module
- transformer module.

Calculation of total power loss
Total power loss at full rated load and 50/60 Hz is equal to the sum of the device and additional power losses per pole multiplied by the number of poles (2, 3 or 4).
If a Vigi module is installed, it is necessary to differentiate between N and L3 on one hand and L1 and L2 on the other.

Compact NSX100 to 250 equipped with TM-D and TM-G trip units

Type of device		Fixed device		Additional power / pole				
3/4 poles	Rat. (A)	R/pole	P/pole	Vigi (N, L3)	Vigi (L1, L2)	Plug-in / withdr.	Ammeter module	Transfo. module
NSX100	**16**	11.42	2.92	0	0	0	0	0
	25	6.42	4.01	0	0	0.1	0	0
	32	3.94	4.03	0.06	0.03	0.15	0.1	0.1
	40	3.42	5.47	0.10	0.05	0.2	0.1	0.1
	50	1.64	4.11	0.15	0.08	0.3	0.1	0.1
	63	2.17	8.61	0.3	0.15	0.4	0.1	0.1
	80	1.37	8.77	0.4	0.2	0.6	0.1	0.1
	100	0.88	8.8	0.7	0.35	1	0.2	0.2
NSX160	**80**	1.26	8.06	0.4	0.2	0.6	0.1	0.1
	100	0.77	7.7	0.7	0.35	1	0.2	0.2
	125	0.69	10.78	1.1	0.55	1.6	0.3	0.3
	160	0.55	13.95	1.8	0.9	2.6	0.5	0.5
NSX250	**125**	0.61	9.45	1.1	0.55	1.6	0.3	0.3
	160	0.46	11.78	1.8	0.9	2.6	0.5	0.5
	200	0.39	15.4	2.8	1.4	4	0.8	0.8
	250	0.3	18.75	4.4	2.2	6.3	1.3	1.3

Compact NSX100 to 630 equipped with MA/1.3-M trip units

Type of device		Fixed device		Additional power / pole				
3 poles	Rat. (A)	R/pole	P/pole	Vigi (N, L3)	Vigi (L1, L2)	Plug-in / withdr.	Ammeter module	Transfo. module
NSX100	**2.5**	148.42	0.93	0	0	0	0	0
	6.3	99.02	3.93	0	0	0	0	0
	12.5	4.05	0.63	0	0	0	0	0
	25	1.66	1.04	0	0	0.1	0	0
	50	0.67	1.66	0.2	0.1	0.3	0.1	0.1
	100	0.52	5.2	0.7	0.35	1	0.2	0.2
NSX160	**150**	0.38	8.55	1.35	0.68	2.6	0.45	0.45
NSX250	**220**	0.3	14.52	2.9	1.45	4.89	0.97	0.97
NSX400	**320**	0.12	12.29	3.2	1.6	6.14	1.54	1.54
NSX630	**500**	0.1	25	13.99	7	15	3.75	3.75

The values indicated in the table below are typical values for a device at full rated load and 50/60 Hz. The definitions and information are the same as that for circuit breakers equipped with thermal-magnetic trip units.

Compact NSX100 to 630 equipped with Micrologic trip units

Type of device		Fixed device		Additional power / pole				
3/4 poles	Rat. (A)	R/pole	P/pole	Vigi (N, L3)	Vigi (L1, L2)	Plug-in / withdr.	Ammeter module	Transfo. module
NSX100	**40**	0.84	1.34	0.1	0.05	0.2	0.1	0.1
	100	0.468	4.68	0.7	0.35	1	0.2	0.2
NSX160	**40**	0.73	1.17	0.4	0.2	0.6	0.1	0.1
	100	0.36	3.58	0.7	0.35	1	0.2	0.2
	160	0.36	9.16	1.8	0.9	2.6	0.5	0.5
NSX250	**100**	0.27	2.73	1.1	0.55	1.6	0.2	0.2
	250	0.28	17.56	4.4	2.2	6.3	1.3	1.3
NSX400	**400**	0.12	19.2	3.2	1.6	9.6	2.4	2.4
NSX630	**630** (1)	0.1	39.69	6.5	3.25	19.49	5.95	5.95

(1) The power loss values for the Vigi modules and withdrawable circuit breakers are given for 570 A.

Easy installation



Dimensions and connection
Contents

Functions and characteristics *A-1*
Installation recommendations *B-1*

Dimensions, mounting, cutout **C-2**
Compact NSX100 to NSX250 fixed version, 1P-2P C-2

Dimensions and mounting **C-4**
Compact NSX100 to 630 fixed version C-4
Vigicompact NSX100 to 630 fixed version C-5
Compact NSX100 to 630 plug-in version C-6
Compact NSX100 to 630 withdrawable version C-8
Vigicompact NSX100 to 630 plug-in and withdrawable versions C-10
Visu function for Compact NSX100 to 250 fixed version C-11
Visu function for Compact NSX400/630 fixed version C-12
Motor mechanism module for Compact NSX100 to 630 C-13
Direct rotary handle for Compact and Vigicompact NSX100 to 630 C-14
MCC and CNOMO type direct rotary handles for Compact NSX100 to 630 fixed version C-15
Extended rotary handle for Compact NSX100 to 630 C-16
Indication and measurement modules for Compact NSX100 to 630 fixed version C-17
One-piece spreader for Compact NSX100 to 250 fixed version C-18
External modules C-19
FDM121 switchboard display C-20
FDM128 switchboard display C-21

Front-panel accessories **C-22**
Compact NSX100 to 630 C-22

Front-panel accessories **C-23**

Front-panel cutouts **C-24**
Compact NSX100 to 630 fixed version C-24
Vigicompact NSX100 to 630 fixed version C-26
Compact NSX100 to 630 plug-in and withdrawable versions C-28
Vigicompact NSX100 to 630 plug-in and withdrawable versions C-29
Visu function for Compact NSX100 to 630 fixed version C-30
Motor mechanism module for Compact and Vigicompact NSX100 to 630 C-31
Direct rotary handle for Compact and Vigicompact NSX100 to 630 C-32
Indication and measurement modules for Compact NSX100 to 630 C-34

Power connections **C-36**
Compact and Vigicompact NSX100 to 630 fixed version C-36
Compact and Vigicompact NSX100 to 630 plug-in and withdrawable versions C-40
Connection of insulated bars or cables with lugs to Compact and Vigicompact NSX100 to 630 C-44
Connection of bare cables to Compact and Vigicompact NSX100 to 630 C-45

Wiring diagrams *D-1*
Additional characteristics *E-1*
Glossary *G-1*

Dimensions, mounting, cutout
Compact NSX100 to NSX250
fixed version, 1P-2P

Dimensions

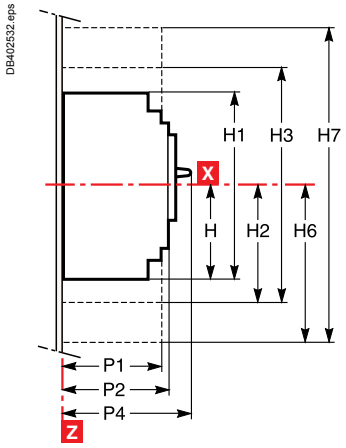

1 pole

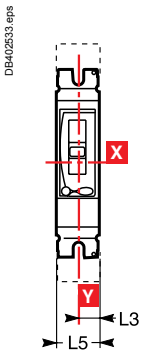

2 poles

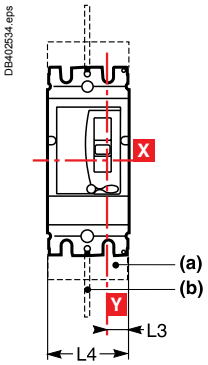

(a) Short terminal shields.
(b) Interphase barriers.

Mounting

On backplate

1 pole

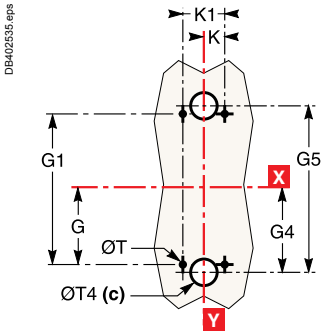

(c) For rear connection only.

2 poles

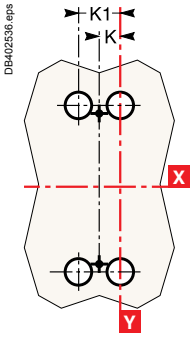

On rails

1 pole

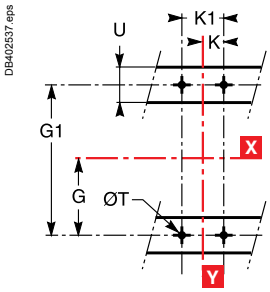

2 poles

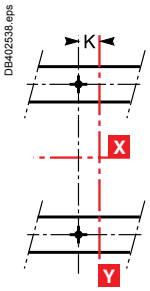

Front-panel cutout

On backplate

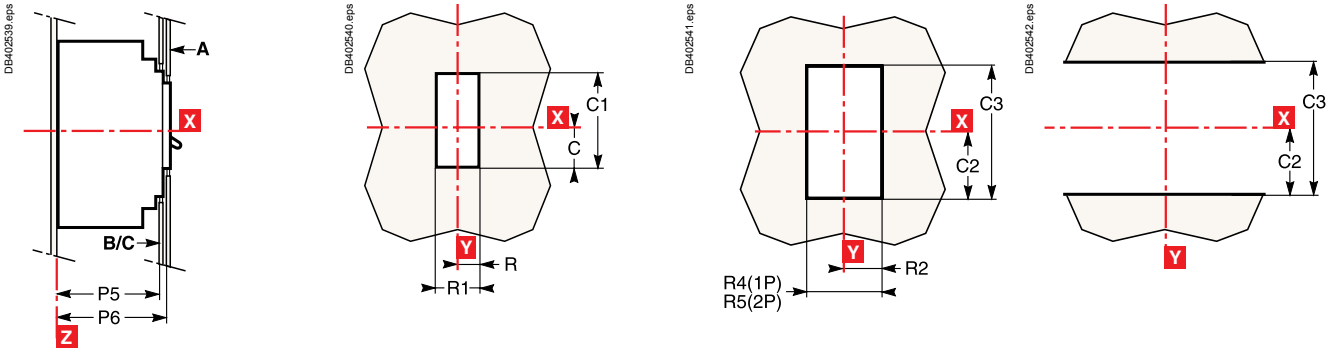

With escutcheon

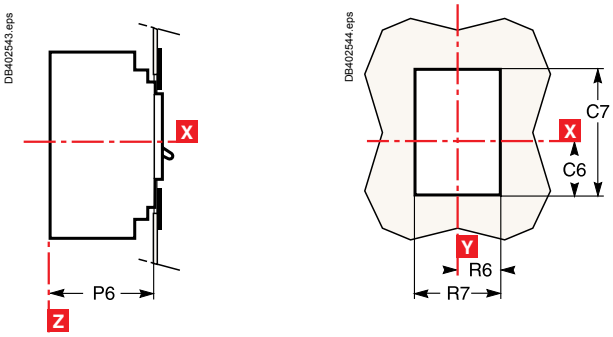

Dimensions (mm)

Type	C	C1	C2	C3	C6	C7	G	G1	G4	G5	H
NSX100/250	29	76	54	108	43	104	62.5	125	70	140	80.5
Type	**H1**	**H2**	**H3**	**H4**	**H6**	**H7**	**K**	**K1**	**L3**	**L4**	**L5**
NSX100/250	161	94	188	160.5	178.5	357	17.5	35	17.5	70	35
Type	**P1**	**P2**	**P4**	**P5**	**P6**	**R**	**R1**	**R2**	**R4**	**R5**	**R6**
NSX100/250	81	86	111	83	88	14.5	29	19	38	73	29
Type	**R7**	**ØT**	**ØT4**	**U**							
NSX100/250	58	6	22	⩽ 32							

Dimensions and mounting
Compact NSX100 to 630 fixed version

Dimensions

2/3P

4P

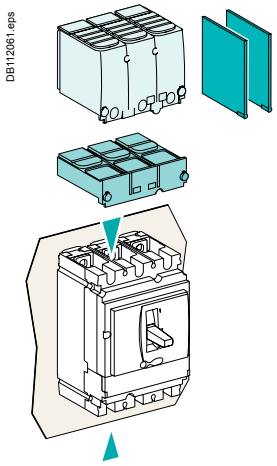

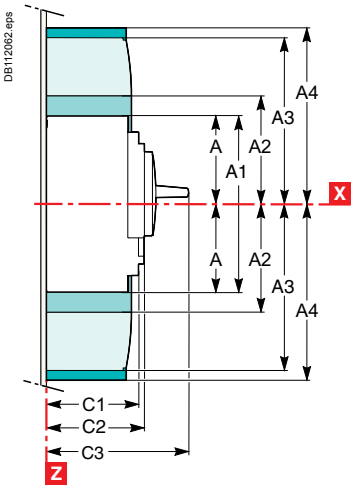

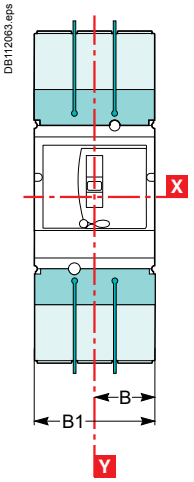

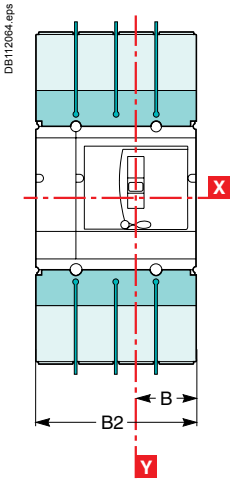

Interphase barriers.
Short terminal shields.

Long terminal shields (also available for NSX400/630 spreaders with 52.5 mm pitch: B1 = 157.5 mm, B2 = 210 mm).

Mounting

	NSX100 to 250	NSX400/630 (2)	NSX100 to 630 (2)
On backplate	**2/3P**	**3P**	**4P**

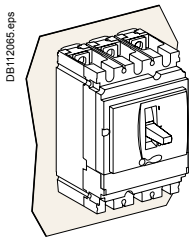

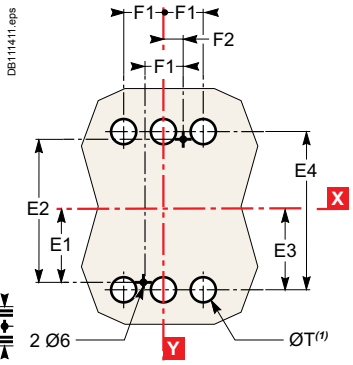

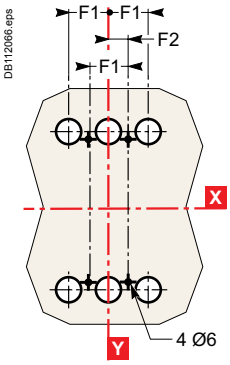

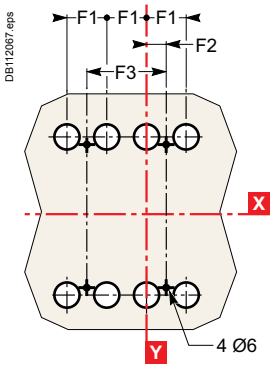

(2) For 630 A only:

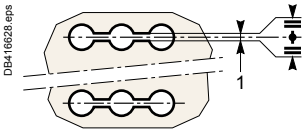

(1) The ØT holes are required for rear connection only.
For two-pole circuit breakers, the middle holes are not required.

	2/3P	3P	4P
On rails			

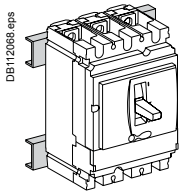

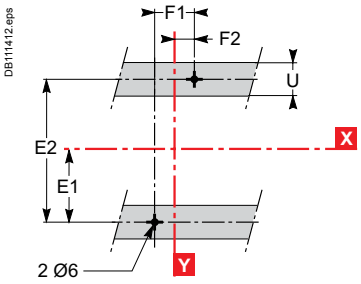

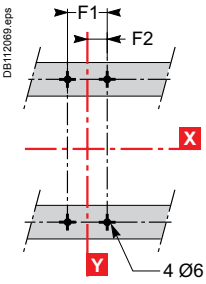

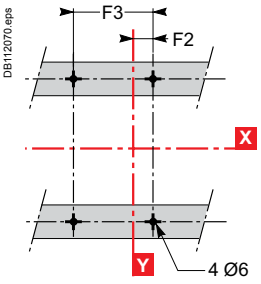

On DIN rail with adapter plate (NSX100 to 250)

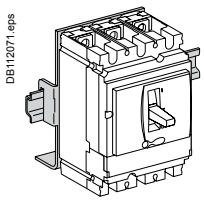

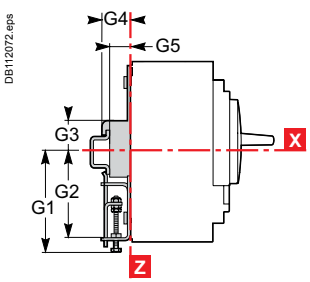

Dimensions

3/4P

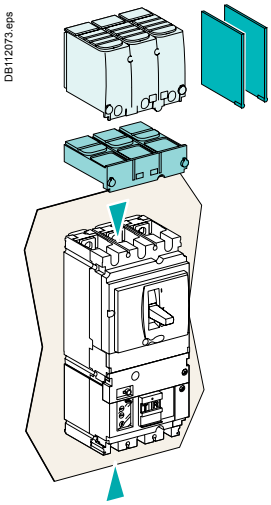

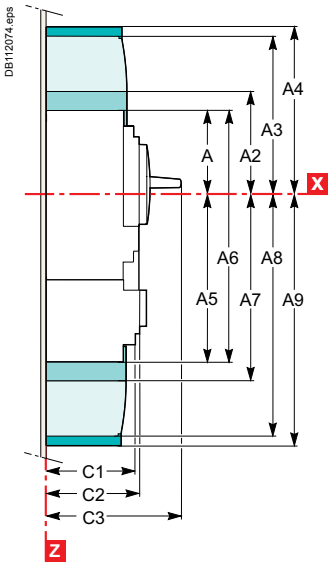

3/4P

NSX100 to 250

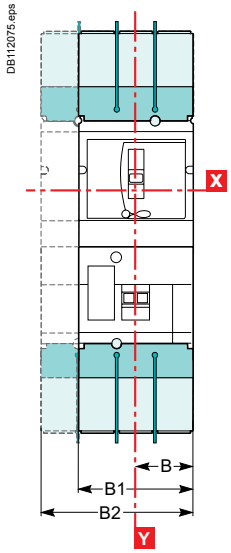

NSX400/630

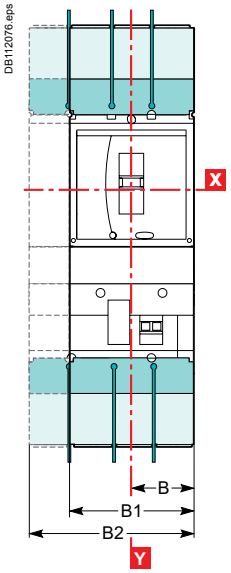

Mounting

On backplate

NSX100 to 250 — 3P

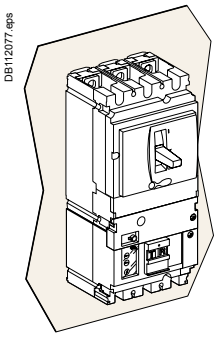

(2) For 630 A only:

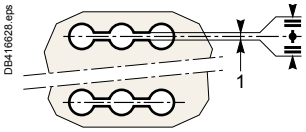

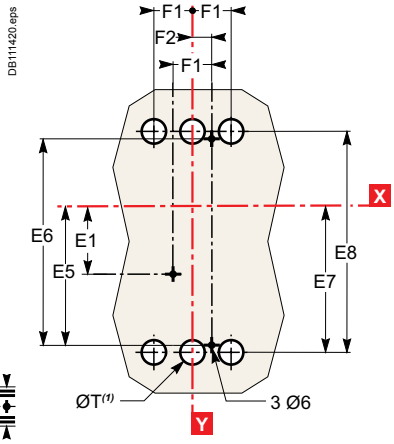

NSX400/630 (2) — 3P

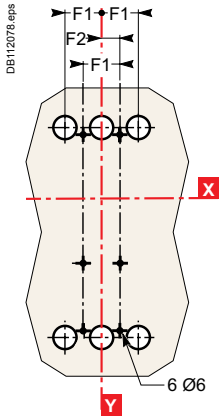

NSX100 to 630 (2) — 4P

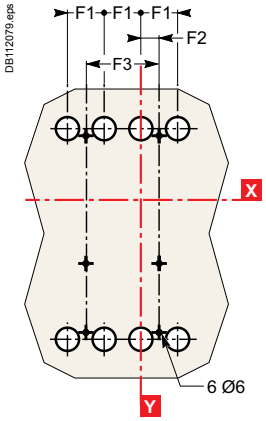

(1) The ØT holes are required for rear connection only.
For two-pole circuit breakers, the middle holes are not required.

On rails

NSX100 to 250 — 3P

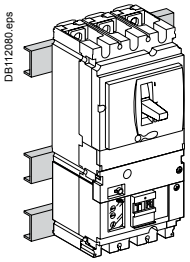

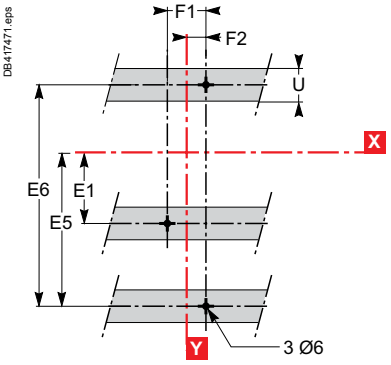

NSX400/630 (2) — 3P

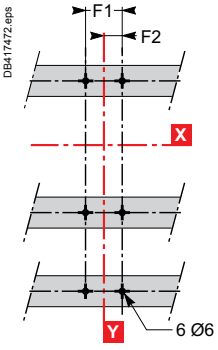

NSX100 to 630 (2) — 4P

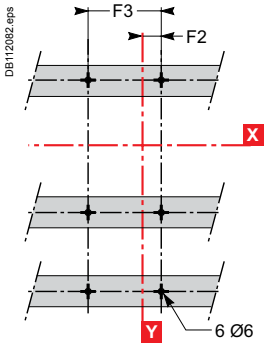

Type	A	A1	A2	A3	A4	A5	A6	A7	A8	A9	B	B1	B2	C1	C2	C3	E1
NSX100/160/250	80.5	161	94	145	178.5	155.5	236	169	220	253.5	52.5	105	140	81	86	126	62.5
NSX400/630	127.5	255	142.5	200	237	227.5	355	242.5	300	337	70	140	185	105	110	168	100
Type	**E2**	**E3**	**E4**	**E5**	**E6**	**E7**	**E8**	**F1**	**F2**	**F3**	**G1**	**G2**	**G3**	**G4**	**G5**	**ØT**	**U**
NSX100/160/250	125	70	140	137.5	200	145	215	35	17.5	70	95	75	13.5	23	17.5	24	⩽ 32
NSX400/630	200	113.5	227	200	300	213.5	327	45	22.5	90	-	-	-	-	-	32	⩽ 35

Dimensions and mounting
Compact NSX100 to 630 plug-in version

Dimensions

2/3P 4P

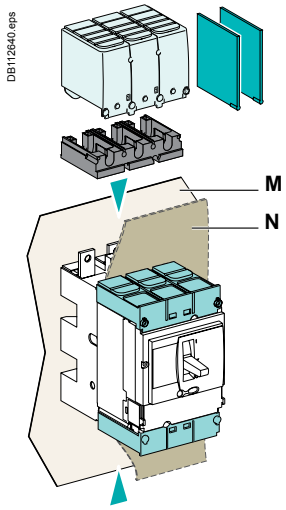

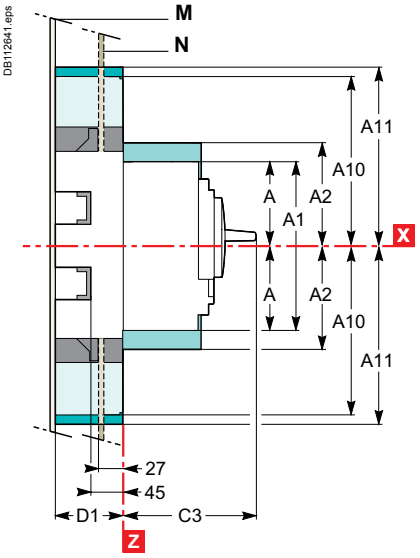

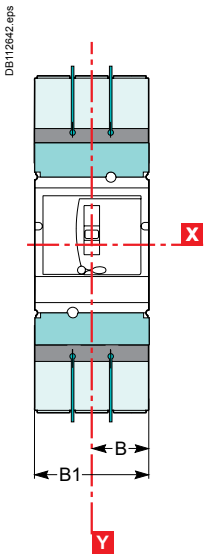

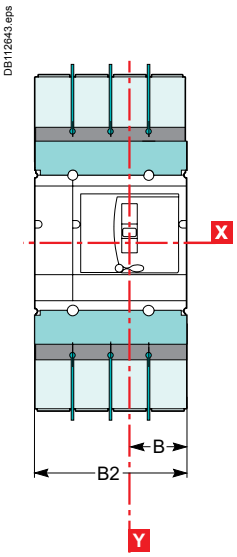

Interphase barriers for base.
Short terminal shields on circuit breaker.

Long terminal shields (also available for NSX400/630 spreaders with 52.5 mm pitch: B1 = 157.5 mm, B2 = 210 mm).
Adapter for base, required to mount long terminal shields or interphase barriers.

Mounting

Through front panel (N)	2/3P	3P	4P
	NSX100 to 250	NSX400/630	NSX100 to 630

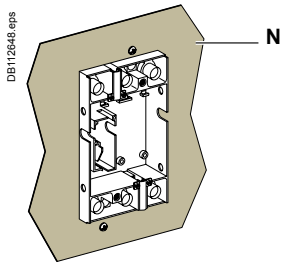

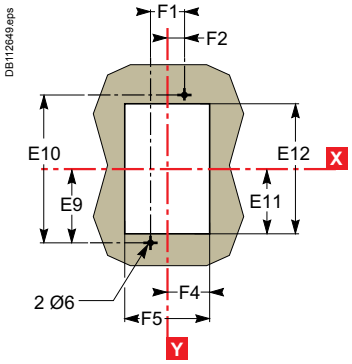

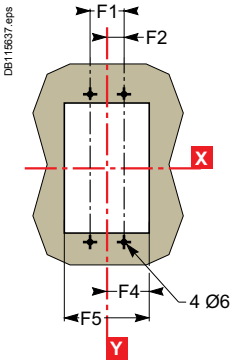

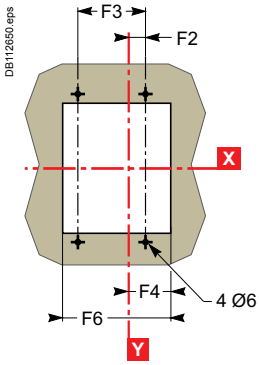

On backplate (M) — 2/3P — 4P

Front connection (an insulating screen is supplied with the base and must be fitted between the base and the backplate)

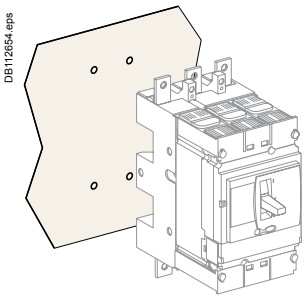

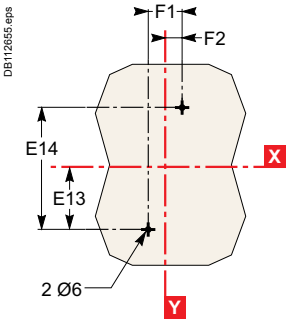

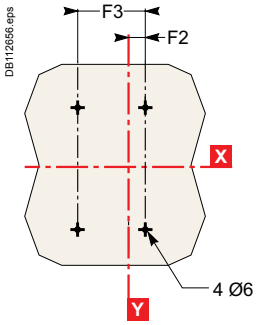

Connection by exterior-mounted rear connectors

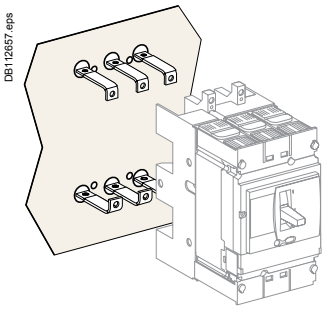

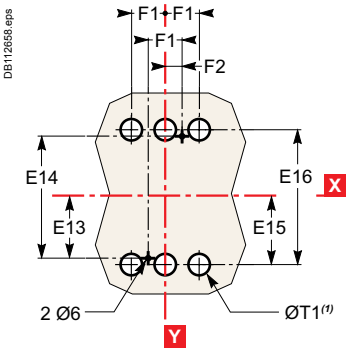

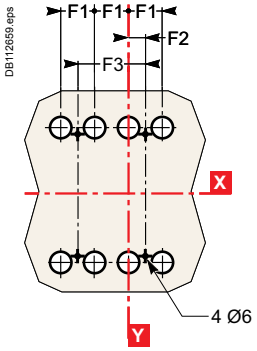

(1) The ØT1 holes are required for rear connection only (for two-pole circuit breakers, the middle holes are not required).

Connection by interior-mounted rear connectors

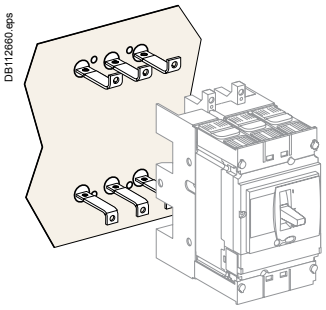

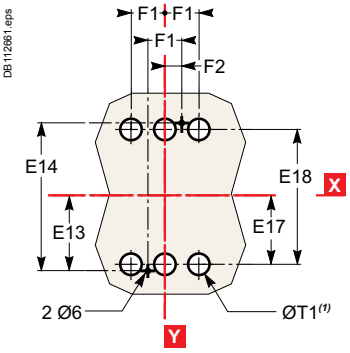

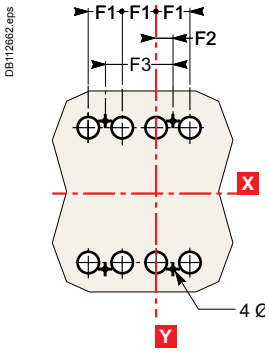

(1) The ØT1 holes are required for rear connection only (for two-pole circuit breakers, the middle holes are not required).

On rails — 2/3P — 4P

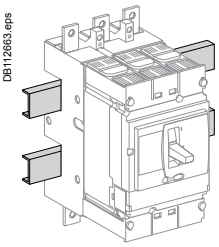

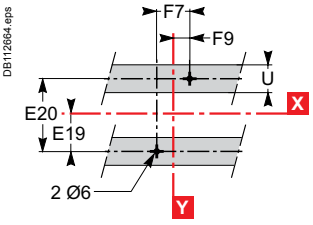

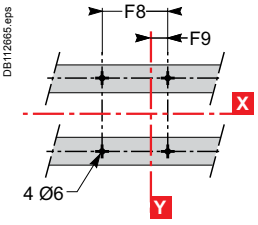

Type	A	A1	A2	A10	A11	B	B1	B2	C3	D1	E9	E10	E11	E12	E13	E14	E15
NSX100/160/250	80.5	161	94	175	210	52.5	105	140	126	75	95	190	87	174	77.5	155	79
NSX400/630	127.5	255	142.5	244	281	70	140	185	168	100	150	300	137	274	125	250	126

Type	E16	E17	E18	E19	E20	F1	F2	F3	F4	F5	F6	F7	F8	F9	ØT1	U
NSX100/160/250	158	61	122	37.5	75	35	17.5	70	54.5	109	144	70	105	35	24	⩽ 32
NSX400/630	252	101	202	75	150	45	22.5	90	71.5	143	188	100	145	50	33	⩽ 35

Dimensions and mounting
Compact NSX100 to 630 withdrawable version

Dimensions

2/3P 4P

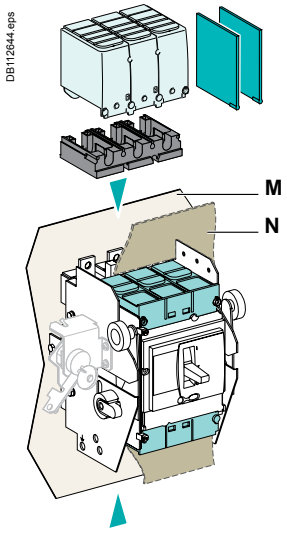

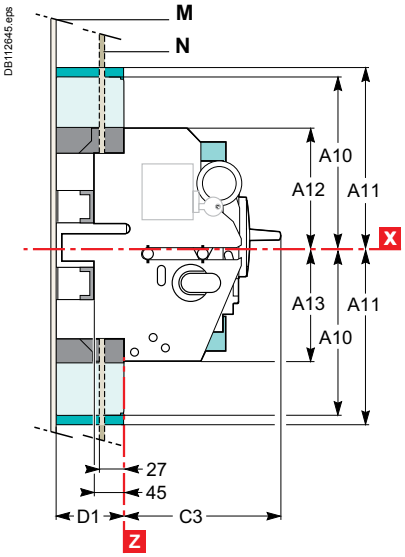

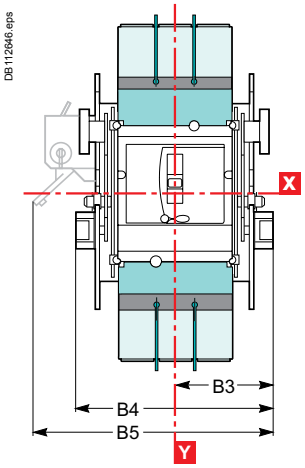

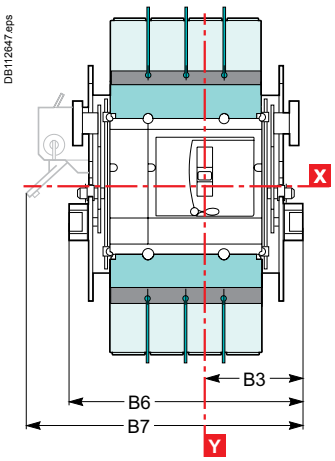

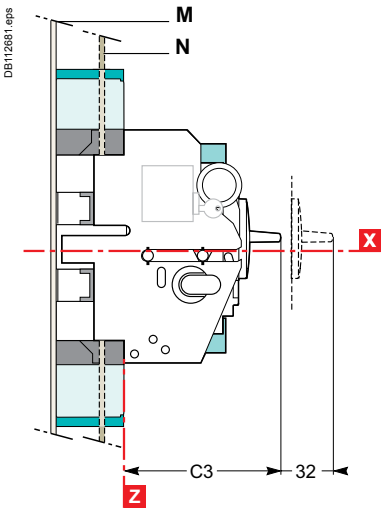

Interphase barriers for base.
Short terminal shields on circuit breaker.

Long terminal shields.
Adapter for base, required to mount long terminal shields or interphase barriers.

Mounting

Through front panel (N)	2/3P	3P	4P
	NSX100 to 250	NSX400/630	NSX100 to 630

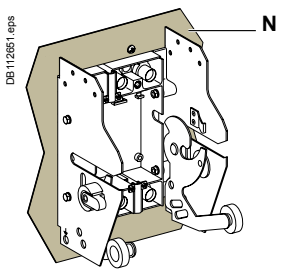

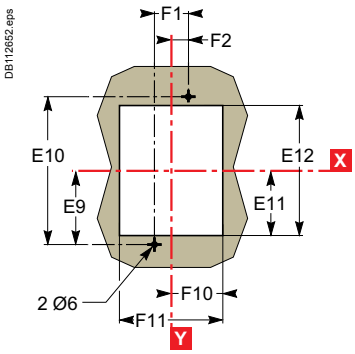

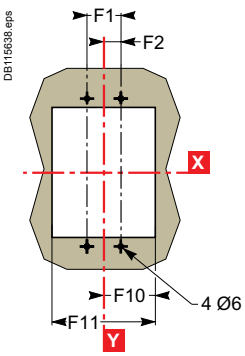

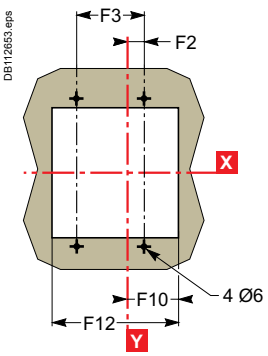

On backplate (M) 2/3P 4P

Front connection (an insulating screen is supplied with the base and must be fitted between the base and the backplate)

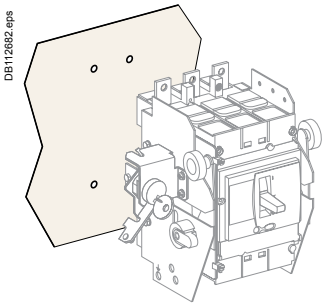

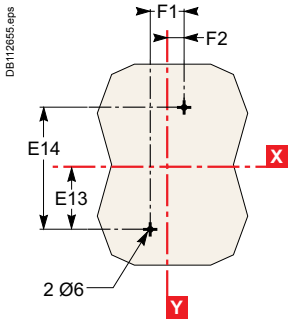

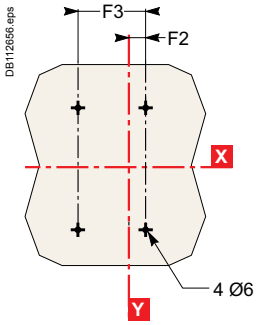

Connection by exterior-mounted rear connectors

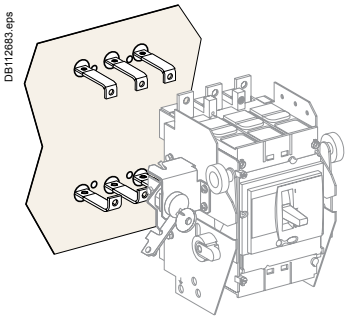

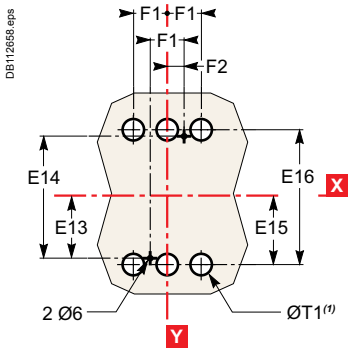

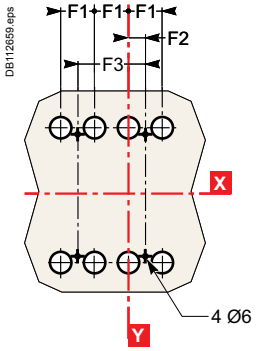

(1) The ØT1 holes are required for rear connection only (for two-pole circuit breakers, the middle holes are not required).

Connection by interior-mounted rear connectors

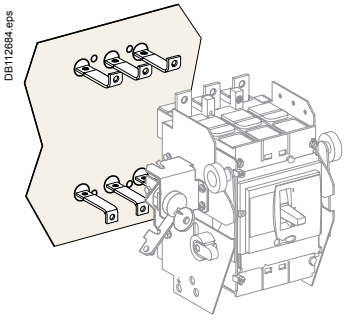

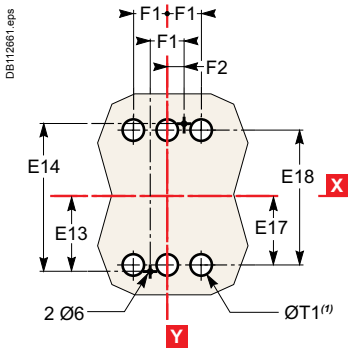

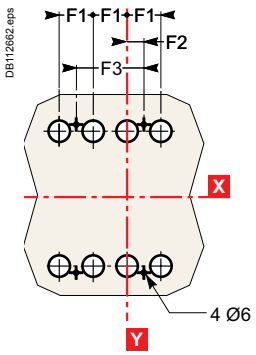

(1) The ØT1 holes are required for rear connection only (for two-pole circuit breakers, the middle holes are not required).

On rails 2/3P 4P

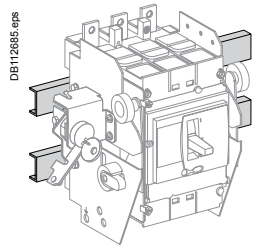

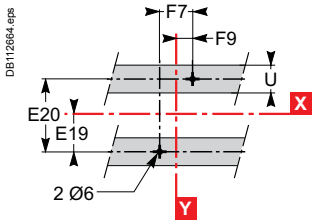

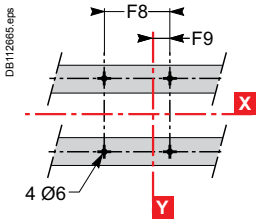

Type	A10	A11	A12	A13	B3	B4	B5	B6	B7	C3	D1	E9	E10	E11	E12	E13	E14
NSX100/160/250	175	210	106.5	103.5	92.5	185	216	220	251	126	75	95	190	87	174	77.5	155
NSX400/630	244	281	140	140	110	220	250	265	295	168	100	150	300	137	274	125	250
Type	**E15**	**E16**	**E17**	**E18**	**E19**	**E20**	**F1**	**F2**	**F3**	**F7**	**F8**	**F9**	**F10**	**F11**	**F12**	**ØT1**	**U**
NSX100/160/250	79	158	61	122	37.5	75	35	17.5	70	70	105	35	74	148	183	24	⩽ 32
NSX400/630	126	252	101	202	75	150	45	22.5	90	100	145	50	91.5	183	228	33	⩽ 35

Dimensions and mounting

Vigicompact NSX100 to 630 plug-in and withdrawable versions

Dimensions - plug-in version

	NSX100 to 250	NSX400/630
	3/4P	3/4P

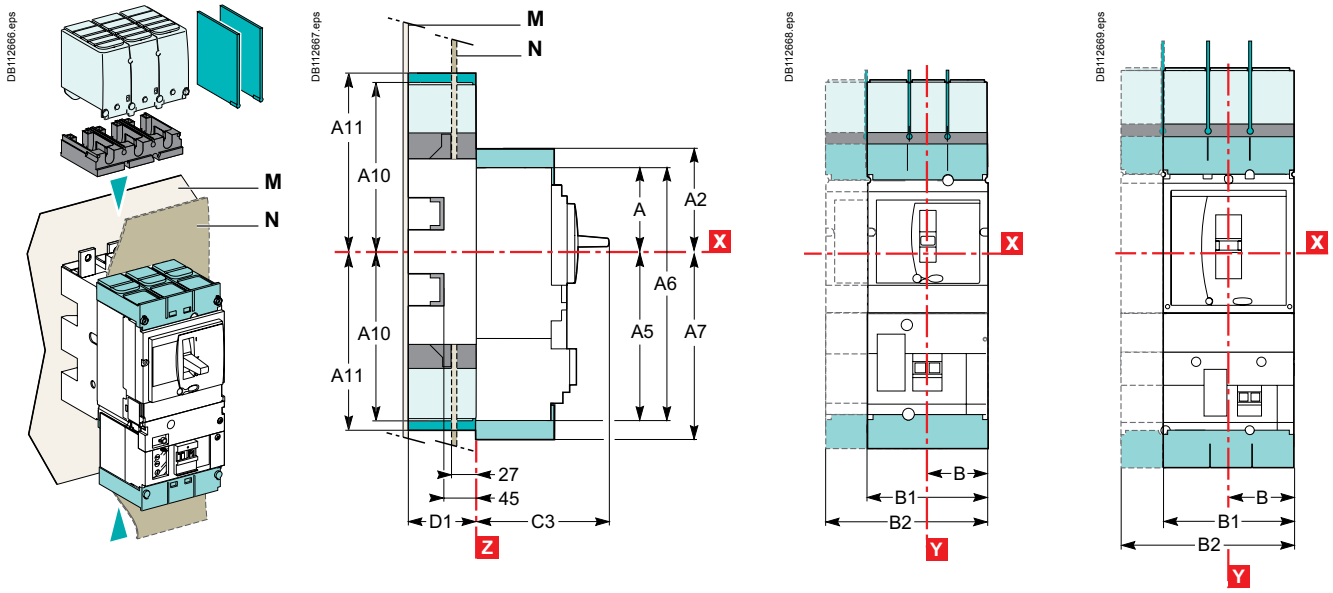

Interphase barriers for base.
Short terminal shields on circuit breaker.

Long terminal shields (also available for NSX400/630 spreaders with 52.5 mm pitch: B1 = 157.5 mm, B2 = 210 mm).
Adapter for base, required to mount long terminal shields or interphase barriers.

Dimensions - withdrawable version

	NSX100 to 630	
	3P	4P

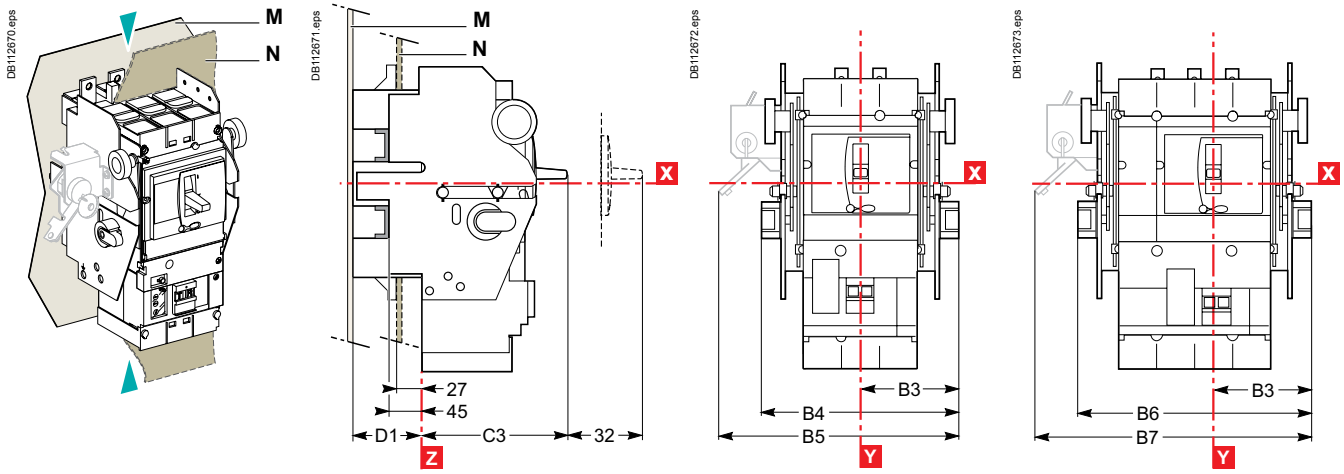

Mounting

Through front panel (N)

See Compact NSX100 to 630 plug-in version, page C-6, or withdrawable version, page C-8

On backplate (M)

See Compact NSX100 to 630 plug-in version, page C-7, or withdrawable version, page C-9

On rails

See Compact NSX100 to 630 plug-in version, page C-7, or withdrawable version, page C-9

Type	A	A2	A5	A6	A7	A10	A11	B	B1	B2	B3	B4	B5	B6	B7	C3	D1
NSX100/160/250	80.5	94	155.5	236	169	175	210	52.5	105	140	92.5	185	216	220	251	126	75
NSX400/630	127.5	142.5	227.5	355	242.5	244	281	70	140	185	110	220	250	265	295	168	100

Visu function for Compact NSX100 to 250 fixed version

Dimensions - combination with Compact INV100 to 250 3P 4P

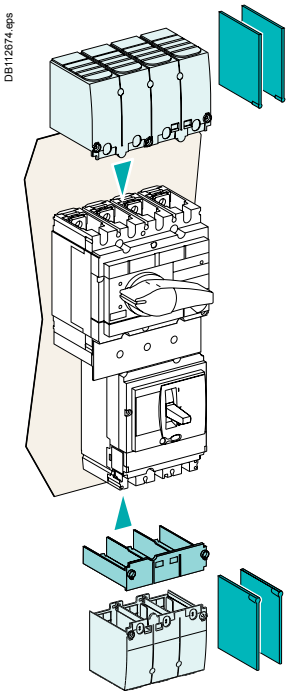

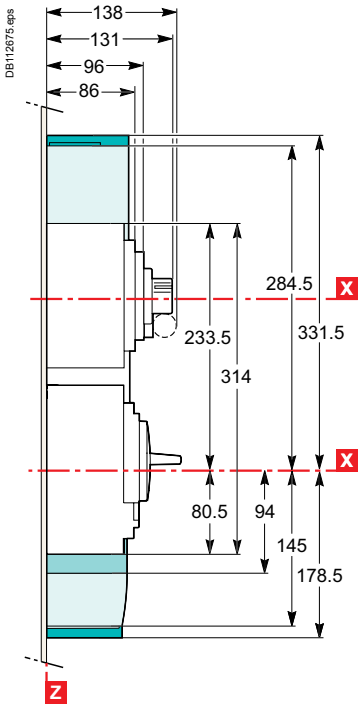

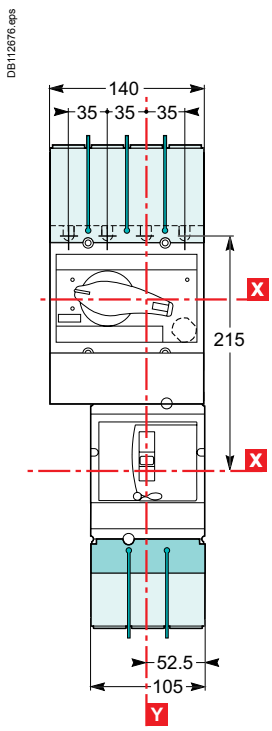

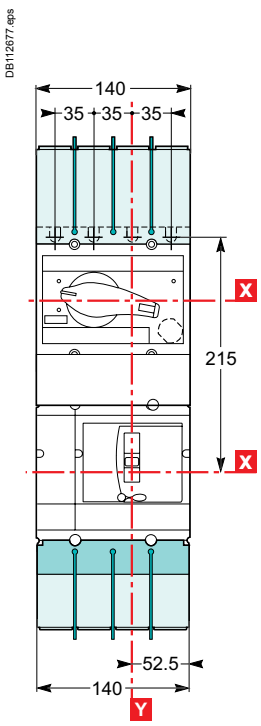

Interphase barriers.
Short terminal shields.
Long terminal shields.

Mounting 3P 4P

On rails or backplate

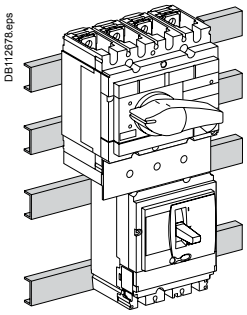

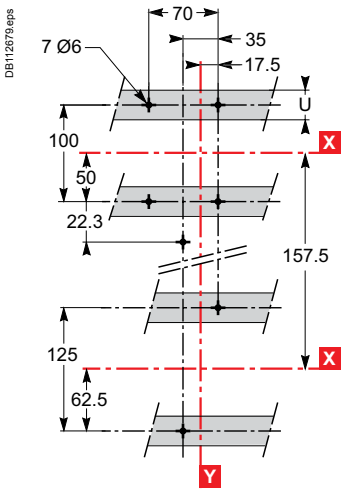

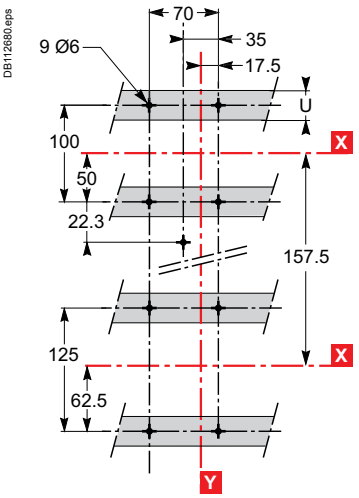

U ⩽ 32

Dimensions and mounting

Visu function for Compact NSX400/630 fixed version

Dimensions - combination with Compact INV400 to 630 — 3P — 4P

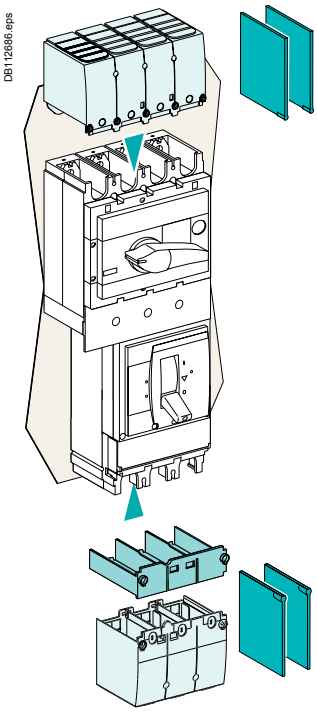

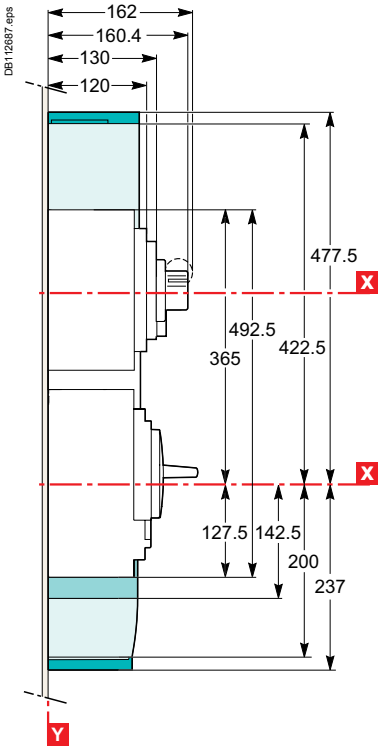

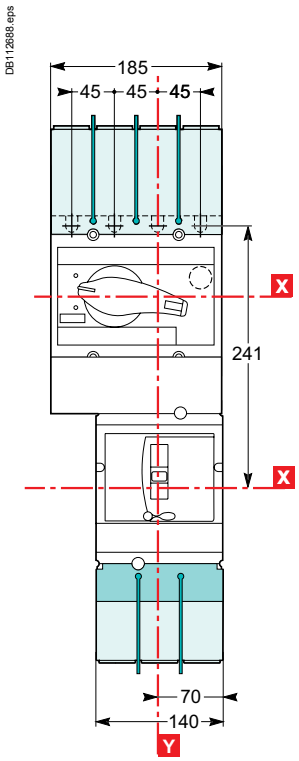

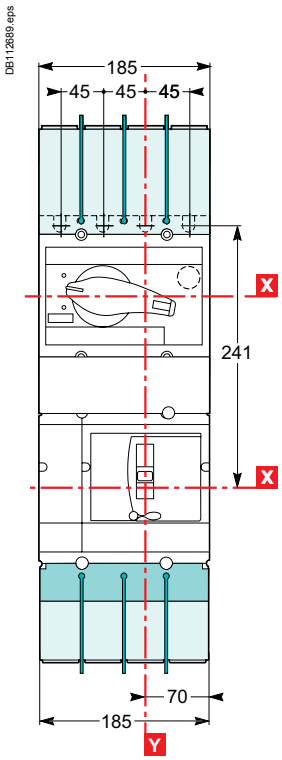

Interphase barriers for base.
Short terminal shields.
Long terminal shields.

Mounting — 3P — 4P

On rails or backplate

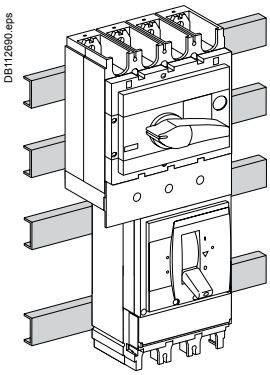

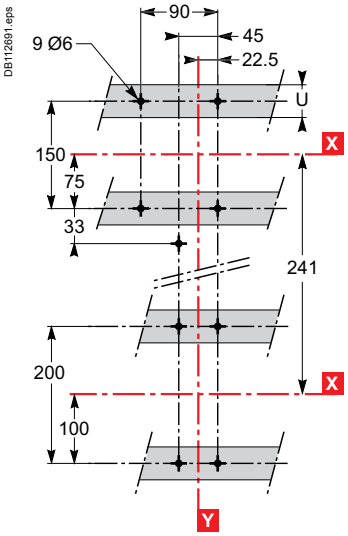

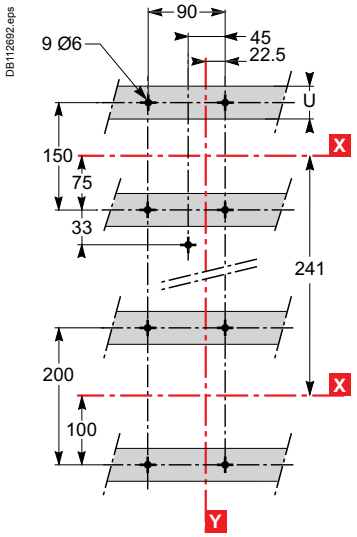

U ⩽ 35

Dimensions

Fixed circuit breaker

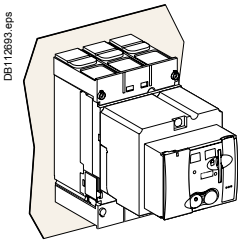

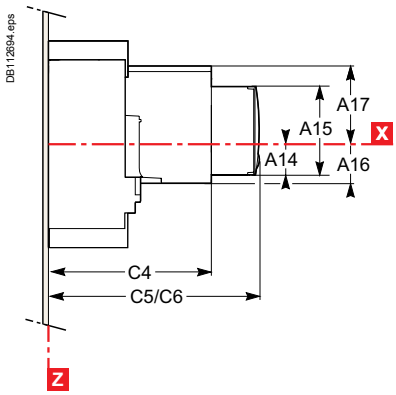

C5: without keylock
C6: with keylock

3P

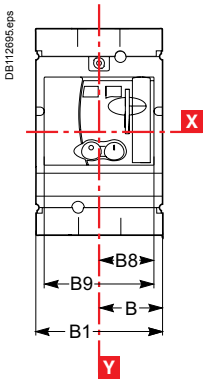

4P

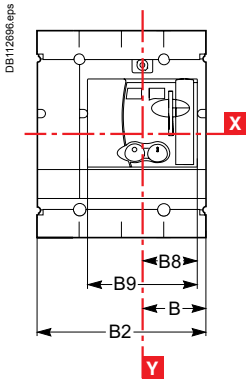

Plug-in circuit breaker

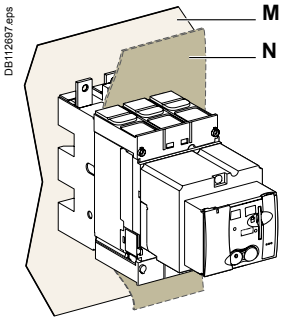

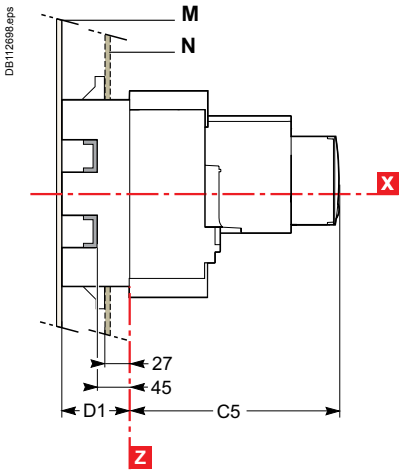

Withdrawable circuit breaker

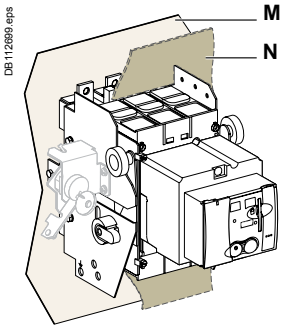

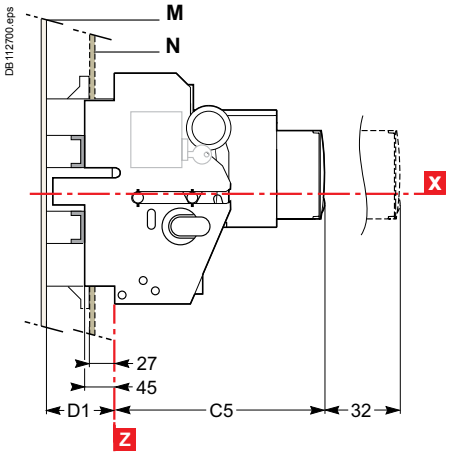

Type	A14	A15	A16	A17	B	B1	B2	B8	B9	C4	C5	C6	D1
NSX100/160/250	27.5	73	34.5	62.5	52.5	105	140	45.5	91	143	182	209.5	75
NSX400/630	40	123	52	100	70	140	185	61.5	123	215	256	258	100

Dimensions and mounting

Direct rotary handle for Compact and Vigicompact NSX100 to 630

Dimensions

3P 4P

Fixed circuit breaker

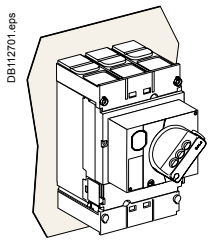

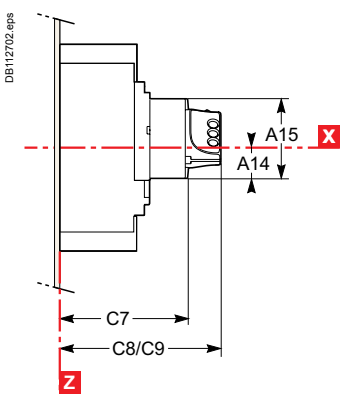

C8: without keylock
C9: with keylock

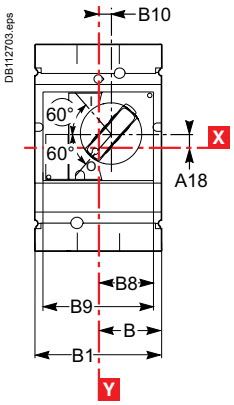

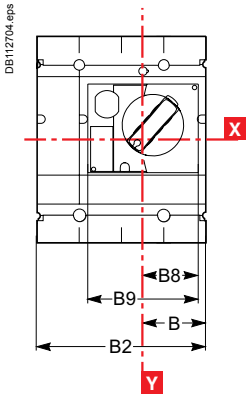

Plug-in circuit breaker

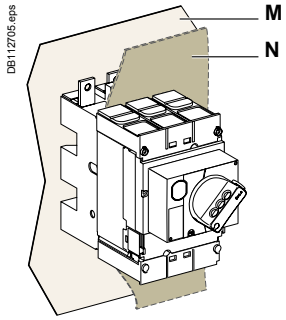

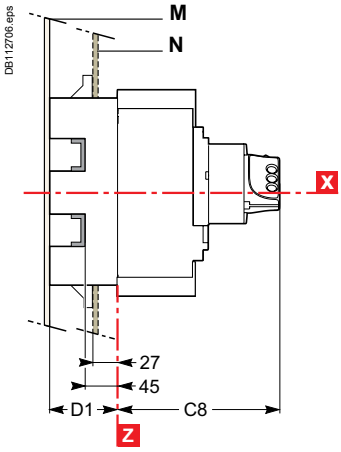

Withdrawable circuit breaker

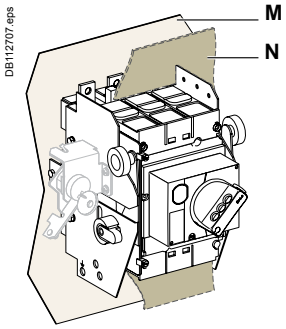

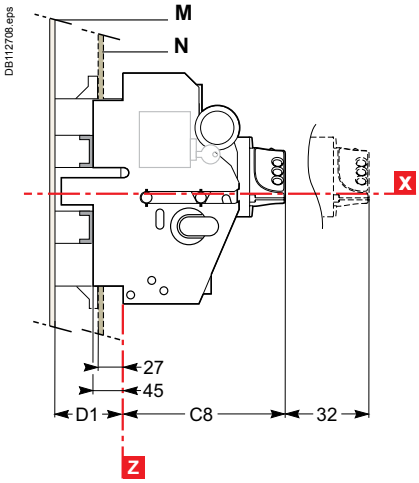

Type	A14	A15	A18	B	B1	B2	B8	B9	B10	C7	C8	C9	D1
NSX100/160/250	27.5	73	9	52.5	105	140	45.5	91	9.25	121	155	164	75
NSX400/630	40	123	24.6	70	140	185	61.5	123	5	145	179	188	100

MCC and CNOMO type direct rotary handles for Compact NSX100 to 630 fixed version

Dimensions

MCC type direct rotary handle

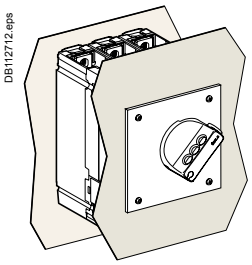

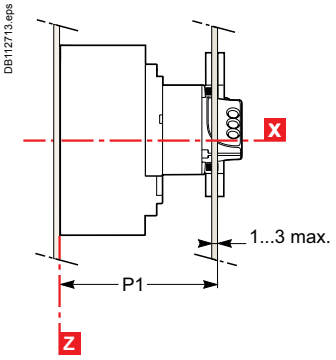

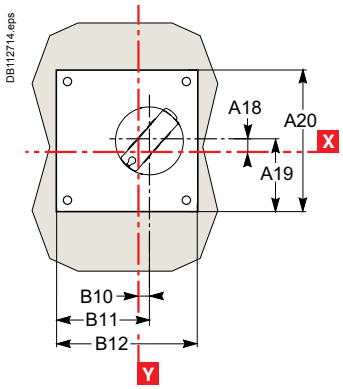

CNOMO type direct rotary handle

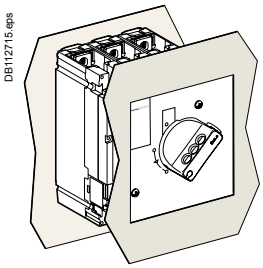

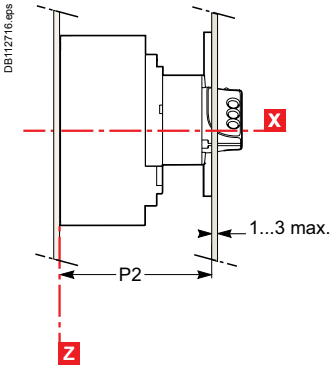

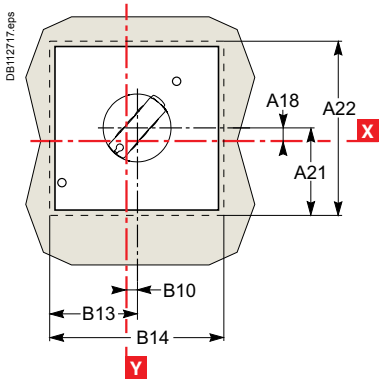

Front-panel cutout NSX100 to 250 NSX400/630

MCC type direct rotary handle

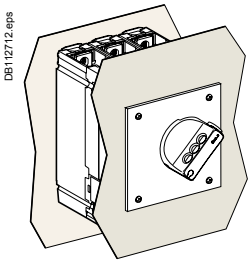

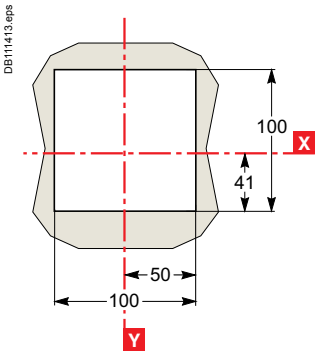

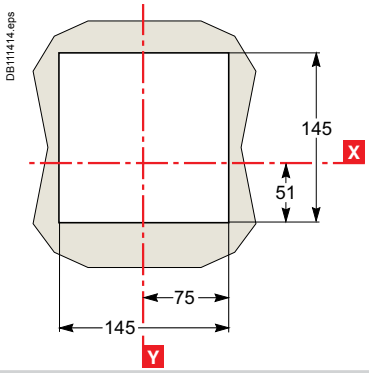

CNOMO type direct rotary handle

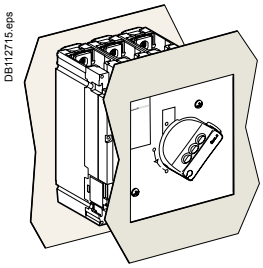

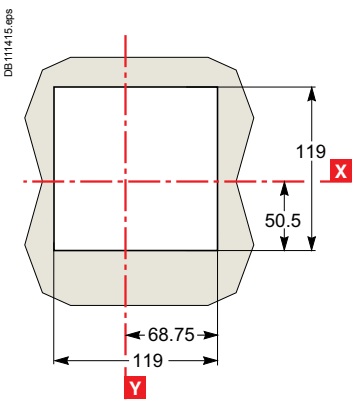

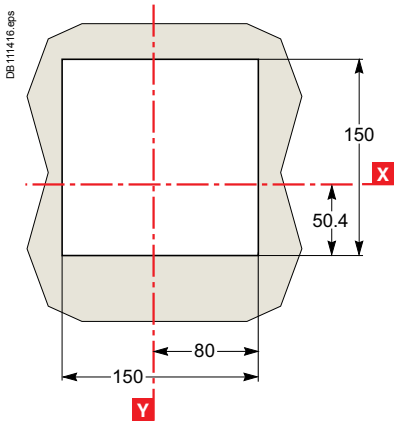

Type	A18	A19	A20	A21	A22	B10
NSX100/160/250	9	60	120	65	130	9.25
NSX400/630	24.6	83	160	82	164	5
Type	**B11**	**B12**	**B13**	**B14**	**P1**	**P2**
NSX100/160/250	69	120	65	130	125	135
NSX400/630	85	160	82	164	149	158

Dimensions and mounting
Extended rotary handle for Compact NSX100 to 630

Dimensions
Fixed and plug-in circuit breakers

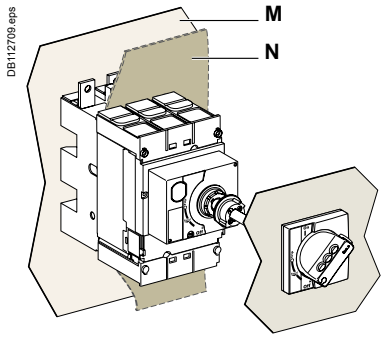

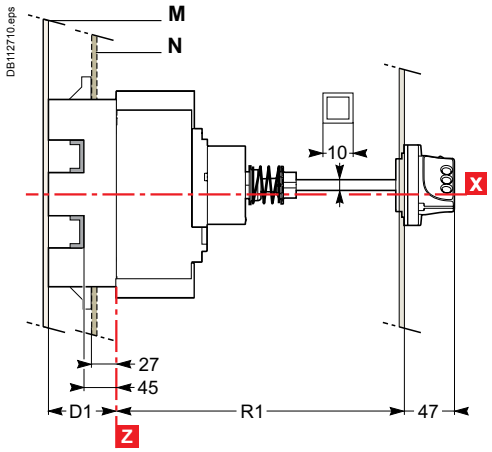

Cutout for shaft (mm)

Type	R1
NSX100/160/250	min. 171 max. 600
NSX400/630	min. 195 max. 600

Withdrawable circuit breaker

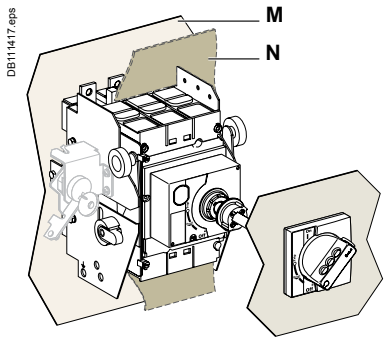

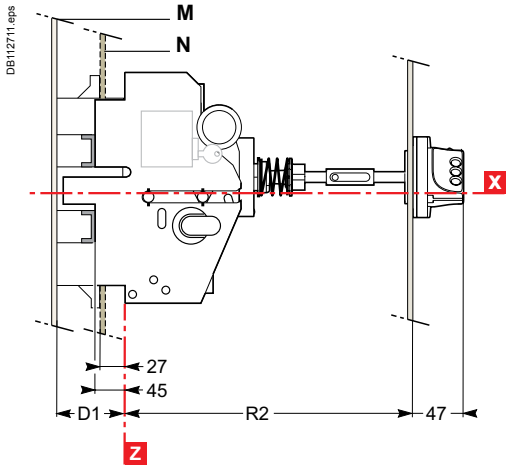

Cutout for shaft (mm)

Type	R2
NSX100/160/250	min. 248 max. 600
NSX400/630	min. 272 max. 600

Dimensions and front-panel cutout

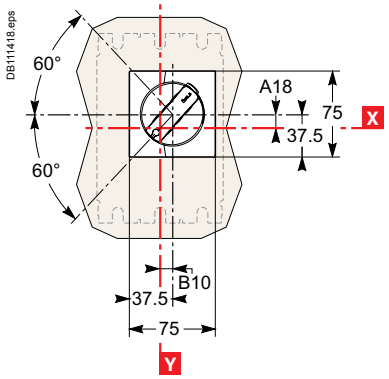

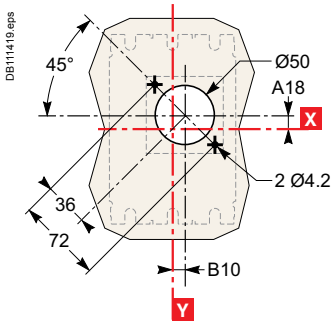

Type	A18	B10	D1
NSX100/160/250	9	9.25	75
NSX400/630	24.6	5	100

Dimensions and mounting

Indication and measurement modules for Compact NSX100 to 630 fixed version

Dimensions

Circuit breaker with ammeter module

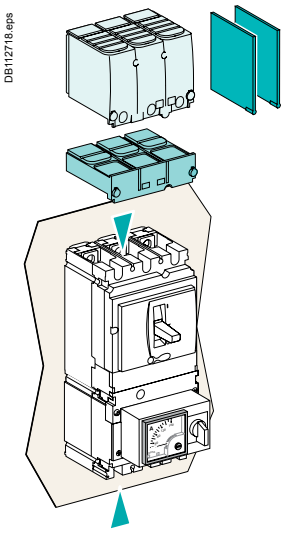

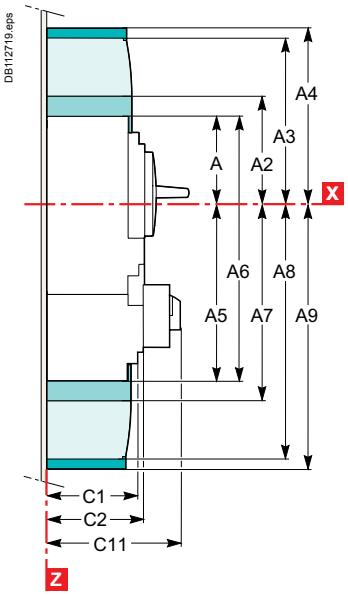

Interphase barriers.
Short terminal shields.
Long terminal shields.

Circuit breaker with current-transformer module

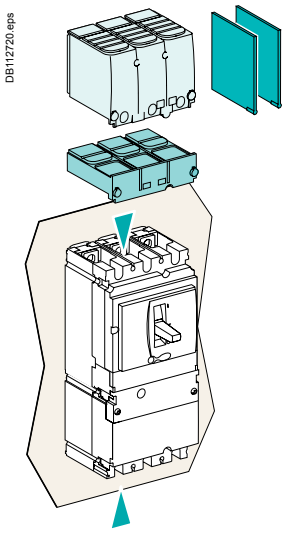

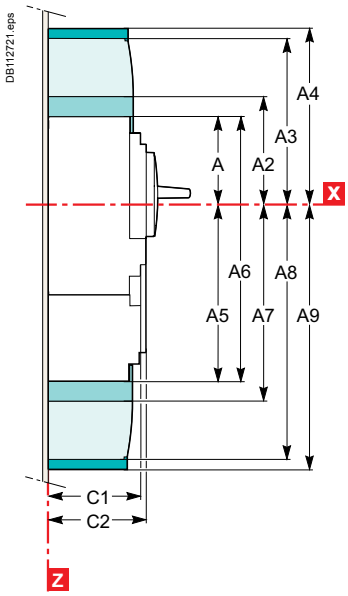

Mounting

	NSX100 to 250	NSX400/630	NSX100 to 630
On backplate	**2/3P**	**3P**	**4P**

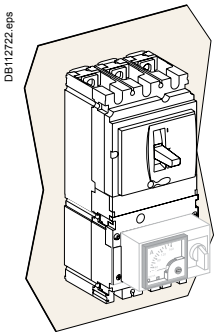

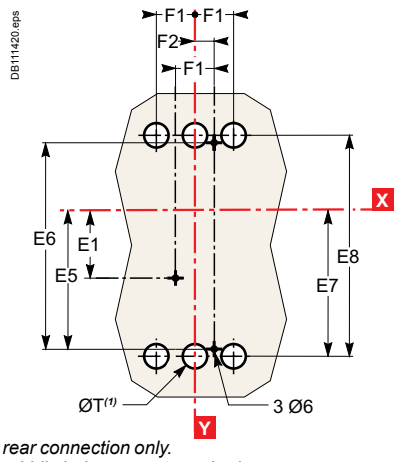

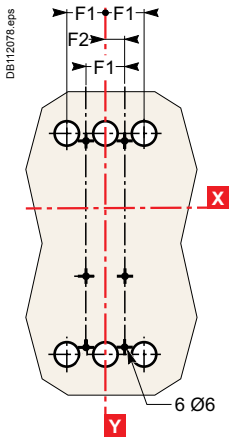

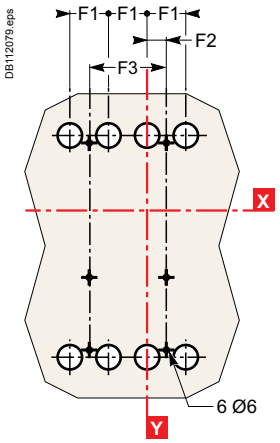

(1) The ØT holes are required for rear connection only.
For two-pole circuit breakers, the middle holes are not required.

	2/3P	3P	4P
On rails			

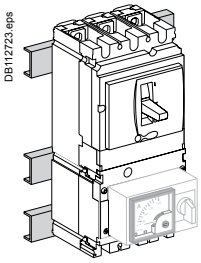

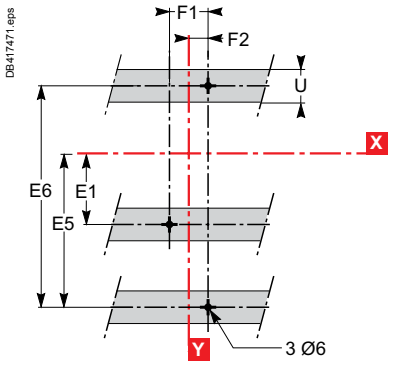

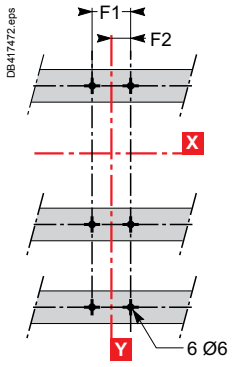

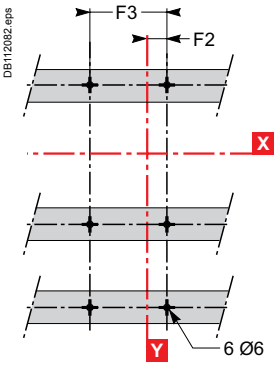

Type	A	A2	A3	A4	A5	A6	A7	A8	A9	C1	C2	C11	E1	E5	E6	E7	E8
NSX100/160/250	80.5	94	145	178.5	155.5	236	169	220	253.5	81	86	137	62.5	137.5	200	145	215
NSX400/630	127.5	142.5	200	237	227.5	355	242.5	300	337	95.5	110	162	100	200	300	213.5	327

Type	F1	F2	F3	ØT	U
NSX100/160/250	35	17.5	70	24	≤ 32
NSX400/630	45	22.5	90	32	≤ 35

Dimensions and mounting

One-piece spreader for Compact NSX100 to 250 fixed version

Dimensions

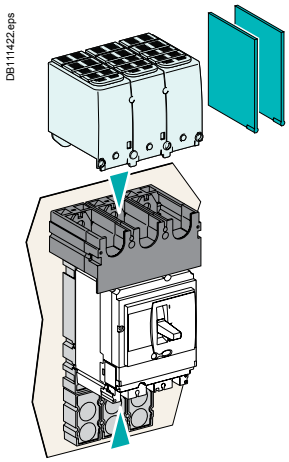

Rear alignment

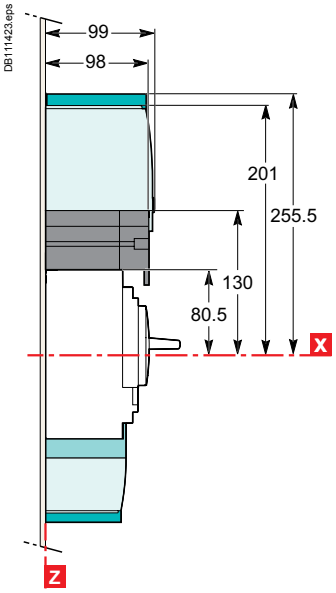

Front alignment

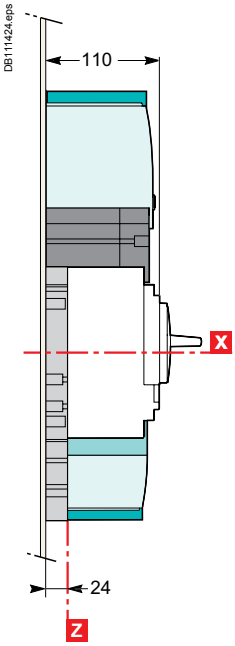

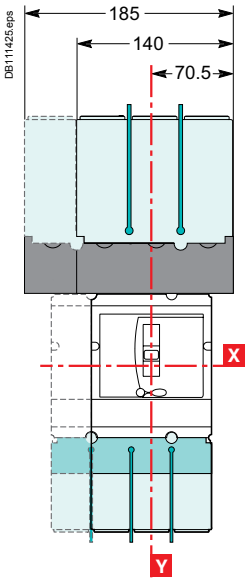

Interphase barriers.
Short terminal shields.
Long terminal shields.

Mounting

Rear alignment

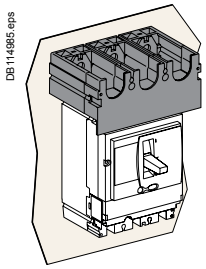

2/3P

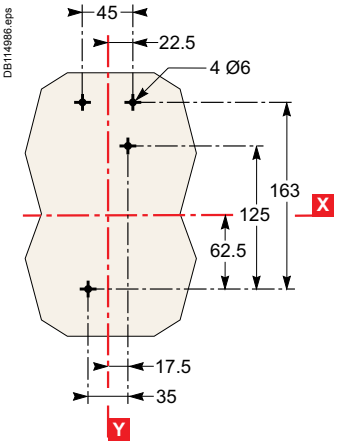

4P

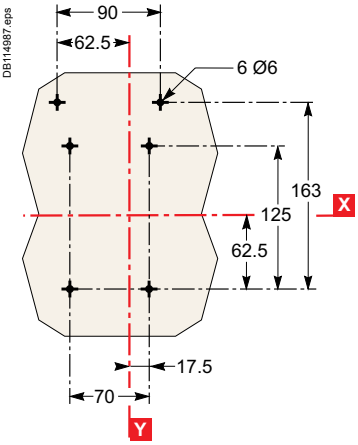

Front alignment

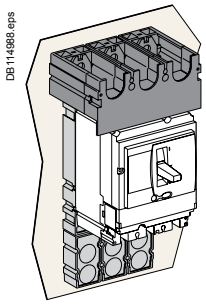

2/3P

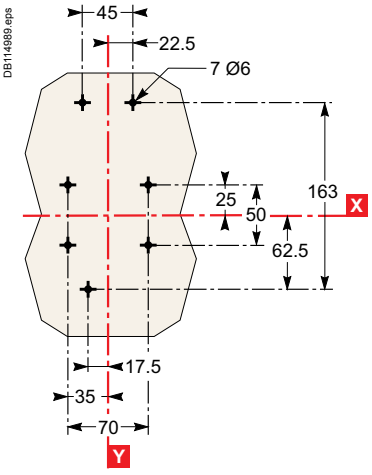

4P

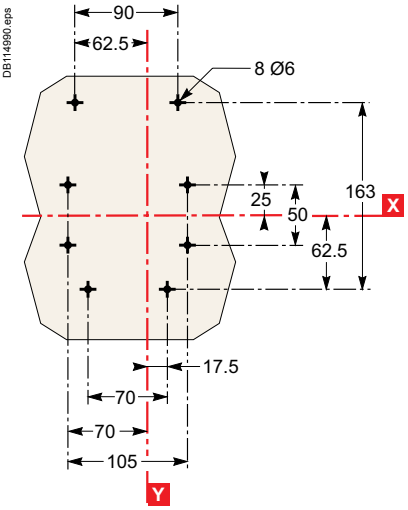

Dimensions and mounting
External modules

I/O (Input/Output) application module

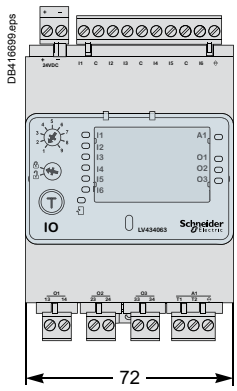

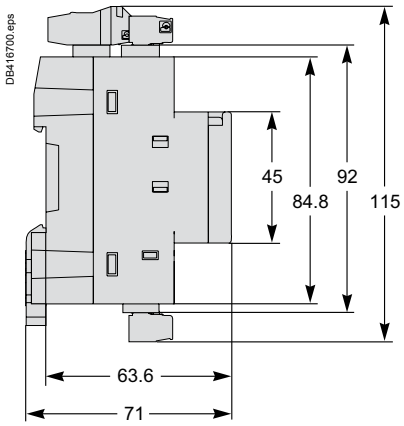

IFM - Modbus-SL interface

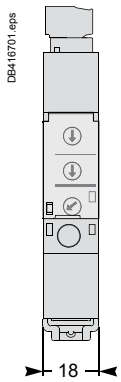

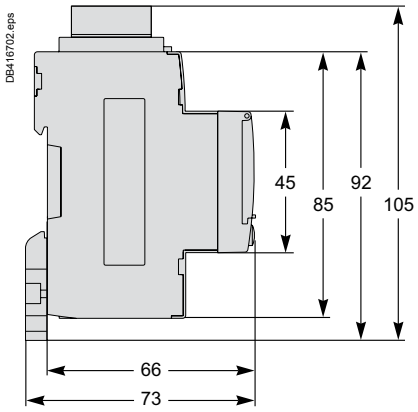

IFE - Ethernet interface

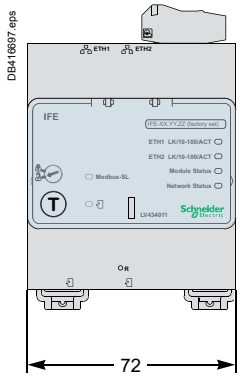

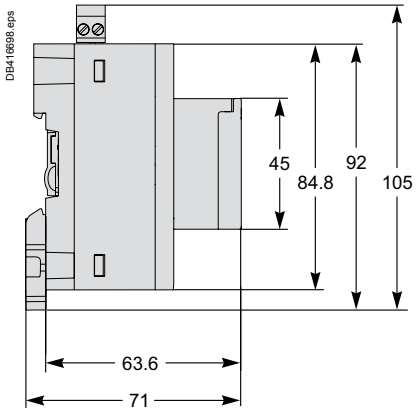

Com'X 200

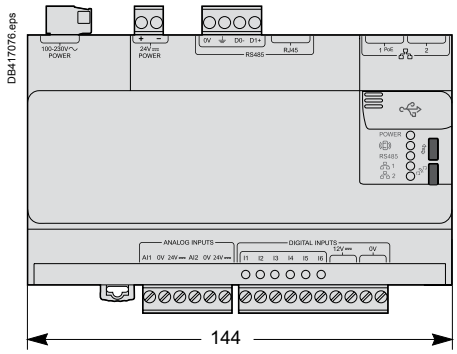

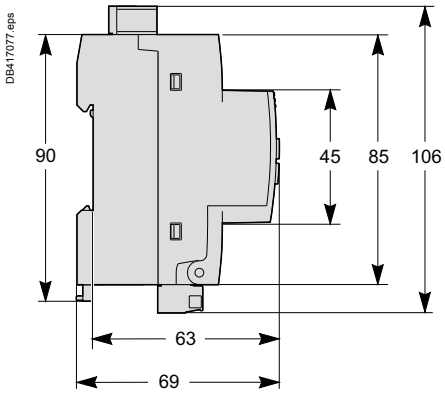

Dimensions

DB114991.eps

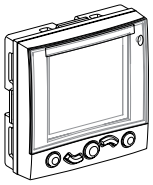

DB114992.eps

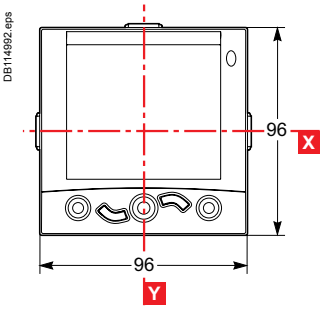

Mounting

Through panel

DB114993.eps

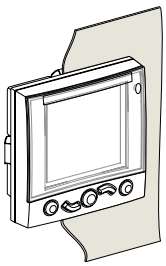

DB416963.eps

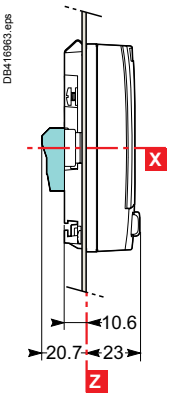

DB118545.eps

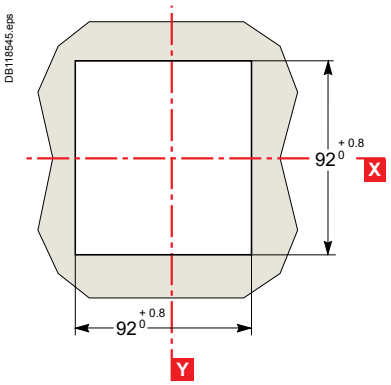

On panel

DB114996.eps

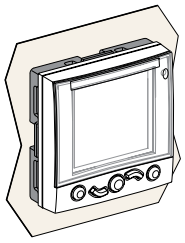

DB115270.eps

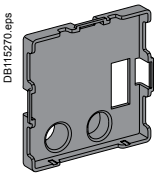

DB115121.eps

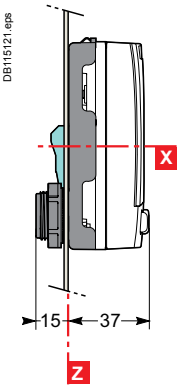

DB115122.eps

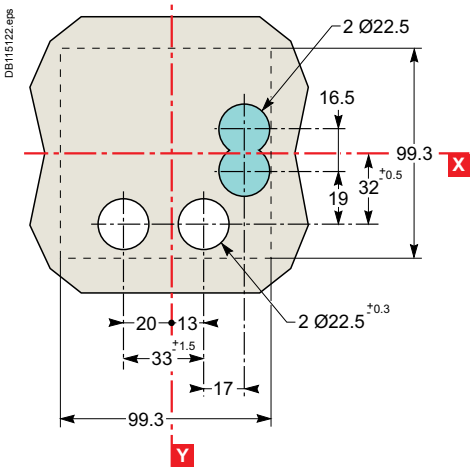

Connector (optional).

Dimensions and mounting
FDM128 switchboard display

Dimensions

DB416703.eps

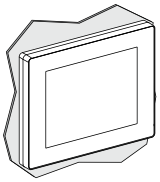

DB416736.eps

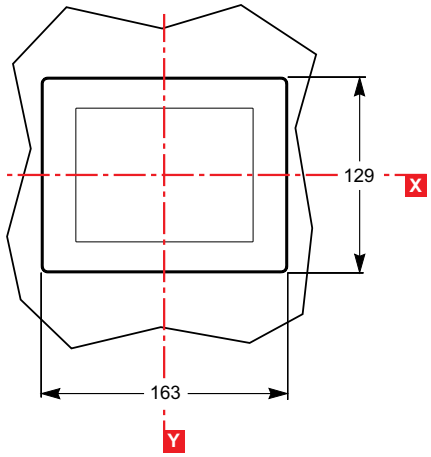

Mounting

On panel

DB416704.eps

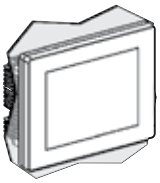

DB416737.eps

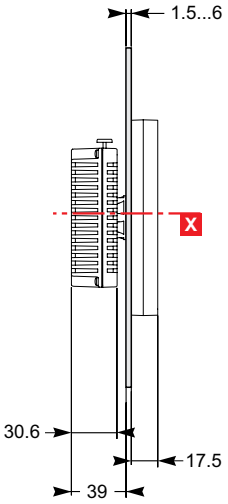

DB416738.eps

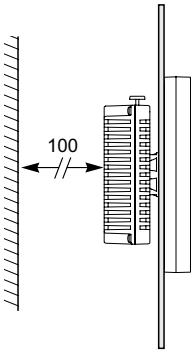

DB416739.eps

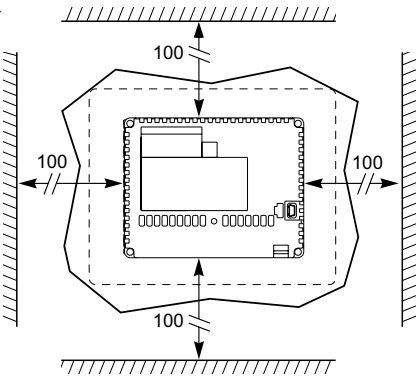

DB416740.eps

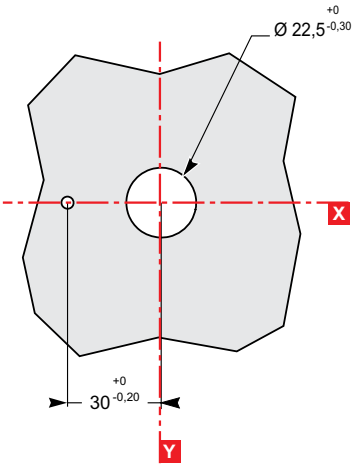

IP30 front-panel escutcheons

For toggle, rotary handle or motor mechanism module

DB114997.eps

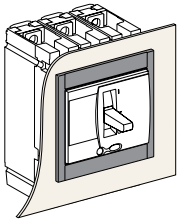

DB114998.eps

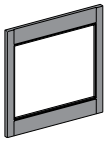

DB114999.eps

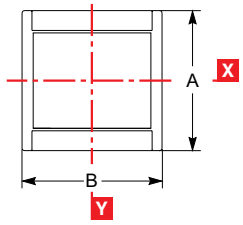

DB115000.eps

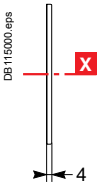

For toggle or rotary handle with access to trip unit

DB115001.eps

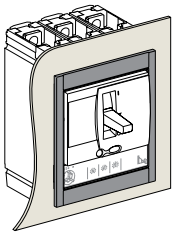

DB115002.eps

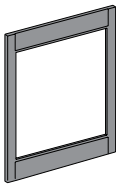

DB115003.eps

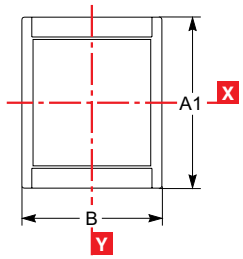

DB115004.eps

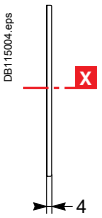

For Vigicompact

DB115005.eps

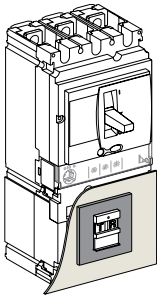

DB115006.eps

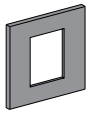

DB115007.eps

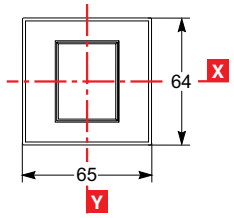

DB115008.eps

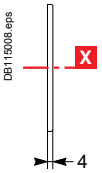

IP40 front-panel escutcheons

For toggle, rotary handle or motor mechanism module and protection collar

DB115064.eps

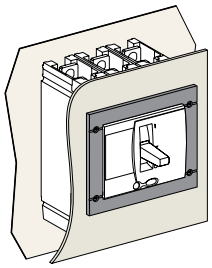

DB115010.eps

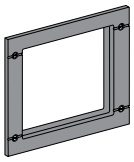

DB115011.eps

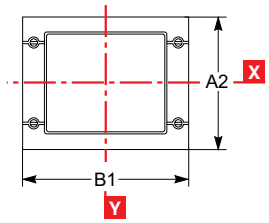

DB115012.eps

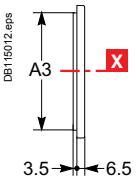

For Vigicompact with protection collar or ammeter module

DB115013.eps

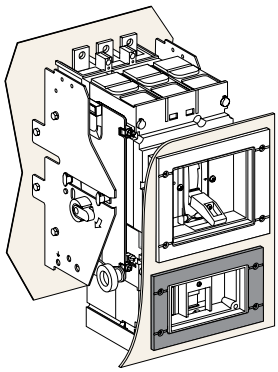

DB115014.eps

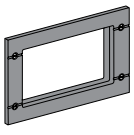

DB115015.eps

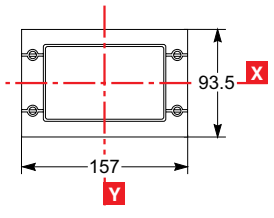

DB115016.eps

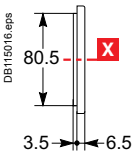

Front-panel accessories
Compact NSX100 to 630

IP40 front-panel escutcheons (cont.)

For Vigicompact

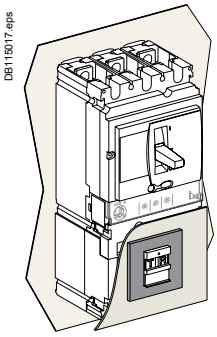

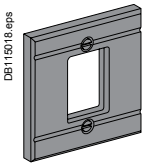

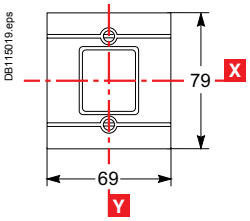

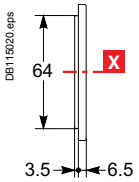

Protection collars for IP40 front-panel escutcheons

For toggle

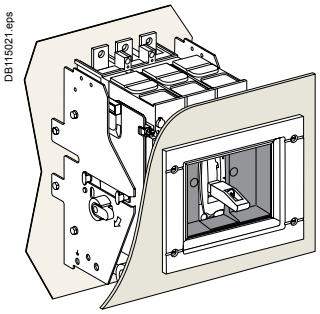

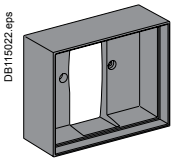

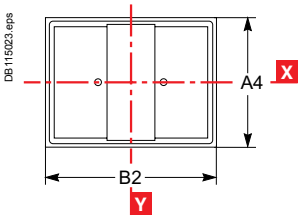

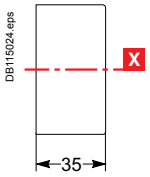

For Vigicompact

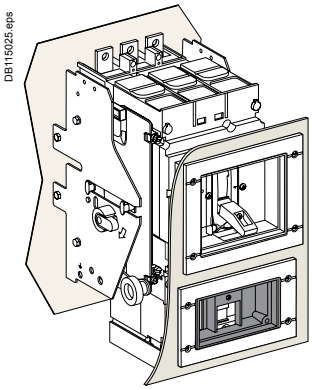

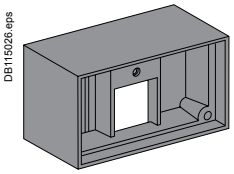

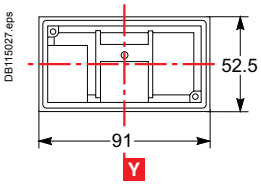

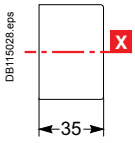

Circuit breaker with toggle or rotary handle.

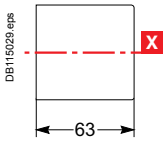

Circuit breaker with motor-mechanism module.

IP43 toggle cover

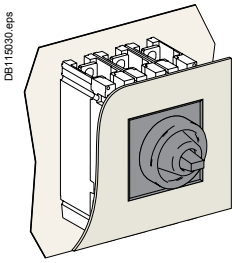

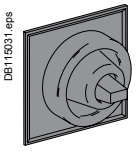

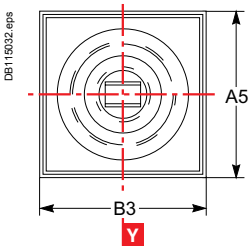

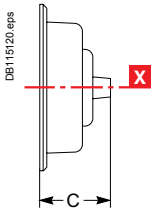

Type	A	A1	A2	A3	A4	A5	B	B1	B2	B3	C
NSX100/160/250	113	138	114	101	73	85	113	157	91	103	40
NSX400/630	163	211	164	151	122.5	138	163	189	122.5	138	60

Front-panel cutouts
Compact NSX100 to 630 fixed version

Bare sheet metal

	NSX100 to 250	NSX400/630

For toggle

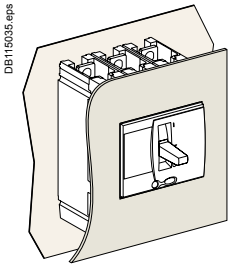

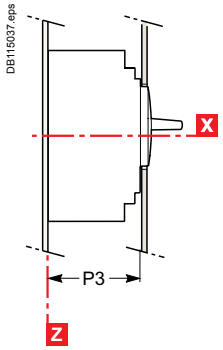

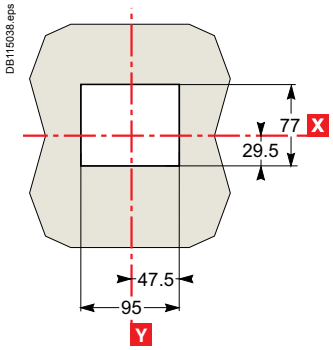

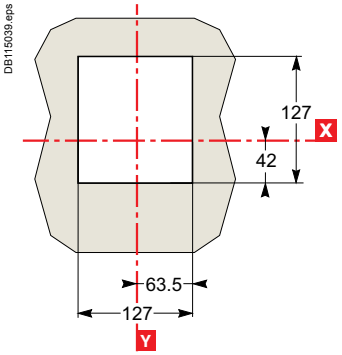

For toggle with access to trip unit

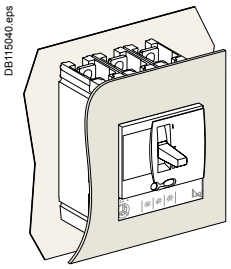

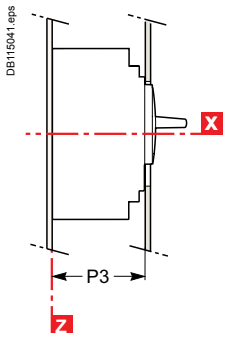

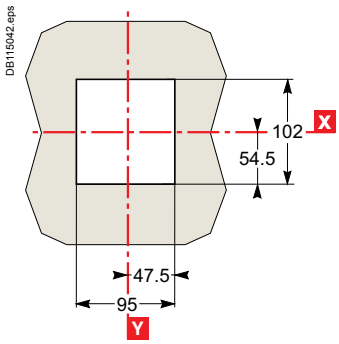

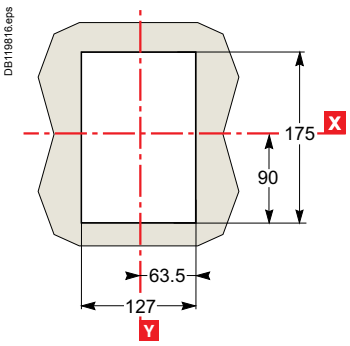

With IP30 front-panel escutcheon

	NSX100 to 250	NSX400/630

For toggle

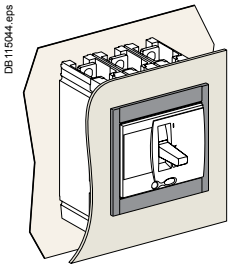

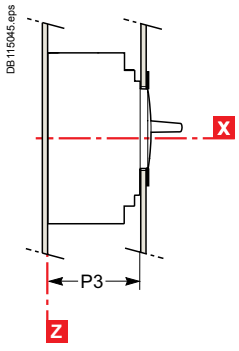

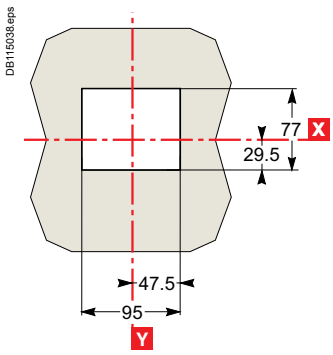

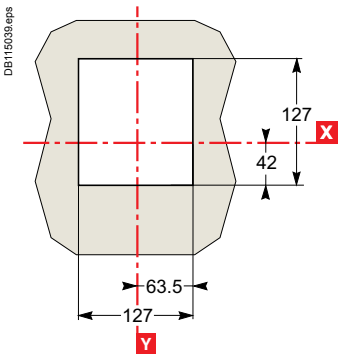

For toggle with access to trip unit

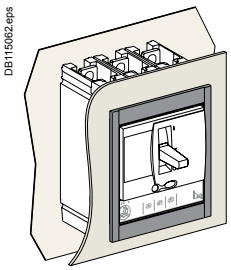

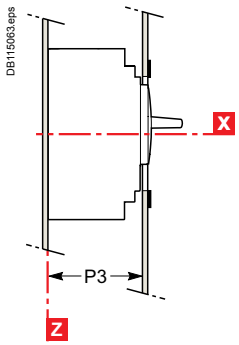

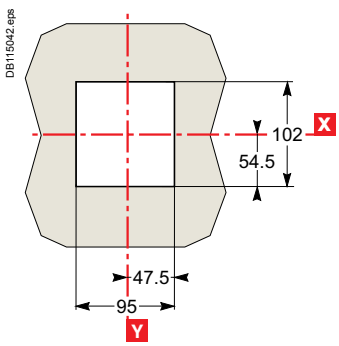

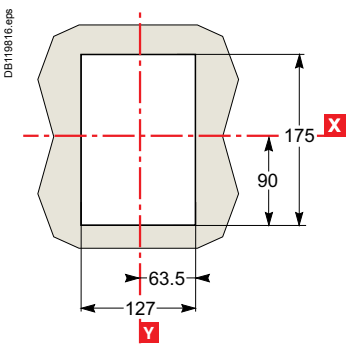

With IP40 front-panel escutcheon — NSX100 to 250 — NSX400/630

For toggle

DB115064.eps

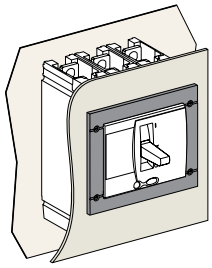

DB115065.eps

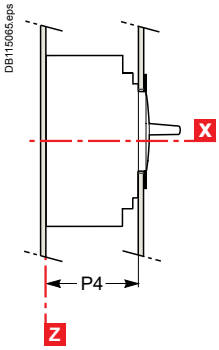

DB115066.eps

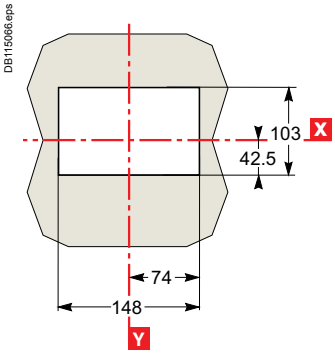

DB115067.eps

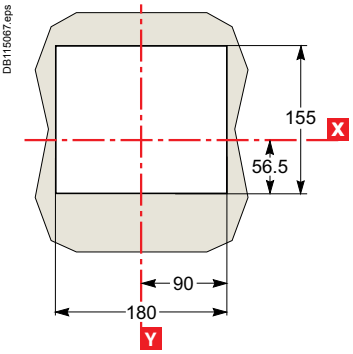

With IP43 toggle cover — NSX100 to 250 — NSX400/630

For toggle

DB115068.eps

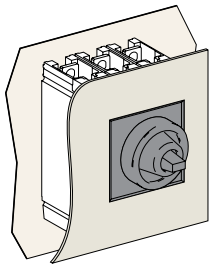

DB115123.eps

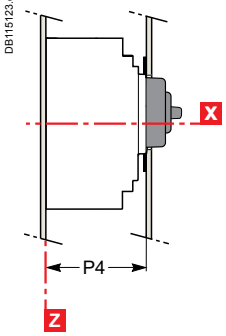

DB115038.eps

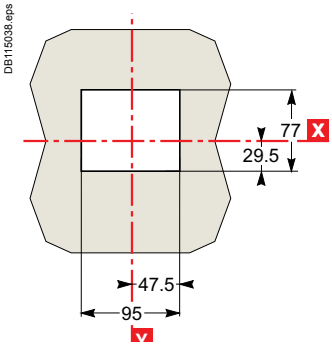

DB115039.eps

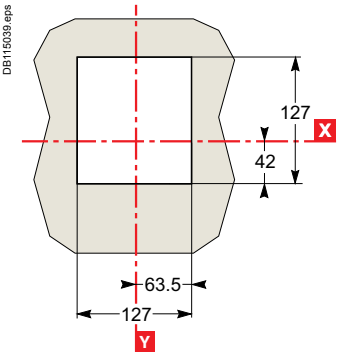

Type	P3	P4
NSX100/160/250	88	89
NSX400/630	112	113

Note: door cutout dimensions are given for a device position in the enclosure where Δ ≥ 100 + (h x 5) with respect to the door hinge.

DB115439.eps

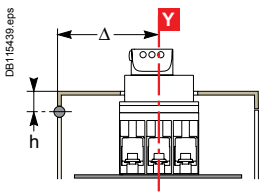

Front-panel cutouts

Vigicompact NSX100 to 630 fixed version

Bare sheet metal	NSX100 to 250	NSX400/630

For toggle

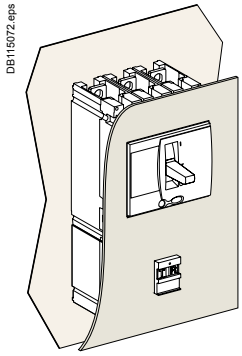

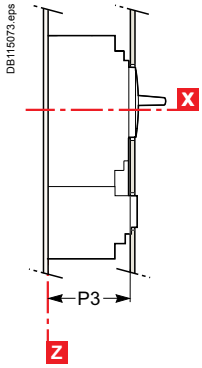

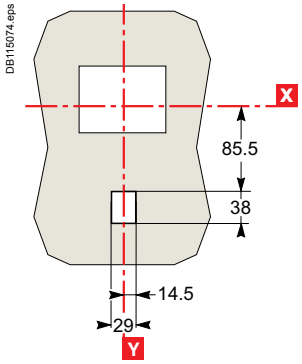

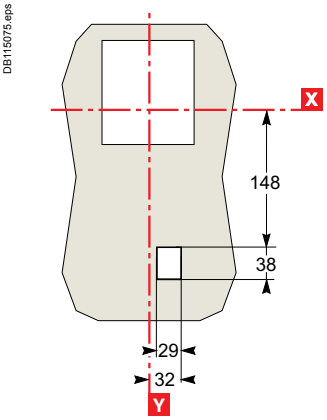

For toggle with access to trip unit

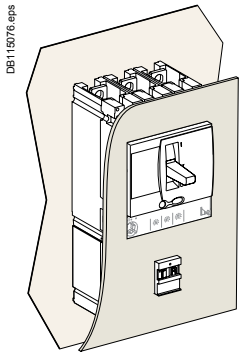

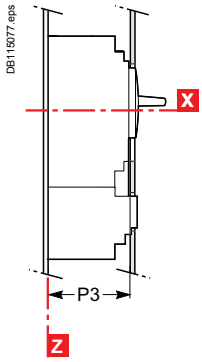

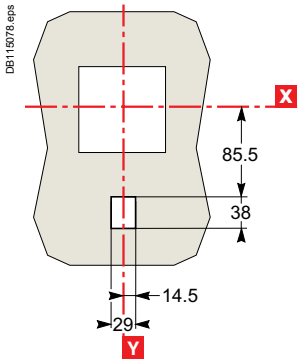

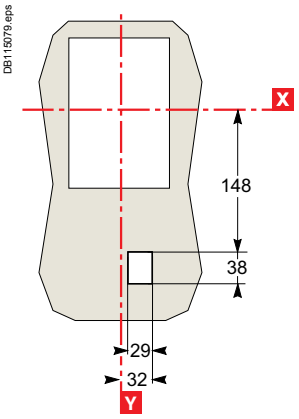

With IP30 front-panel escutcheon	NSX100 to 250	NSX400/630

For toggle

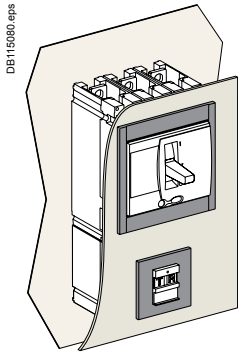

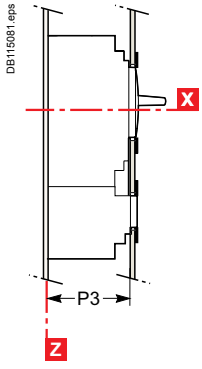

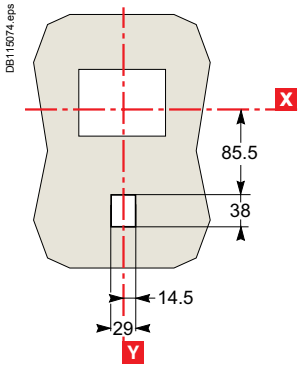

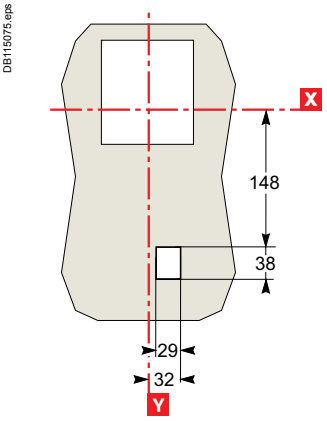

With IP30 front-panel escutcheon (cont.) NSX100 to 250 NSX400/630

For toggle with access to trip unit

DB115082.eps

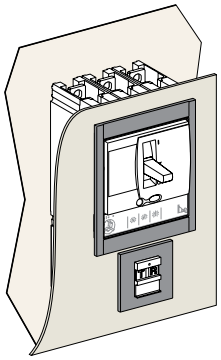

DB115083.eps

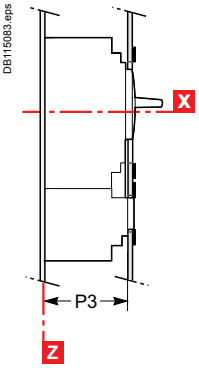

DB115078.eps

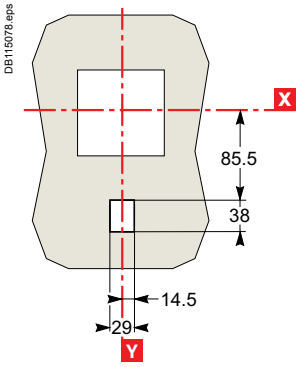

DB115079.eps

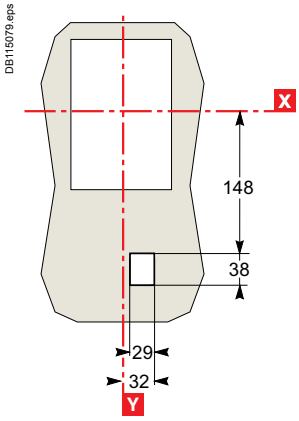

With IP40 front-panel escutcheon NSX100 to 250 NSX400/630

For toggle

DB115084.eps

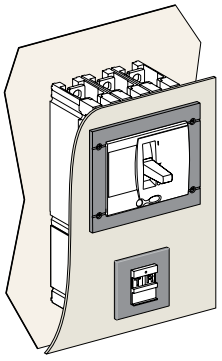

DB115085.eps

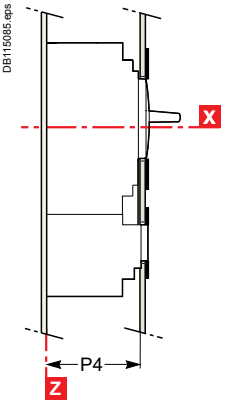

DB115086.eps

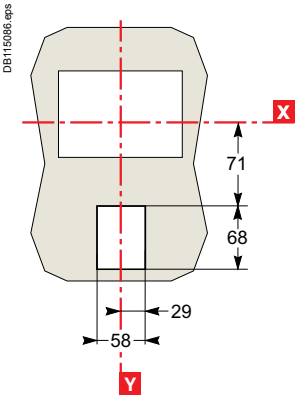

DB115087.eps

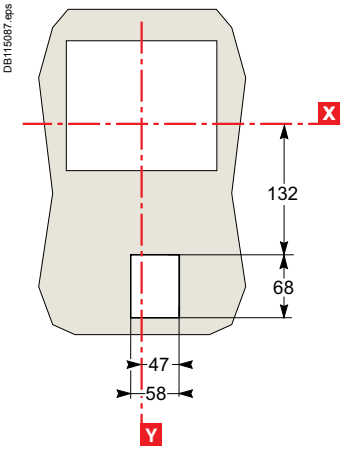

Type	P3	P4
NSX100/160/250	88	89
NSX400/630	112	113

Note: door cutout dimensions are given for a device position in the enclosure where Δ ≥ 100 + (h x 5) with respect to the door hinge.

DB115439.eps

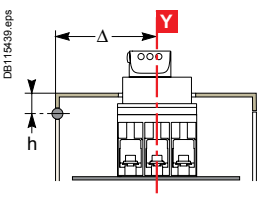

Front-panel cutouts
Compact NSX100 to 630 plug-in and withdrawable versions

Plug-in version

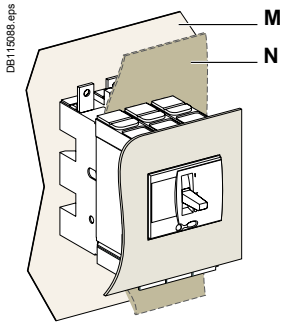

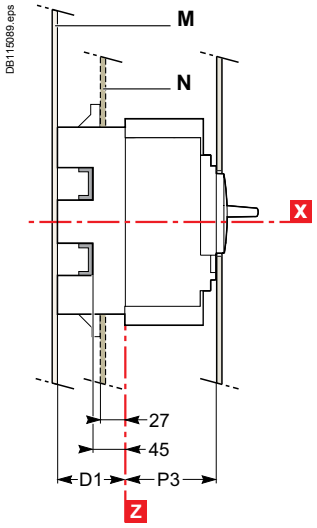

Bare sheet metal

See Compact NSX100 to 630 fixed version, page C-24

With IP30 front-panel escutcheon

See Compact NSX100 to 630 fixed version, page C-24

With IP40 front-panel escutcheon

See Compact NSX100 to 630 fixed version, page C-25

With toggle cover

See Compact NSX100 to 630 fixed version, page C-25

Withdrawable version

With protection collar and IP40 front-panel escutcheon

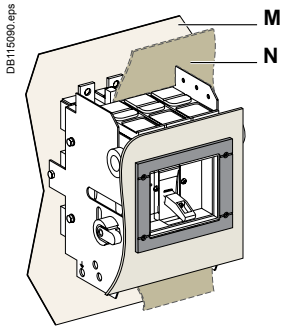

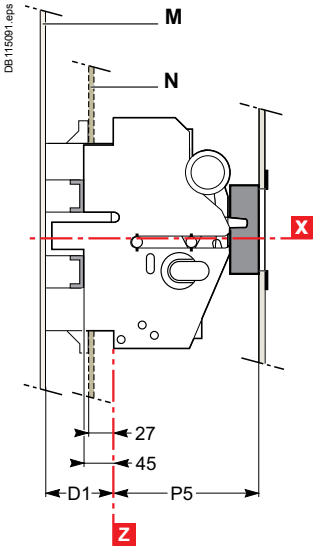

NSX100 to 250

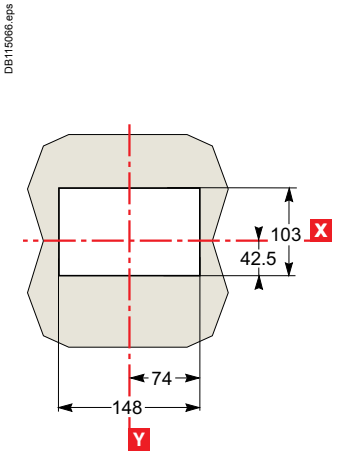

NSX400/630

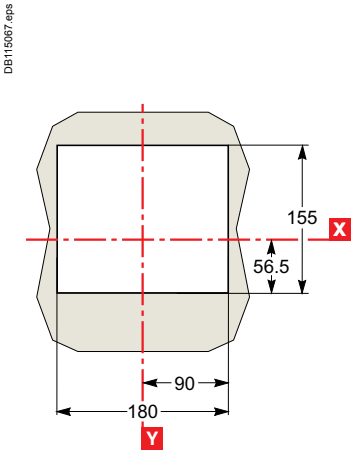

Plug-in version

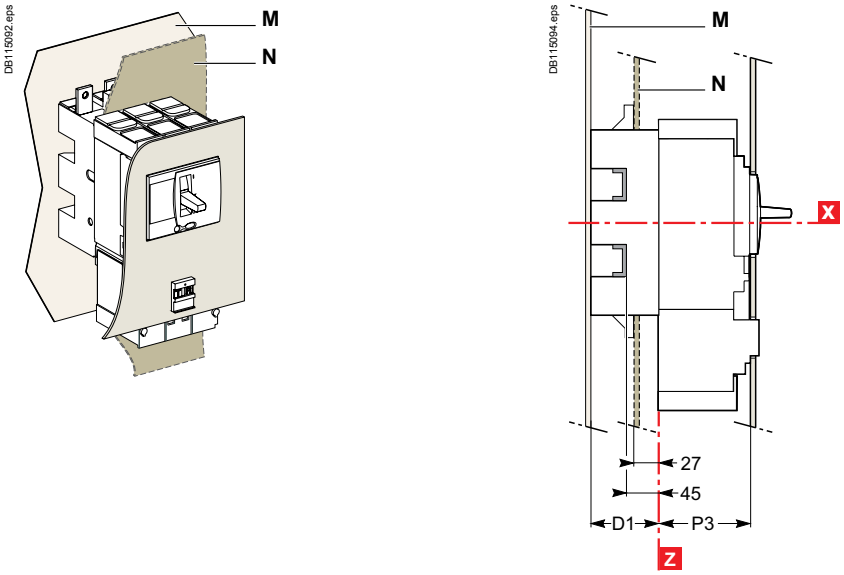

Bare sheet metal

See Compact NSX100 to 630 fixed version, page C-26

With IP30 front-panel escutcheon

See Compact NSX100 to 630 fixed version, page C-26

With IP40 front-panel escutcheon

See Compact NSX100 to 630 fixed version, page C-27

Withdrawable version — NSX100 to 250 — NSX400/630

With protection collar and IP40 front-panel escutcheon

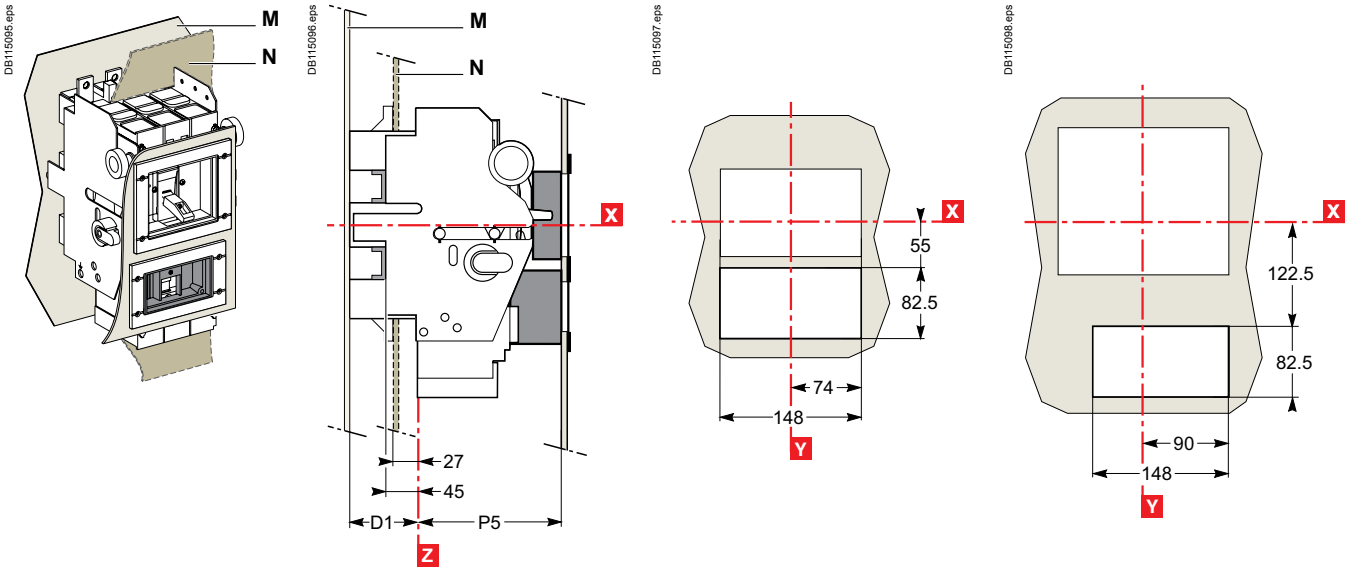

Type	D1	P3	P5
NSX100/160/250	75	88	123
NSX400/630	100	112	147

Note: door cutout dimensions are given for a device position in the enclosure where Δ ≥ 100 + (h x 5) with respect to the door hinge.

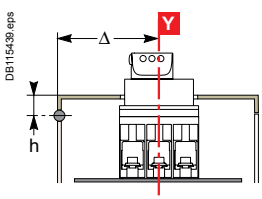

Front-panel cutouts

Visu function for Compact NSX100 to 630 fixed version

Compact NSX100 to 250 with Compact INV100 to 250 Visu function

Bare sheet metal

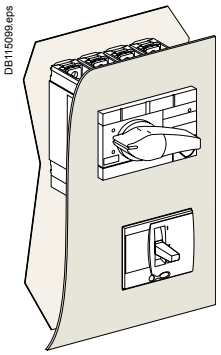

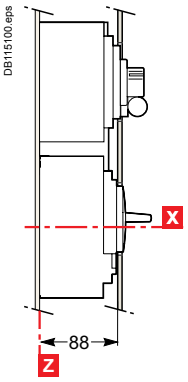

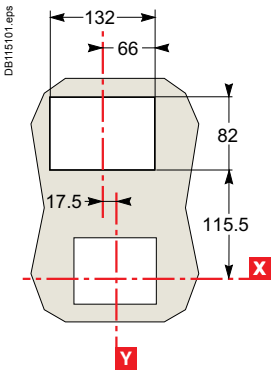

With IP40 front-panel escutcheon

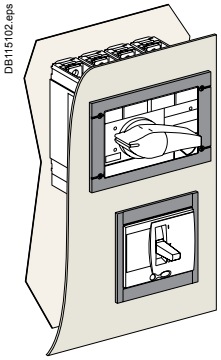

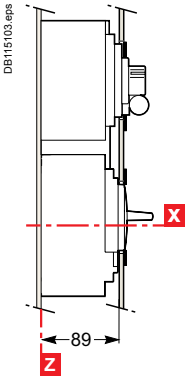

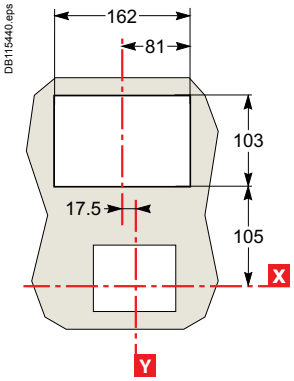

Compact NSX400/630 with Compact INV400 to 630 Visu function

Bare sheet metal

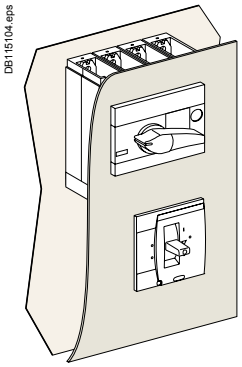

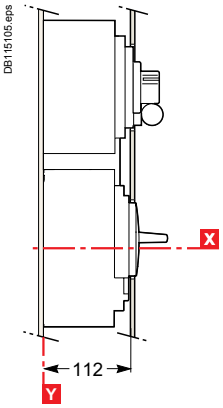

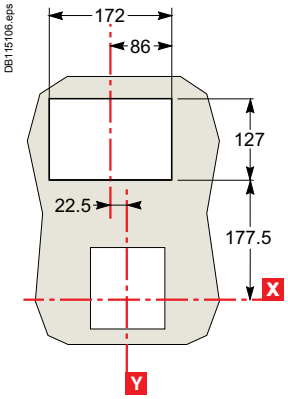

With IP40 front-panel escutcheon

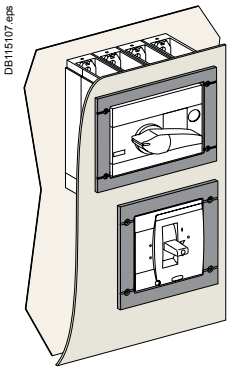

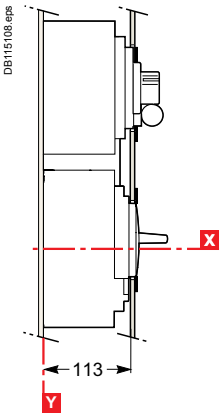

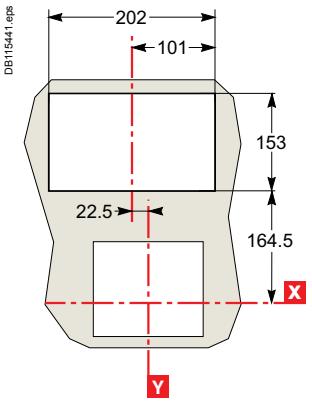

Bare sheet metal — NSX100 to 250 — NSX400/630

Fixed, plug-in or withdrawable circuit breaker

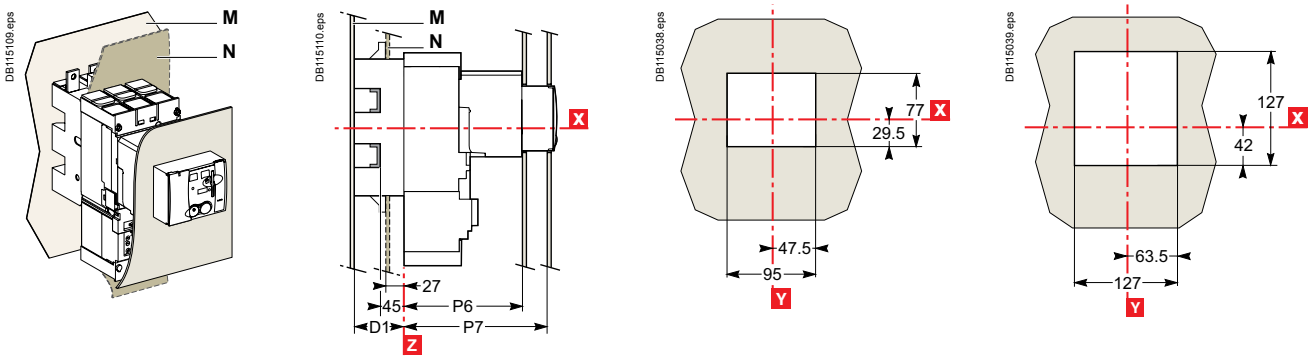

With IP30 front-panel escutcheon — NSX100 to 250 — NSX400/630

Fixed, plug-in or withdrawable circuit breaker

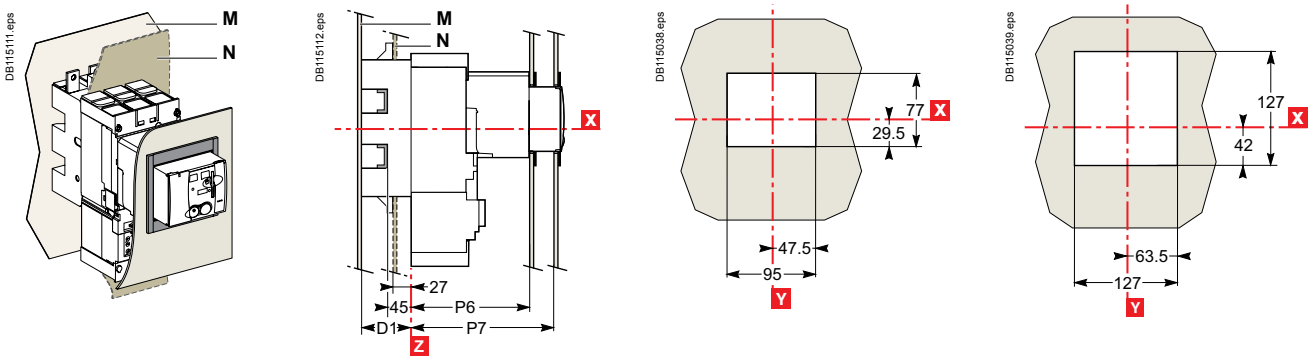

With IP40 front-panel escutcheon — NSX100 to 250 — NSX400/630

Fixed, plug-in or withdrawable circuit breaker without access to Vigi module

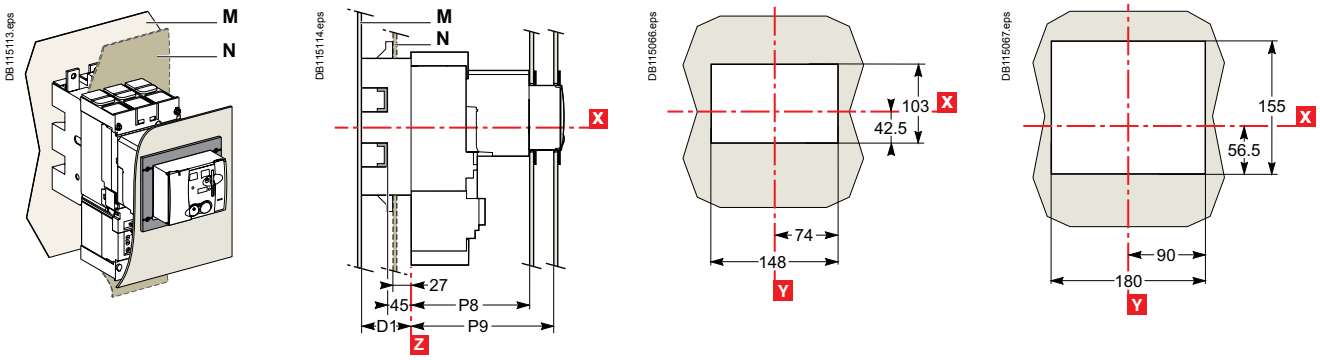

Fixed or plug-in circuit breaker with access to Vigi module

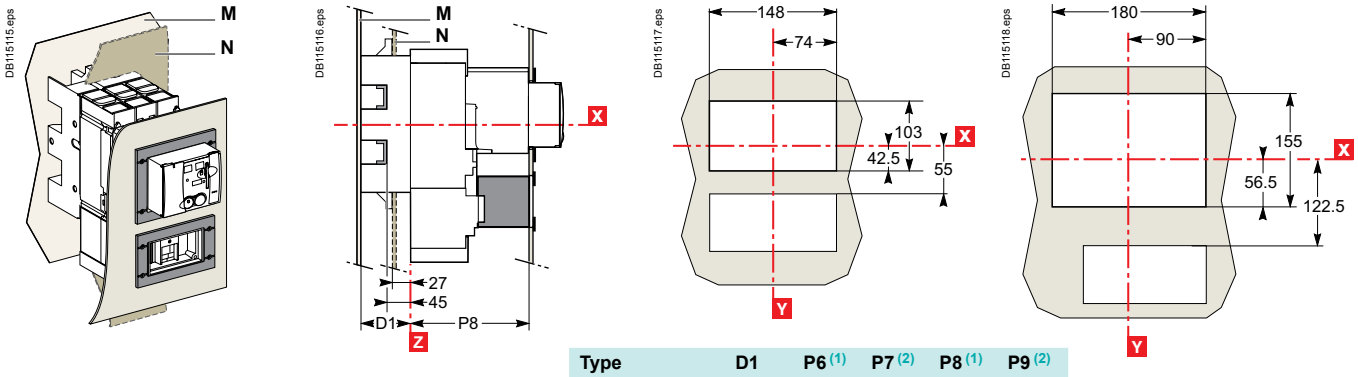

Type	D1	P6 (1)	P7 (2)	P8 (1)	P9 (2)
NSX100/160/250	75	145	177	146	178
NSX400/630	100	217	249	218	250

(1) Plug-in version.

(2) Withdrawable version.

Front-panel cutouts

Direct rotary handle for Compact and Vigicompact NSX100 to 630

Fixed or plug-in circuit breakers	NSX100 to 250	NSX400/630

Bare sheet metal

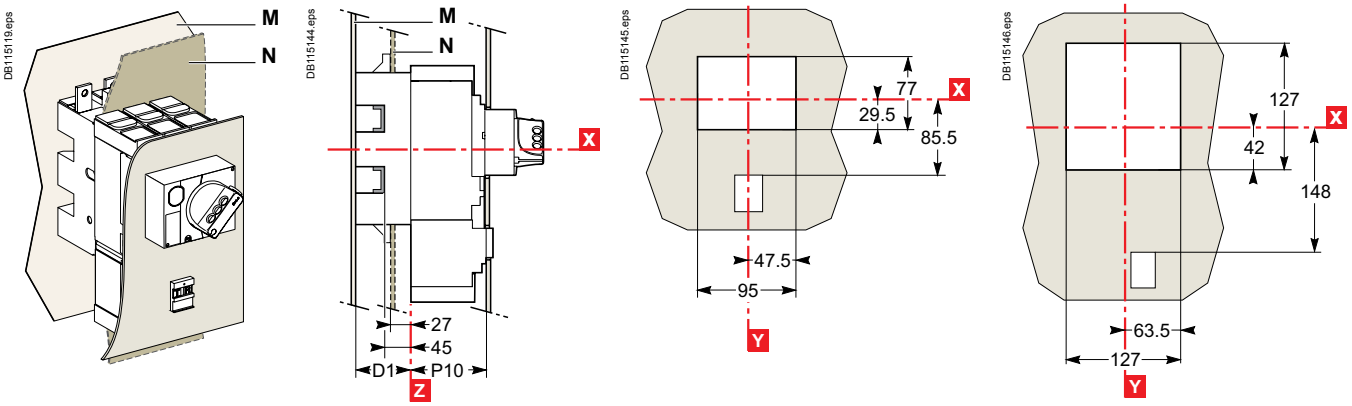

Bare sheet metal with access to the trip unit

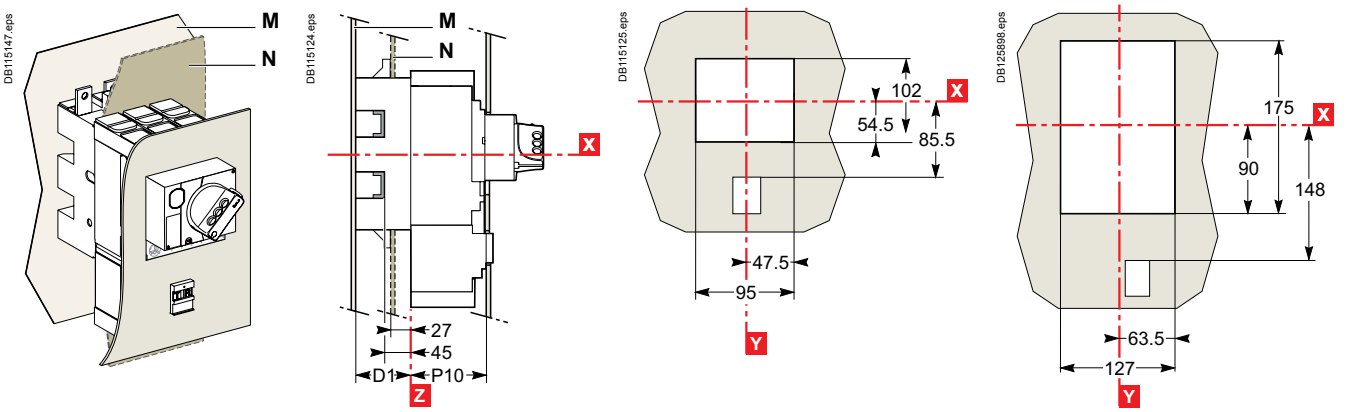

With IP30 front-panel escutcheon

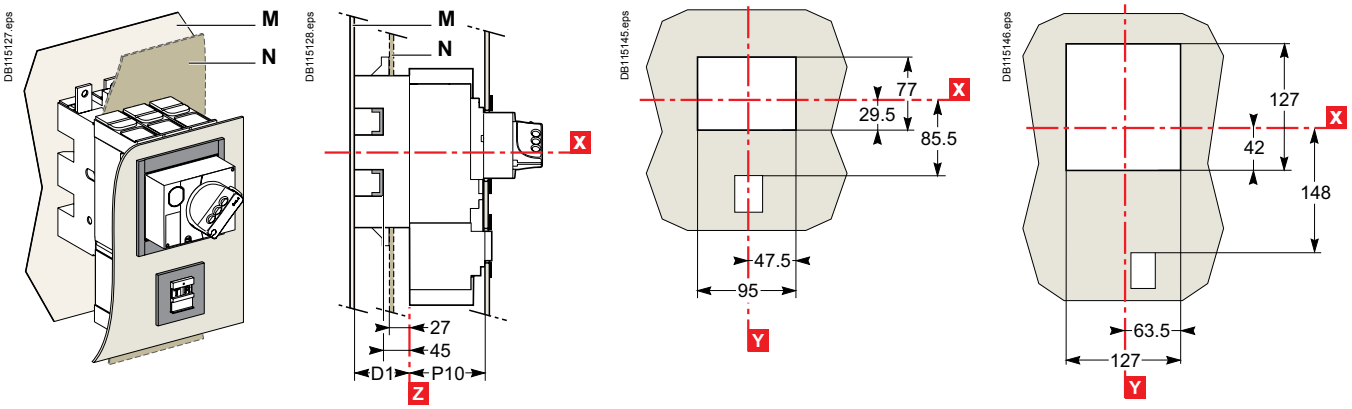

Fixed or plug-in circuit breakers (cont.) NSX100 to 250 NSX400/630

With IP30 front-panel escutcheon with access to the trip unit

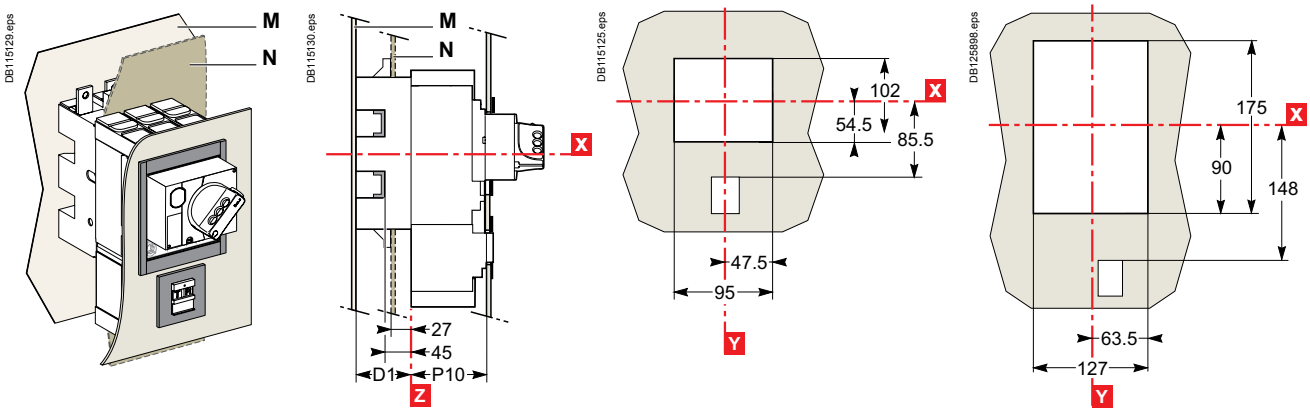

With IP40 front-panel escutcheon

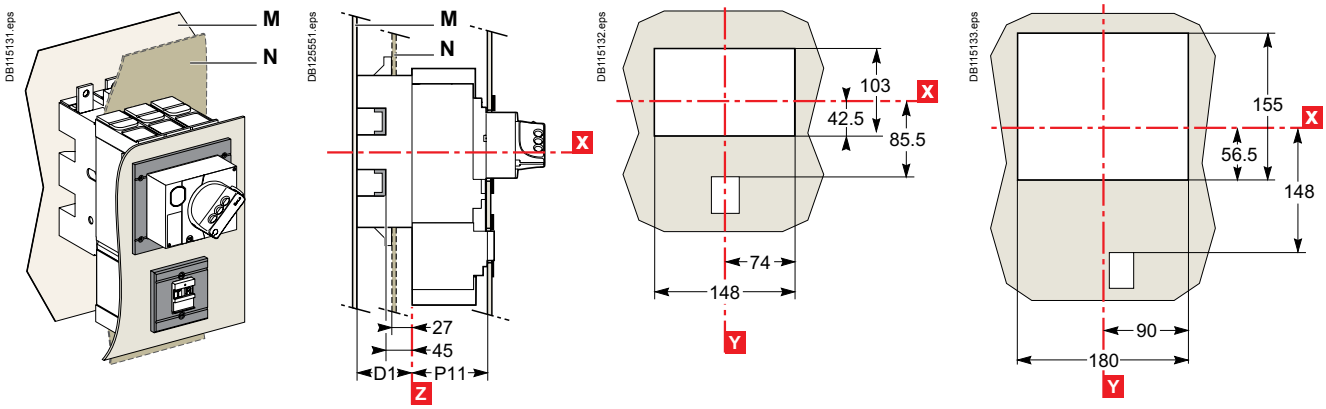

Fixed or withdrawable circuit breakers NSX100 to 250 NSX400/630

With IP40 front-panel escutcheon

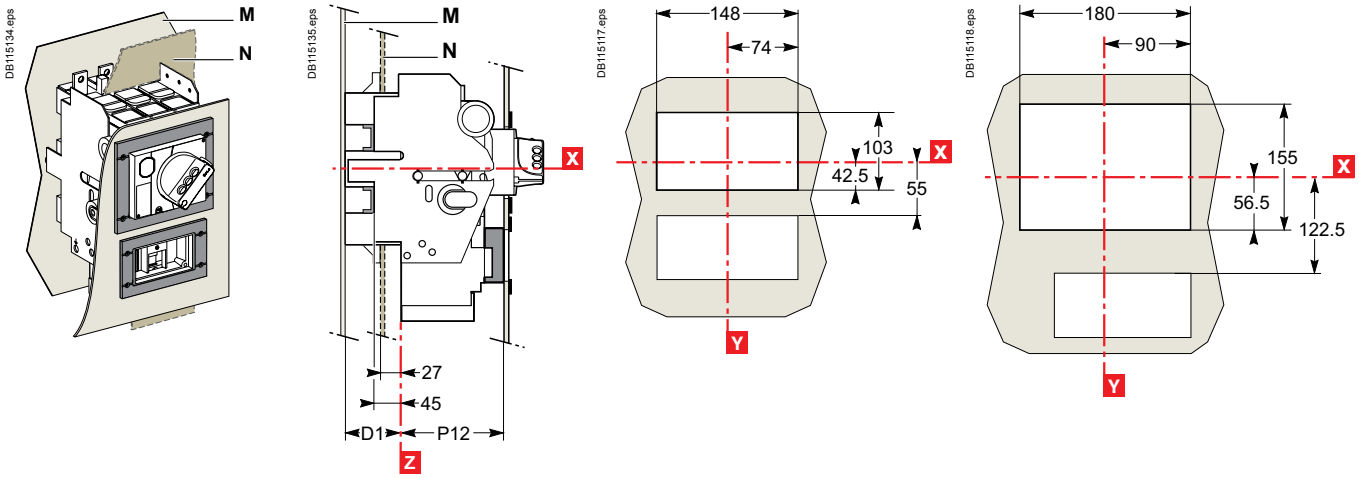

Type	D1	P10	P11	P12
NSX100/160/250	75	89	90	123
NSX400/630	100	112	113	147

Front-panel cutouts

Indication and measurement modules for Compact NSX100 to 630

Fixed or plug-in circuit breakers with ammeter module and voltage-presence indicator

Bare sheet metal

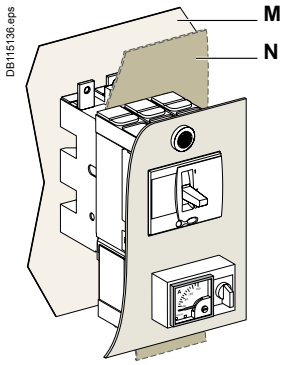

With toggle

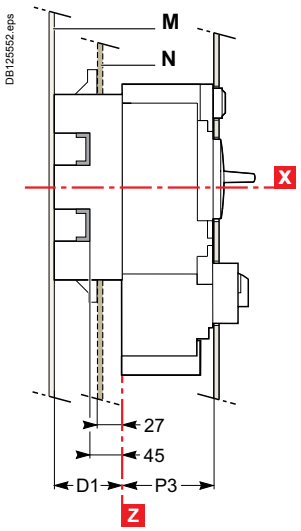

Rotary handle

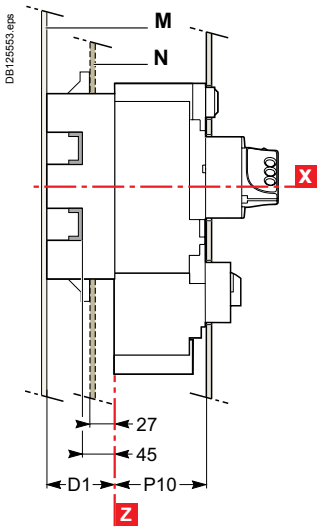

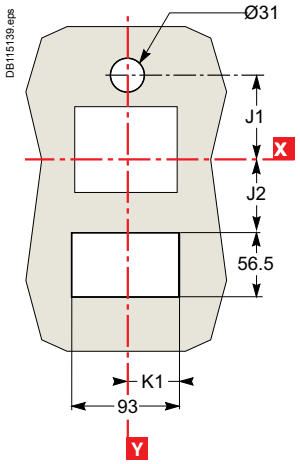

Type	D1	J1	J2	J3	K1	K2	P3	P4	P10	P11
NSX100/160/250	75	78.5	67.5	55	46.5	74	88	89	89	90
NSX400/630	100	122	129	122.5	64.5	90	112	113	112	113

Front-panel cutouts

Indication and measurement modules for Compact NSX100 to 630

Fixed or plug-in circuit breakers with ammeter module and voltage-presence indicator

With IP40 front-panel escutcheon

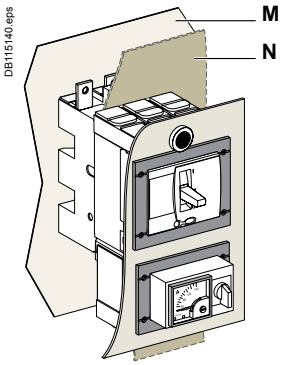

With toggle

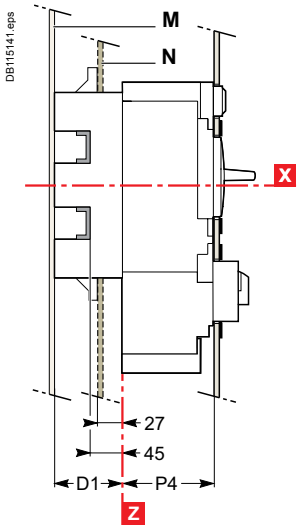

Rotary handle

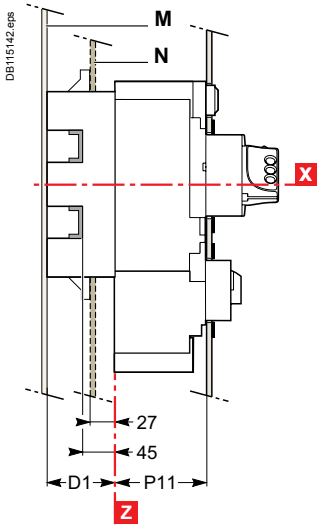

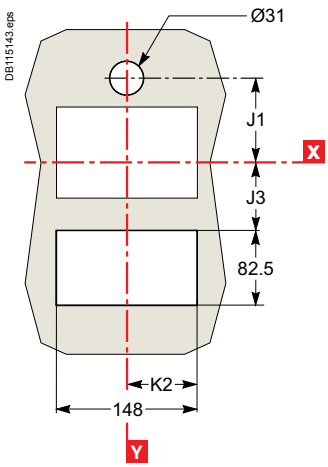

Type	D1	J1	J2	J3	K1	K2	P3	P4	P10	P11
NSX100/160/250	75	78.5	67.5	55	46.5	74	88	89	89	90
NSX400/630	100	122	129	122.5	64.5	90	112	113	112	113

Power connections
Compact and Vigicompact NSX100 to 630 fixed version

Connection locations

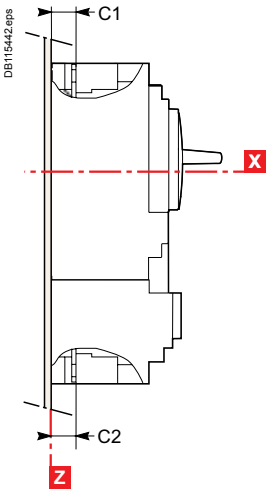

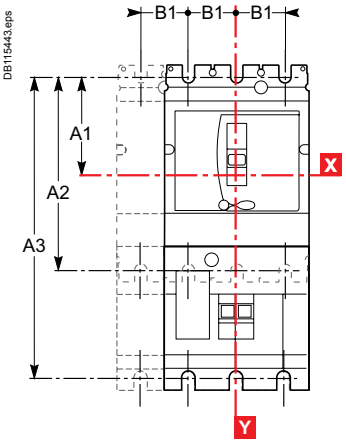

Type	A1	A2	B1	C1	C2
NSX100/160	70	140	35	19.5	19.5
NSX250	70	140	35	21.5	19.5
NSX400/630	113.5	227	45	26	26

Type	A1	A3	B1	C1	C2
NSX100/160 + Vigi	70	215	35	19.5	21.5
NSX250 + Vigi	70	215	35	21.5	21.5
NSX400/630 + Vigi	113.5	327	45	26	26

Front connection without accessories

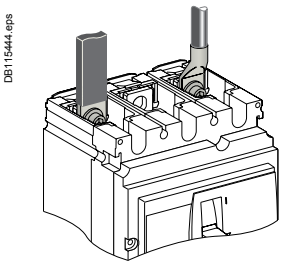

NSX100 to 250

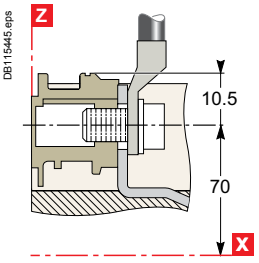

Cables with lugs/bars

NSX400/630

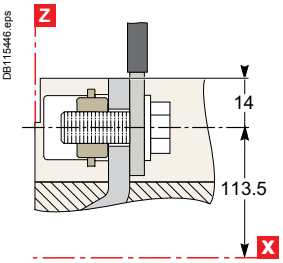

Bars/cables with lugs

Connection with accessories

Long and short rear connectors

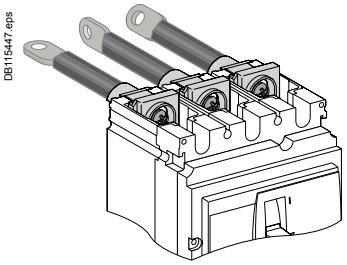

NSX100 to 250

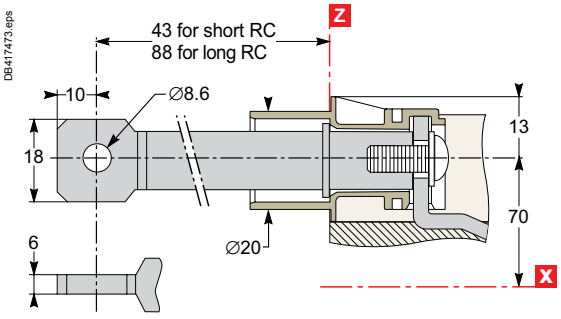

NSX400/630

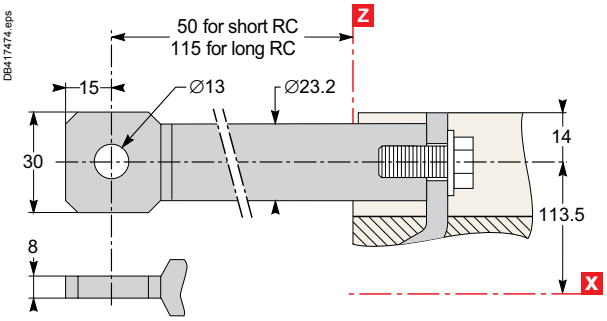

Connection with accessories (cont.)

Bare-cable connectors

DB115450.eps

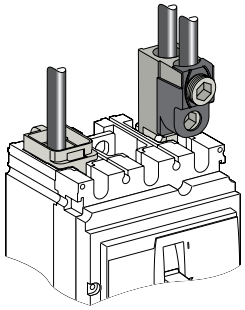

DB115453.eps

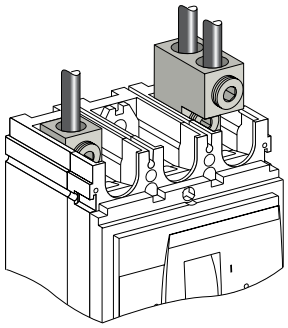

NSX100 to 250

DB417475.eps

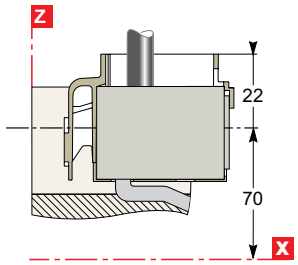

DB417476.eps

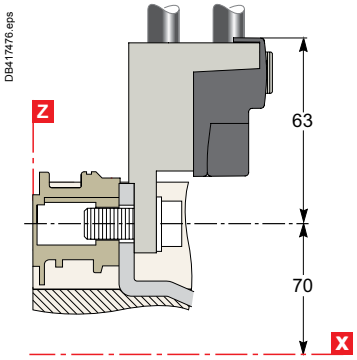

NSX400/630

DB417477.eps

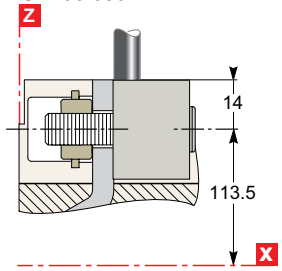

DB417478.eps

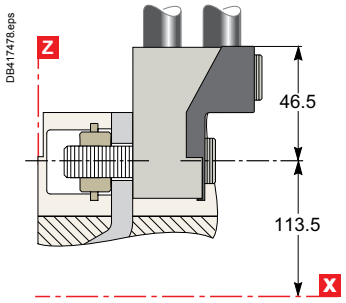

Distribution connectors (for NSX100 to 250 only)

DB115456.eps

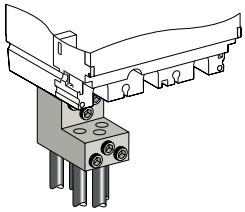

DB417479.eps

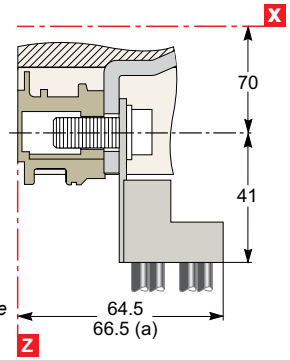

(a) Vigi module or NSX250.

Right-angle terminal extensions (upstream only)

DB115458

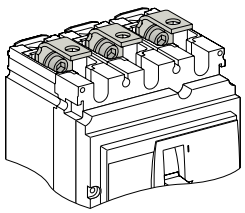

NSX100 to 250

DB115459

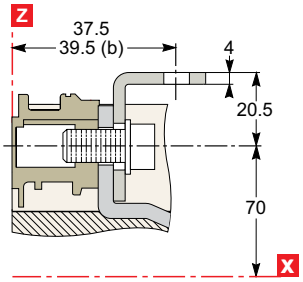

NSX400/630

DB115460

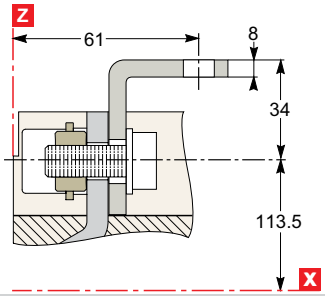

(b) NSX250.

Straight terminal extensions (for NSX100 to 250 only)

DB115461

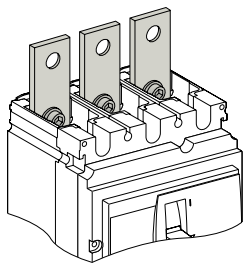

DB115462

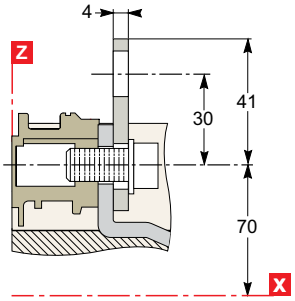

Power connections
Compact and Vigicompact NSX100 to 630 fixed version

Connection with accessories (cont.)

Edgewise terminal extensions

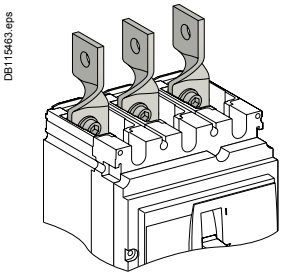

NSX100 to 250

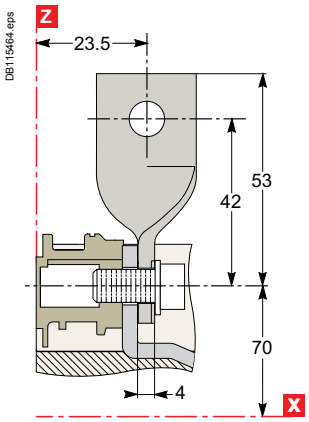

NSX400/630

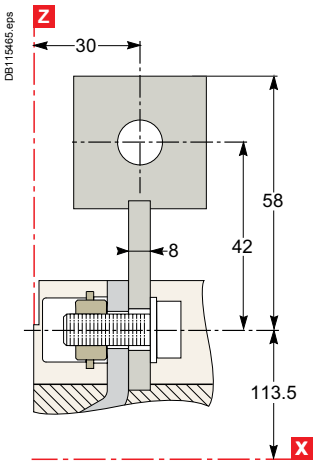

45° terminal extensions

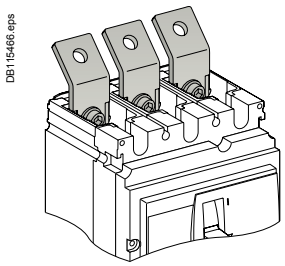

NSX100 to 250

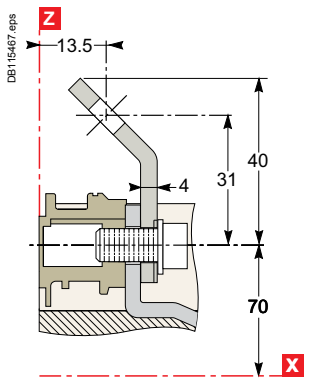

NSX400/630

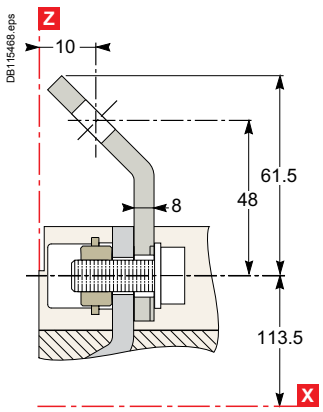

Double-L terminal extensions

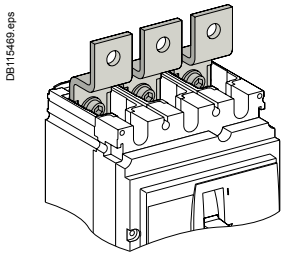

NSX100 to 250

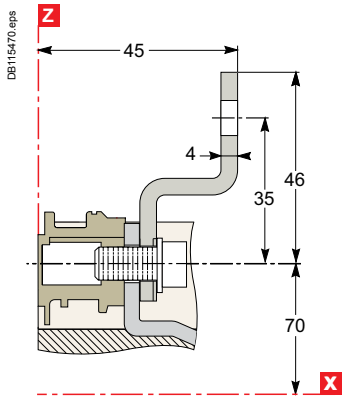

Connection with accessories (cont.)

Spreaders **3P** **4P**

DB115471.eps

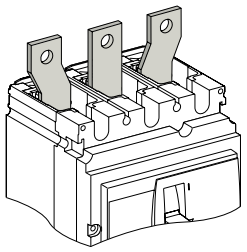

DB115472.eps

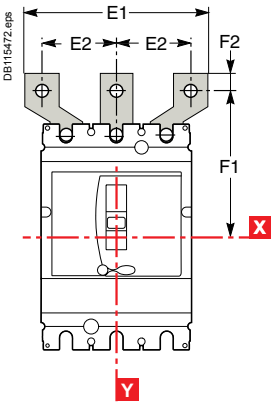

DB115473.eps

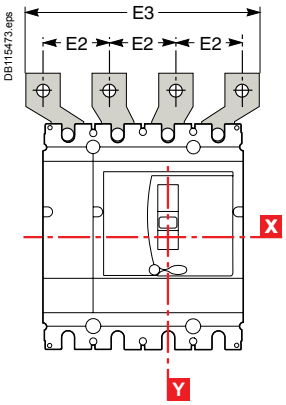

NSX100 to 250

DB115474.eps

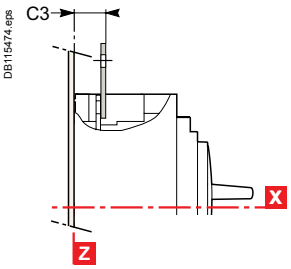

NSX400/630

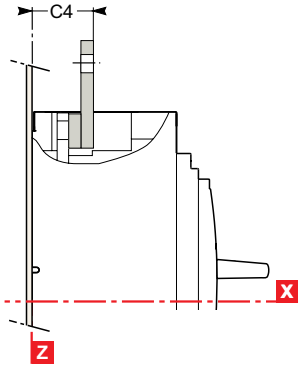

Type	C3	C4	E1	E2	E3	F1	F2
NSX100/160	23.5	-	114	45	159	100	11
NSX250	25.5	-	114	45	159	100	11
NSX400/630	-	44	135 170	52.5 70	187.5 240	152.5 166	15 15

One-piece spreader (for NSX100 to 250 only)

DB115475.eps

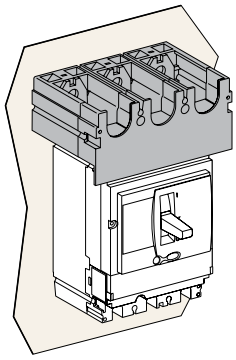

DB115476.eps

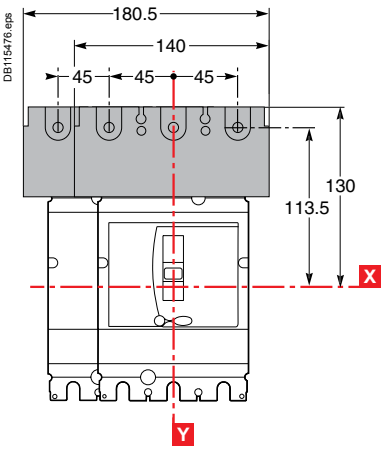

DB115477.eps

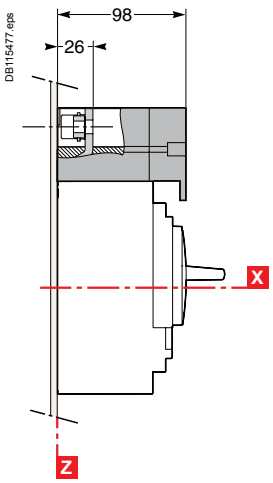

Power connections

Compact and Vigicompact NSX100 to 630 plug-in and withdrawable versions

Connection locations

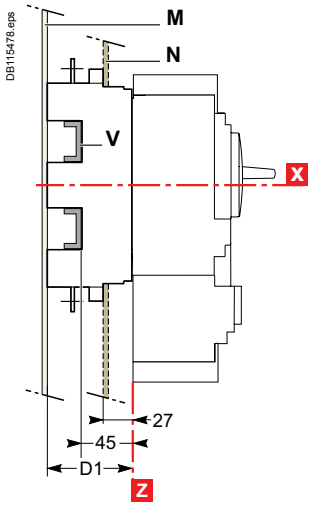

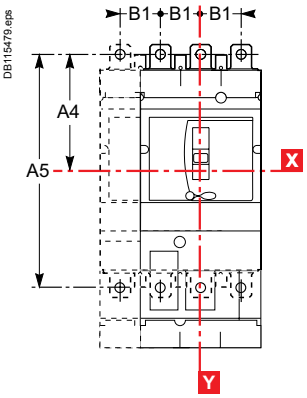

Type	A4	A5	B1	D1
NSX100 to 250	100	200	35	75
NSX400/630	156.5	313	45	100

Note:
- *for mounting on a backplate, the insulating screen supplied with the plug-in base must be installed.*
- *for withdrawable versions, terminal shields are recommended.*

Connection without accessories

Front connection: mounting on backplate (M) or rails (V)

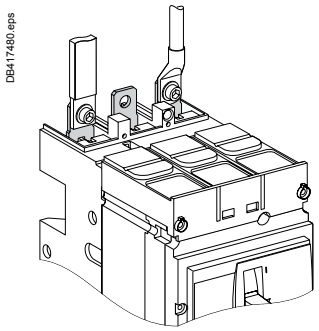

NSX100 to 250

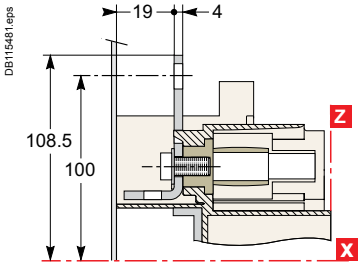

NSX400/630

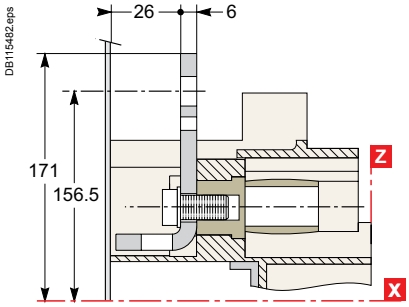

Rear connection: mounting through front panel (N) or on rails (V)

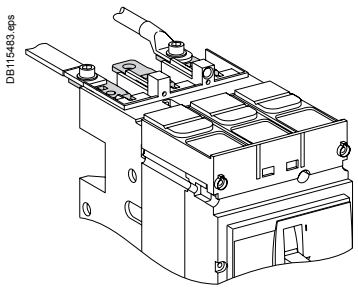

NSX100 to 250

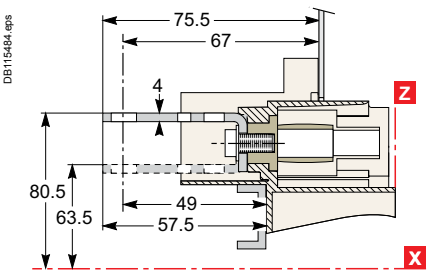

NSX400/630

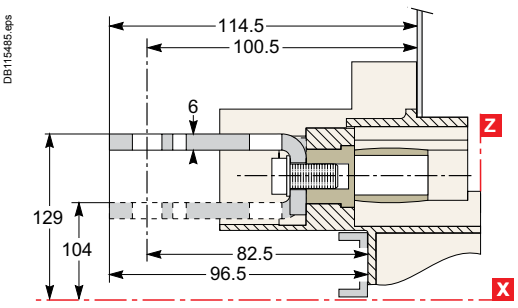

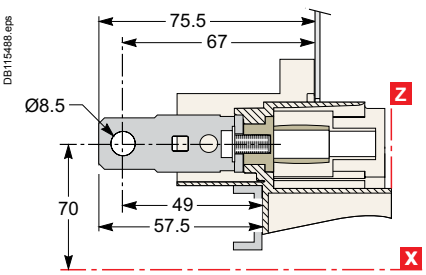

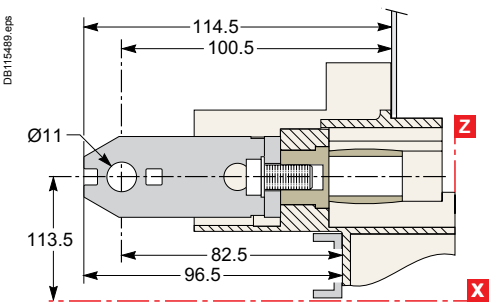

Connection with accessories

Bare-cable connectors: mounting on backplate (M) or rails (V)

NSX100 to 250

DB115490.eps

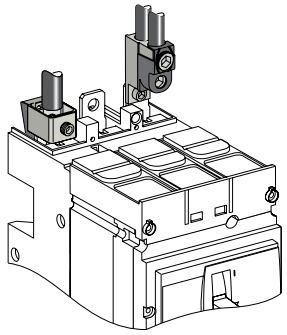

DB417481.eps

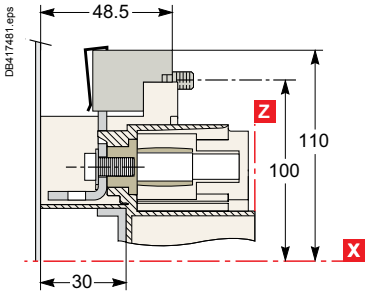

DB417482.eps

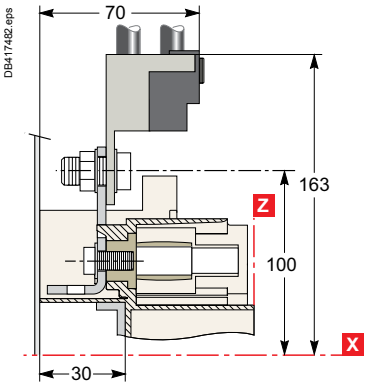

NSX400/630

DB115493.eps

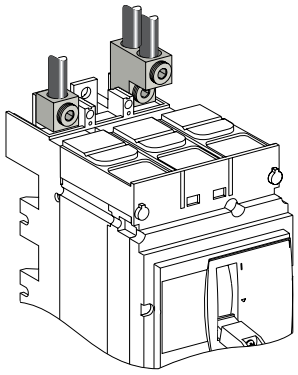

DB417483.eps

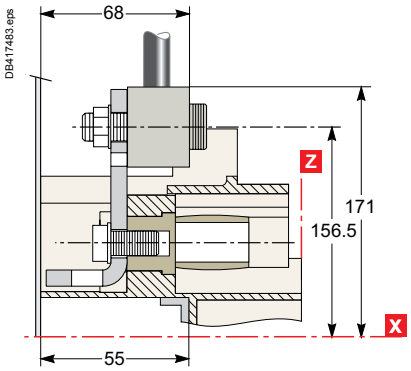

DB417484.eps

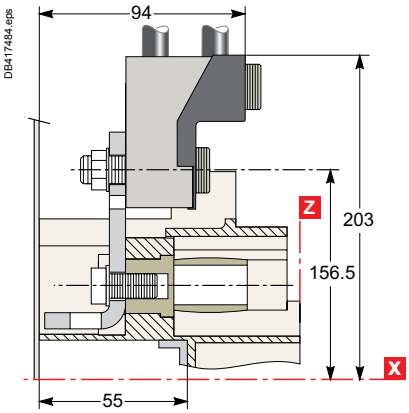

Bare-cable connectors: mounting through front panel (N) or on rails (V)

NSX100 to 250

DB115496.eps

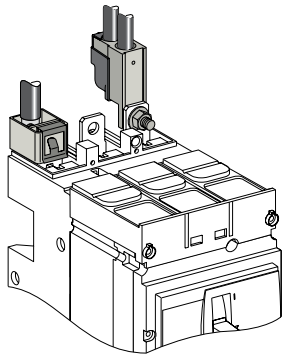

DB417485.eps

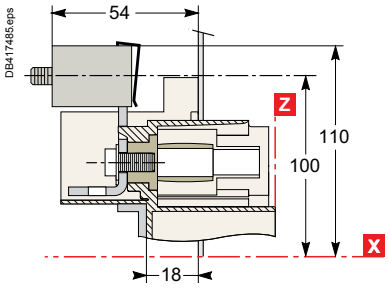

DB417486.eps

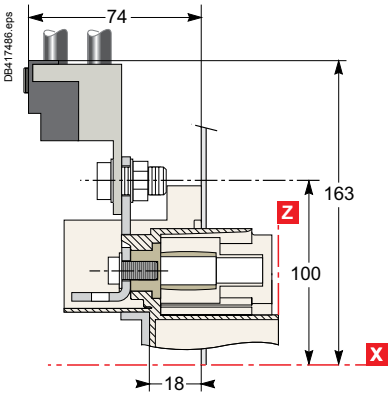

NSX400/630

DB115499.eps

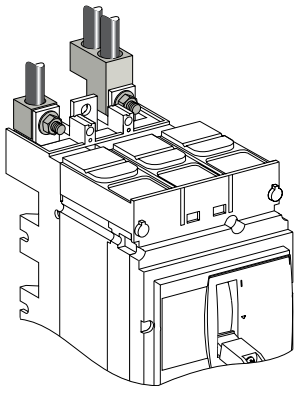

DB417487.eps

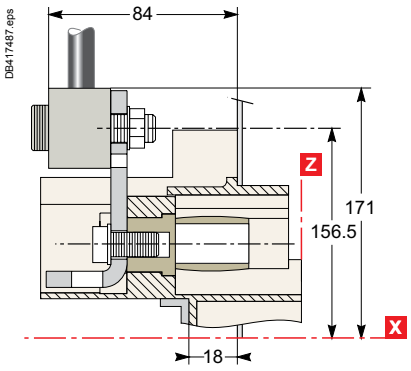

DB417488.eps

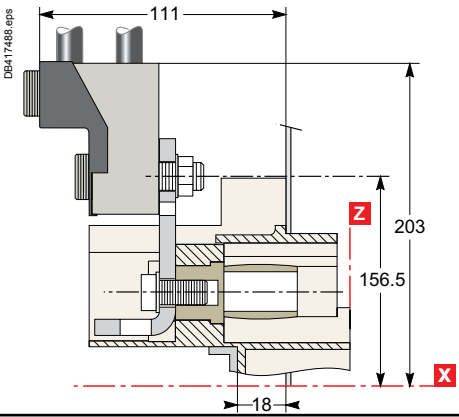

Power connections
Compact and Vigicompact NSX100 to 630 plug-in and withdrawable versions

Connection with accessories (cont.)

45° extensions: mounting through front panel (N) or on rails (V)

DB115506.eps

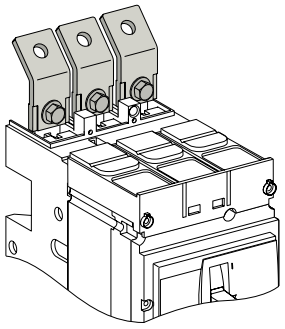

NSX100 to 250

DB115507.eps

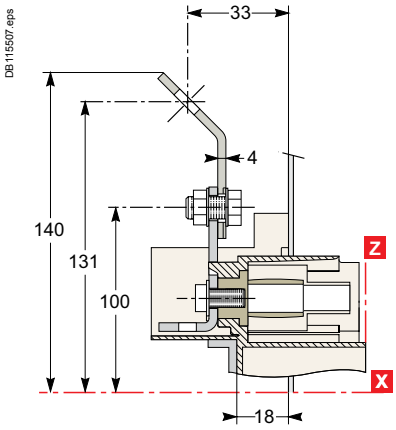

NSX400/630

DB115508.eps

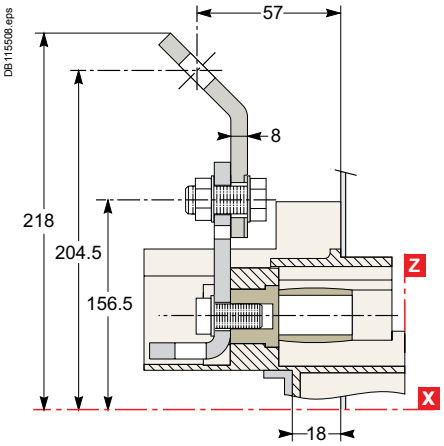

Double-L extensions: mounting on backplate (M) or rails (V)

DB115509.eps

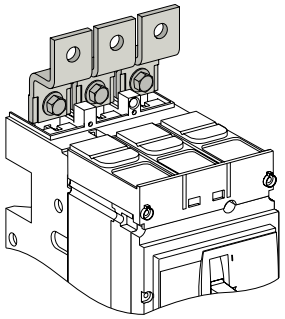

NSX100 to 250

DB115510.eps

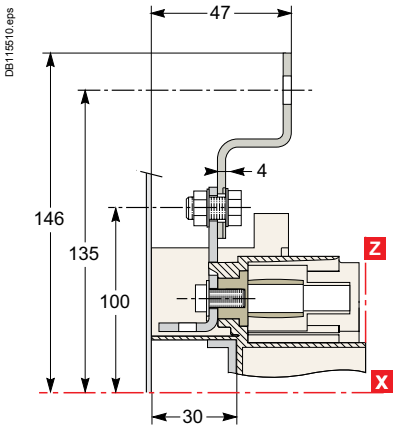

Double-L extensions: mounting through front panel (N) or on rails (V)

NSX100 to 250

DB115505.eps

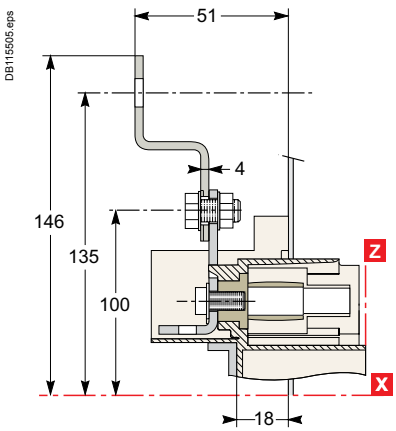

Connection with accessories (cont.)

Spreaders: mounting on backplate (M) or rails (V)

DB115511.eps

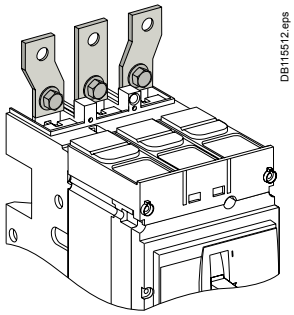

3P

DB115512.eps

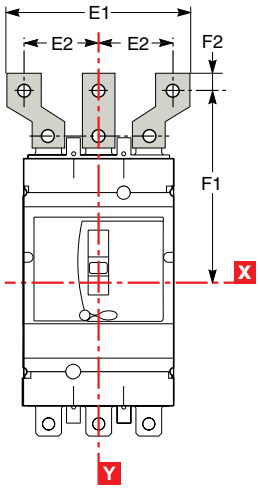

4P

DB115513.eps

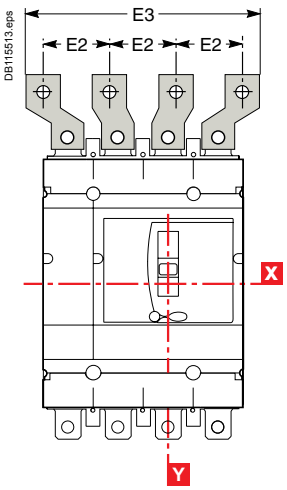

NSX100 to 250

DB115514.eps

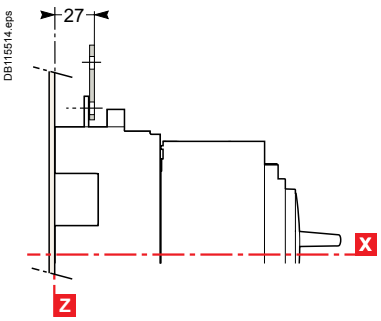

NSX400/630

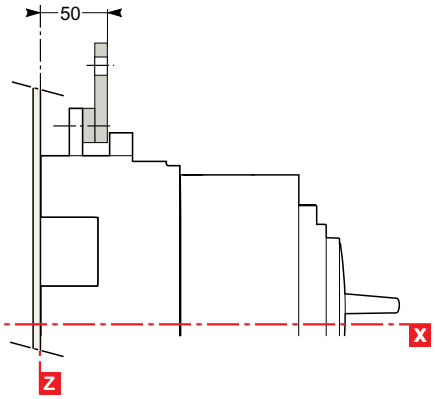

Type	E1	E2	E3	F1	F2
NSX100 to 250	114	45	159	130	11
NSX400/630	135 170	52.5 70	187.5 240	195.5 209	15 15

Long insulated rear connectors: mounting on backplate (M) or rails (V)

Exterior-mounted rear connectors

DB115515.eps

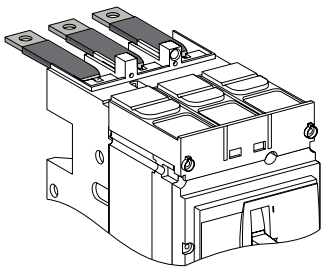

NSX100 to 250

DB115516.eps

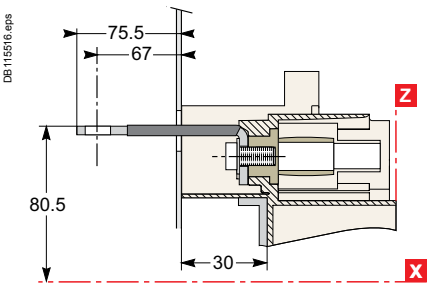

NSX400/630

DB115517.eps

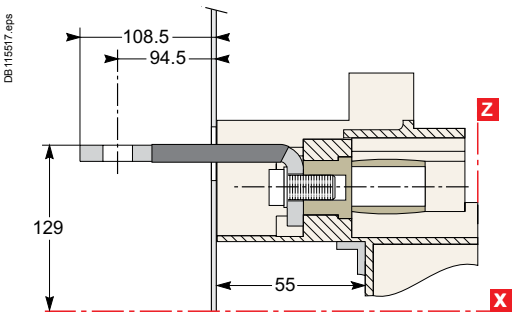

Interior-mounted rear connectors

DB115518.eps

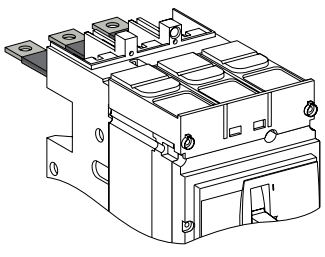

NSX100 to 250

DB115519.eps

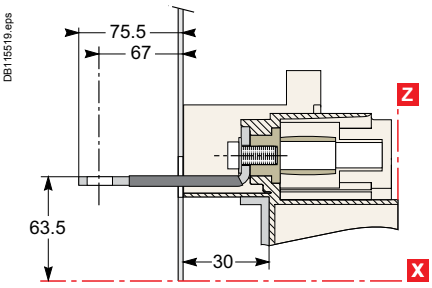

NSX400/630

DB115520.eps

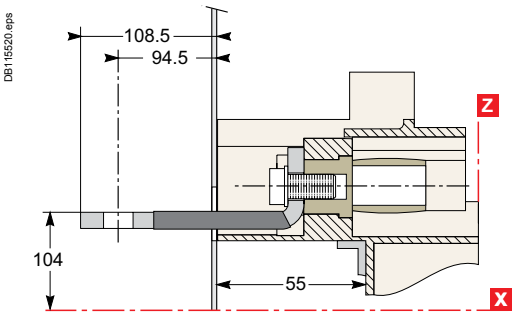

Long, insulated connectors are mandatory.

Power connections

Connection of insulated bars or cables with lugs to Compact and Vigicompact NSX100 to 630

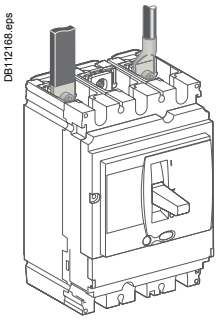

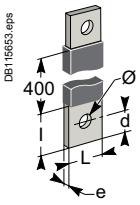

Bar.

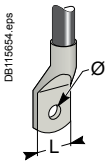

Lug.

Direct connection for NSX100 to 630

Dimensions		NSX100	NSX160/250	NSX400/630
Bars	L (mm)	≤ 25	≤ 25	≤ 32
	l (mm)	d + 10	d + 10	d + 15
	d (mm)	≤ 10	≤ 10	≤ 15
	e (mm)	≤ 6	≤ 6	3 ≤ e ≤ 10
	Ø (mm)	6.5	8.5	10.5
Lugs	L (mm)	≤ 25	≤ 25	≤ 32
	Ø (mm)	6.5	8.5	10.5
Torque (Nm) (1)		10	15	50
Torque (Nm) (2)		5/5	5/5	20/11
Torque (Nm) (3)		8	8	20

(1) Tightening torque on the circuit breaker for lugs or bars.
(2) Tightening torque on fixed devices for rear connectors//tightening torque on plug-in or withdrawable devices for power connectors.
(3) Tightening torque on the plug-in base for terminal extensions.

Accessories for NSX100 to 250

Straight terminal extensions

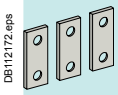

Tinned copper

Double-L terminal extensions

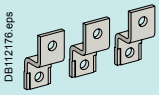

Tinned copper

Spreaders: separate parts

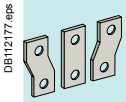

Tinned copper

one-piece spreader

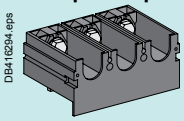

For U > 600 V, the mandatory insulation kit is not compatible with spreaders made up of separate parts. The one-piece spreader must be used.

Accessories for NSX400 and 630

Spreaders made up of separate parts for 52.5 and 70 mm pitch

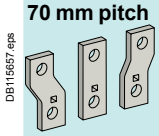

Tinned copper

For U > 600 V, use of the 52.5 mm pitch spreaders requires a specific insulation kit.
The 70 mm pitch spreaders may not be used.

Accessories for NSX100 to 630

Right-angle terminal extensions

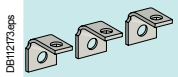

Tinned copper
To be mounted on upstream side.

Edgewise terminal extensions

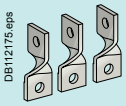

Tinned copper

45° terminal extensions

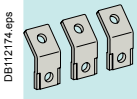

Tinned copper

Connection with accessories for NSX100 to 250 (IEC 228)

Pole pitch		
Without spreaders	35 mm	
With spreaders	45 mm	
Dimensions	**With spreaders or terminal extensions**	
	NSX100	**NSX160/250**

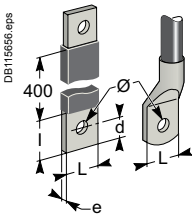

Bars	L (mm)	≤ 25	≤ 25
	l (mm)	20 ≤ l ≤ 25	20 ≤ l ≤ 25
	d (mm)	≤ 10	≤ 10
	e (mm)	≤ 6	≤ 6
	Ø (mm)	6.5	8.5
Lugs	L (mm)	≤ 25	≤ 25
	Ø (mm)	6.5	8.5
Torque (Nm) (1)		10	15
Torque (Nm) (2)		5	5

(1) Tightening torque on the circuit breaker for spreaders or terminal extensions.
(2) Tightening torque on the plug-in base for spreaders or terminal extensions.

Spreaders and straight, right-angle, 45°, double-L and edgewise terminal extensions are supplied with flexible interphase barriers.

Connection with accessories for NSX400 and 630 (IEC 228)

Pole pitch		
Without spreaders	45 mm	
With spreaders	52.5 or 70 mm	
Dimensions	**With spreaders**	**With terminal extensions**

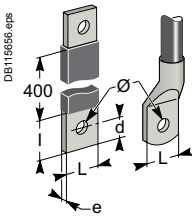

Bars	L (mm)	≤ 40	≤ 32
	l (mm)	d + 15	30 ≤ l ≤ 34
	d (mm)	≤ 20	≤ 15
	e (mm)	3 ≤ e ≤ 10	3 ≤ e ≤ 10
	Ø (mm)	12.5	10.5
Lugs	L (mm)	≤ 40	≤ 32
	Ø (mm)	12.5	10.5
Torque (Nm) (1)		50	50
Torque (Nm) (2)		20	20

(1) Tightening torque on the circuit breaker for spreaders or terminal extensions.
(2) Tightening torque on the plug-in base for spreaders or terminal extensions.

Spreaders and right-angle, 45° and edgewise terminal extensions are supplied with flexible interphase barriers.

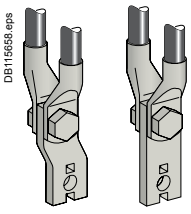

Mounting detail: 2 cables with lugs.

Connection of bare cables to Compact and Vigicompact NSX100 to 630

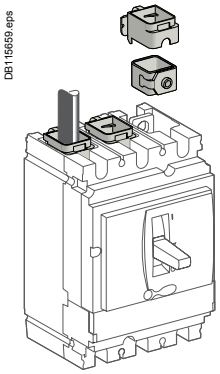

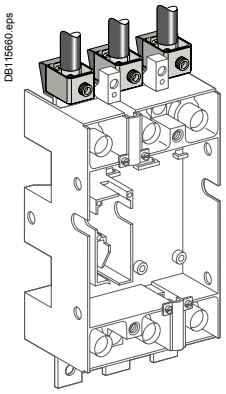

Connection for NSX100 to 250



1-cable connector

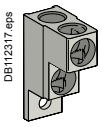

2-cable connector

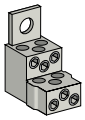

Distribution connector

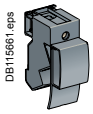

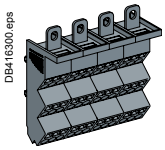

Linergy DP and Linergy DX distribution block

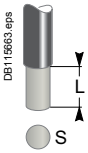

	1-cable connector	Steel ≤ 160 A	Aluminium ≤ 250 A		
	L (mm)	25	25		
	S (mm²) Cu / Al	1.5 to 95 (1)	25 to 50	70 to 95	120 to 185 150 max. flex.
	Torque (Nm)	12	20	26	26
	2-cable connector				
	L (mm)	25 or 50			
	S (mm²) Cu / Al	2 x 50 to 2 x 120			
	Torque (Nm)	22			
	6-cable distribution connector (copper or aluminium)				
	L (mm)	15 or 30			
	S (mm²) Cu / Al	1.5 to 6 (1)	8 to 35		
	Torque (Nm)	4	6		
	Linergy DX and Linergy DP distribution block (6 or 9 cables)				
	L (mm)	12	16		
	S (mm²) Cu / Al	6 x 4 to 10	3 x 6 to 16		

(1) For flexible cables from 1.5 to 4 mm², connection with crimped or self-crimping ferrules.

Connection for NSX400 and 630



1-cable connector

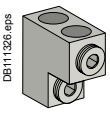

2-cable connector

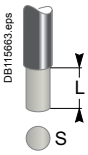

	1-cable connector	2-cable connector
L (mm)	30	30 or 60
S (mm²) Cu / Al	35 to 300 rigid 240 max. flex.	2 x 35 to 2 x 240 rigid 240 max. flex.
Torque (Nm)	31	31

Conductor materials and electrodynamic stresses

Compact NSX circuit breakers can be connected indifferently with bare-copper, tinned-copper and tinned-aluminium conductors (flexible or rigid bars, cables).
In the event of a short-circuit, thermal and electrodynamic stresses will be exerted on the conductors. They must therefore be correctly sized and held in place by supports.
Electrical connection points on switchgear devices (switch-disconnectors, contactors, circuit breakers, etc.) should not be used for mechanical support.
Any partition between upstream and downstream connections of the device must be made of non-magnetic material.

Accumulated experience

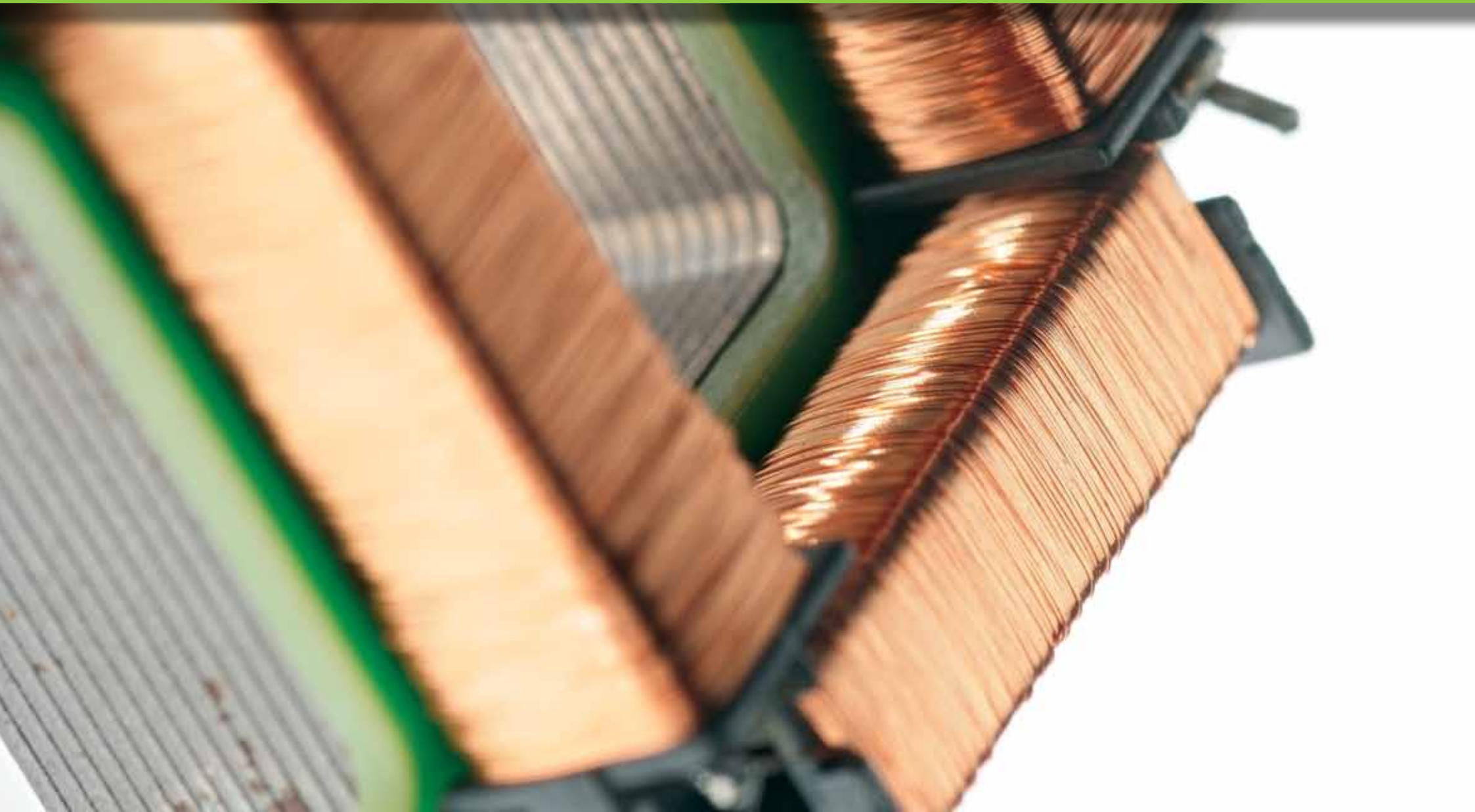

Wiring diagrams
Contents

Functions and characteristics *A-1*
Installation recommendations *B-1*
Dimensions and connection *C-1*

Compact NSX100 to 630

Fixed circuit breakers D-2
Plug-in / withdrawable circuit breakers D-4
Motor mechanism D-6
SDx module with Micrologic D-8
SDTAM module with Micrologic M D-9
Communication D-10

Additional characteristics *E-1*
Glossary *G-1*

Compact NSX100 to 630
Fixed circuit breakers

DB115707.eps

Power

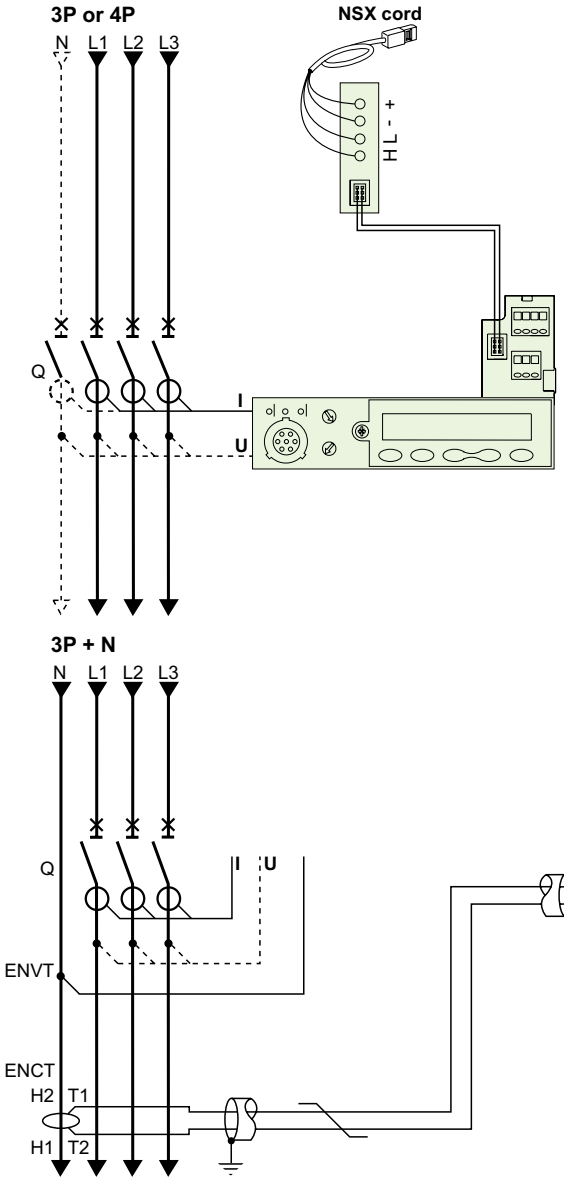

Micrologic

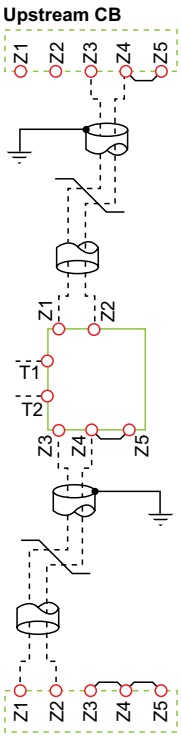

Remote operation

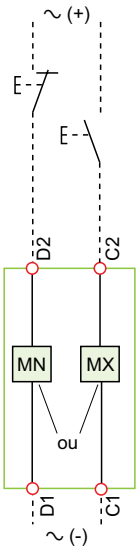

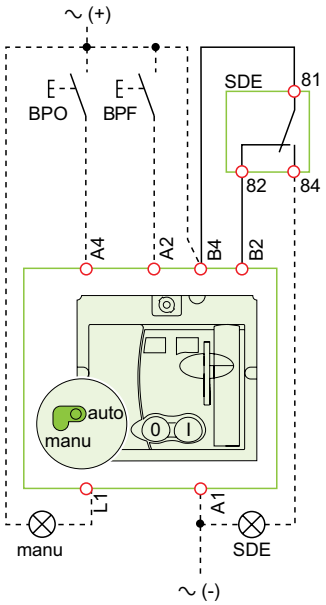

Motor mechanism (MT)

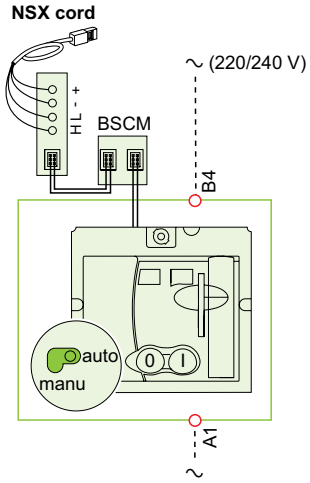

Communicating motor mechanism (MTc)

Micrologic A or E

A/E **Communication**
H(WH), L(BL): data
- (BK), + (RD): 24 V DC power supply

A/E ZSI (Zone Selective Interlocking)
Z1: ZSI OUT SOURCE
Z2: ZSI OUT
Z3: ZSI IN SOURCE
Z4: ZSI IN ST (short time)
Z5: ZSI IN GF (ground fault)
Note: Z3, Z4, Z5 for NSX400/630 only.

A/E ENCT: external neutral current transformer:
- shielded cable with 1 twisted pair (T1, T2)
- shielding earthed at one end only (CT end).
Connection L = 30 cm max.
- maximum length of 10 metres
- cable size 0.4 to 1.5 mm^2
- recommended cable: Belden 8441 or equivalent.

E ENVT: external neutral voltage tap for connection to the neutral via a 3P circuit breaker.

Remote operation

MN: undervoltage release
or
MX: shunt release

Motor mechanism (MT)

A4: opening order
A2: closing order
B4, A1: power supply to motor mechanism
L1: manual position (manu)
B2: SDE interlocking (mandatory for correct operation)

BPO: opening pushbutton
BPF: closing pushbutton

Communicating motor mechanism (MTc)

B4, A1: motor mechanism power supply
BSCM: breaker status and control module

Compact NSX100 to 630
Fixed circuit breakers

Indication contacts

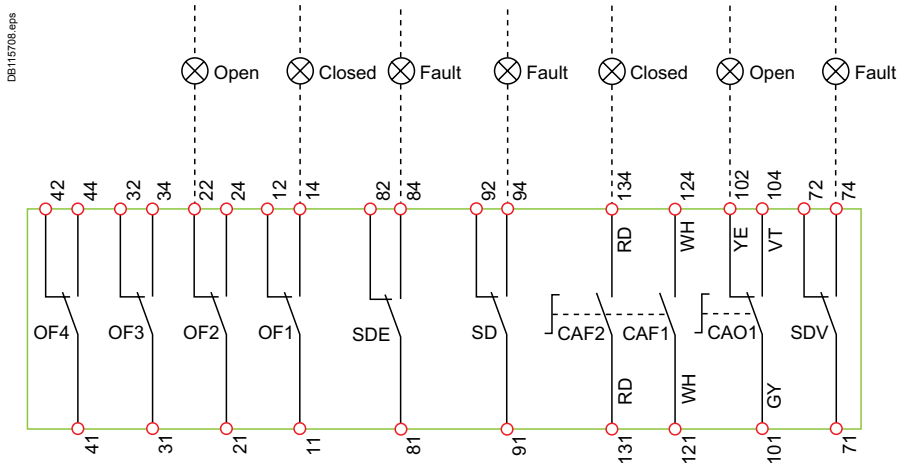

The diagram is shown with circuits de-energised, all devices open, connected and charged and relays in normal position.

Terminals shown in red O must be connected by the customer.

Indication contacts

OF2 / OF1:	device ON/OFF indication contacts
OF4 / OF3:	device ON/OFF indication contacts (NSX400/630)
SDE:	fault-trip indication contact (short-circuit, overload, ground fault, earth leakage)
SD:	trip-indication contact
CAF2/CAF1:	early-make contact (rotary handle only)
CAO1:	early-break contact (rotary handle only)
SDV:	earth leakage fault trip indication contact (add-on Vigi module)

Colour code for auxiliary wiring

RD:	red	**VT:**	violet
WH:	white	**GY:**	grey
YE:	yellow	**OR:**	orange
BK:	black	**BL:**	blue
GN:	green		

Compact NSX100 to 630
Plug-in / withdrawable circuit breakers

DB402277.eps

Power

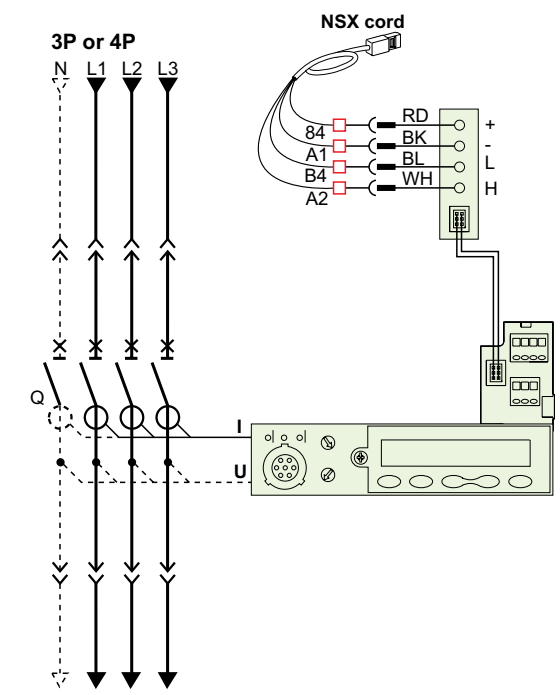

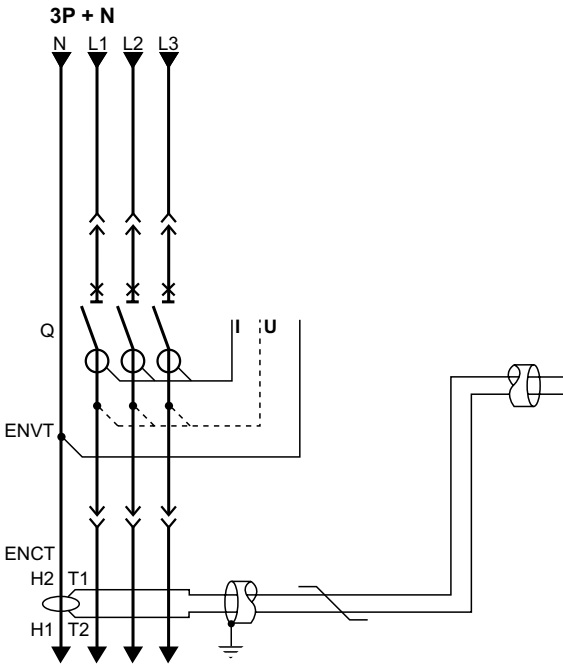

Micrologic

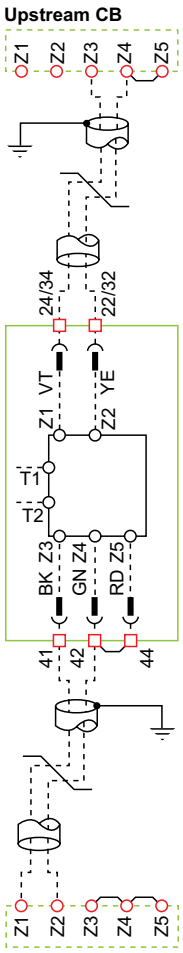

Remote operation

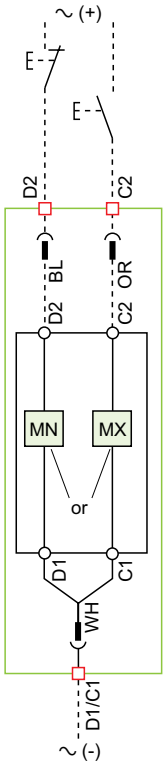

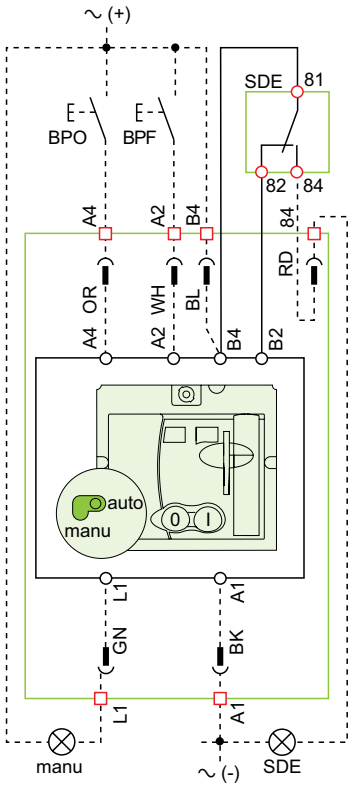

Motor mechanism (MT)

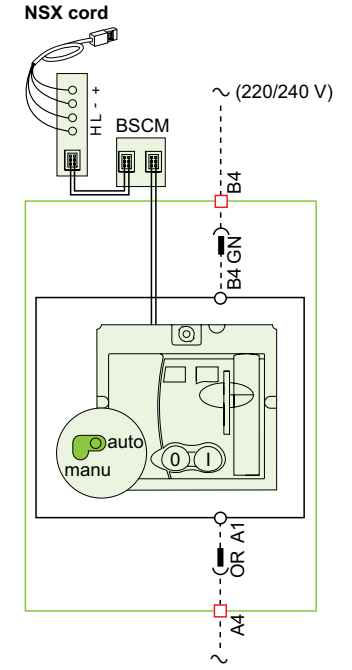

Communicating motor mechanism (MTc)

The diagram is shown with circuits de-energised, all devices open, connected and charged and relays in normal position.

Compact NSX100 to 630
Plug-in / withdrawable circuit breakers

Indication contacts

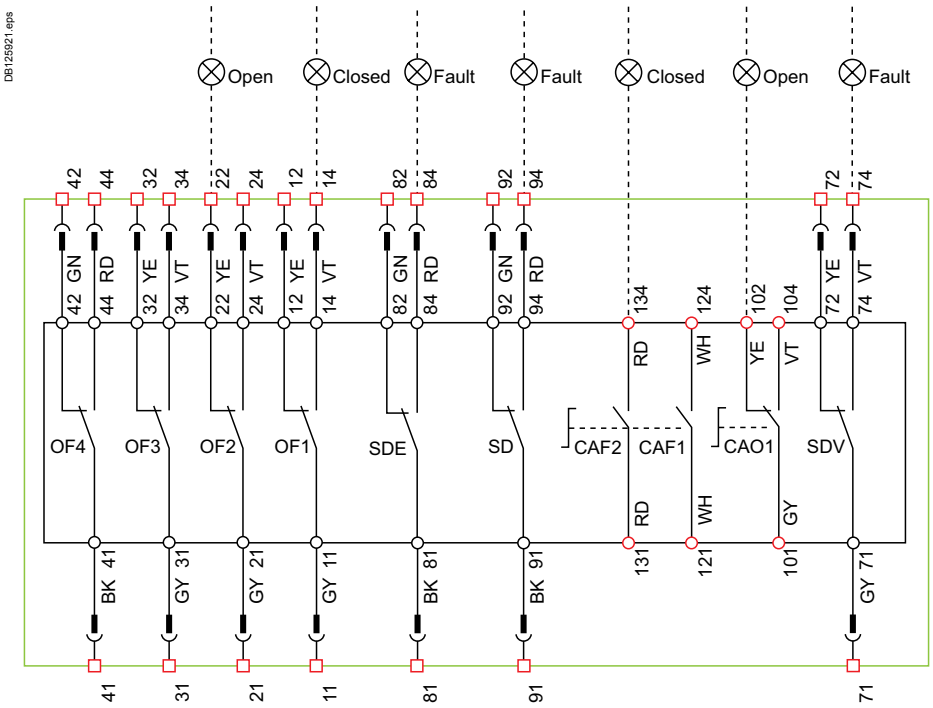

Carriage switches

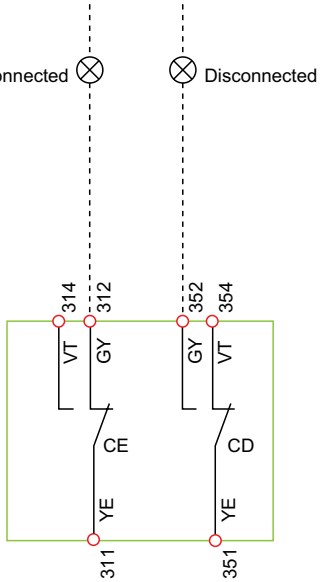

Micrologic A or E

A/E	**Communication** H(WH), L(BL): data - (BK), + (RD): 24 V DC power supply
A/E	ZSI (Zone Selective Interlocking) Z1: ZSI OUT SOURCE Z2: ZSI OUT Z3: ZSI IN SOURCE Z4: ZSI IN ST (short time) Z5: ZSI IN GF (ground fault) *Note: Z3, Z4, Z5 for NSX400/630 only.*
A/E	ENCT: external neutral current transformer: - shielded cable with 1 twisted pair (T1, T2) - shielding earthed at one end only (CT end). Connection L = 30 cm max. - maximum length of 10 metres - cable size 0.4 to 1.5 mm^2 - recommended cable: Belden 8441 or equivalent.
E	ENVT: external neutral voltage tap for connection to the neutral via a 3P circuit breaker.

Colour code for auxiliary wiring

RD:	red	**VT:**	violet
WH:	white	**GY:**	grey
YE:	yellow	**OR:**	orange
BK:	black	**BL:**	blue
GN:	green		

Terminals shown in red □ / O must be connected by the customer.

Remote operation

MN: undervoltage release

or

MX: shunt release

Motor mechanism (MT)

A4: opening order

A2: closing order

B4, A1: motor mechanism power supply

L1: manual position (manu)

B2: SDE interlocking (mandatory for automatic or remote recharging)

BPO: opening pushbutton

BPF: closing pushbutton

Communicating motor mechanism (MTc)

B4, A1: motor mechanism power supply

BSCM: breaker status and control module

Indication contacts

OF2 / OF1: device ON/OFF indication contacts

OF4 / OF3: device ON/OFF indication contacts (NSX400/630)

SDE: fault-trip indication contact (short-circuit, overload, ground fault, earth leakage)

SD: trip-indication contact

CAF2/CAF1: early-make contact (rotary handle only)

CAO1: early-break contact (rotary handle only)

SDV: earth leakage fault trip indication contact (add-on Vigi module)

Compact NSX100 to 630
Motor mechanism

The diagram is shown with circuits de-energised, all devices open, connected and charged and relays in normal position.

After tripping initiated by the "Push to trip" button or by the undervoltage (MN) release or the shunt (MX) release, device reset can be automatic, remote or manual.

Following tripping due to an electrical fault (with an SDE contact), reset must be carried out manually.

Motor mechanism (MT) with automatic reset

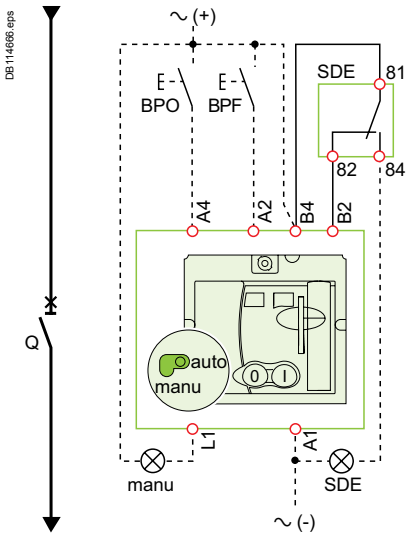

Motor mechanism (MT) with remote reset

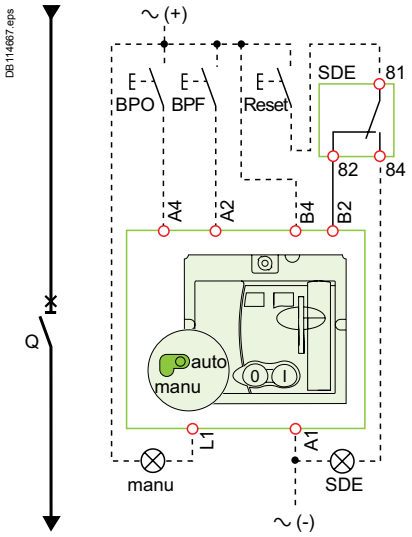

Motor mechanism (MT) with manual reset

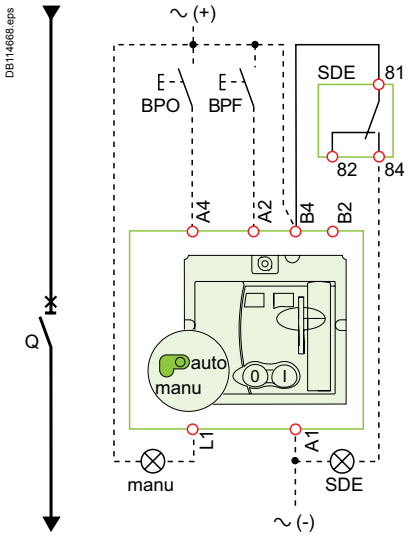

Symbols

Q:	circuit breaker
A4 :	opening order
A2:	closing order
B4, A1:	motor mechanism power supply
L1:	manual position (manu)
B2:	SDE interlocking (mandatory for correct operation)
BPO:	opening pushbutton
BPF:	closing pushbutton
SDE:	fault-trip indication contact (short-circuit, overload, ground fault, earth leakage)

Compact NSX100 to 630
Motor mechanism

Communicating motor mechanism (MTc)

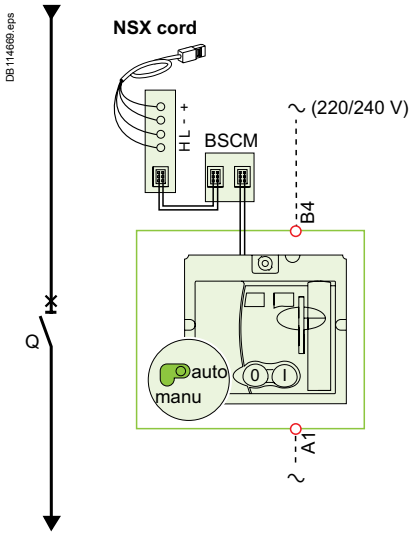

Schematic representation of the communicating motor mechanism (MT).

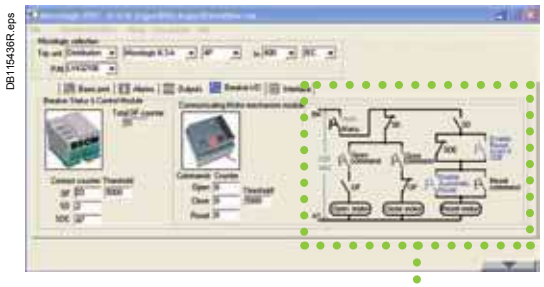

RSU utility setup screen for the communicating motor mechanism.

RSU screen for the communicating motor mechanism (MTc)

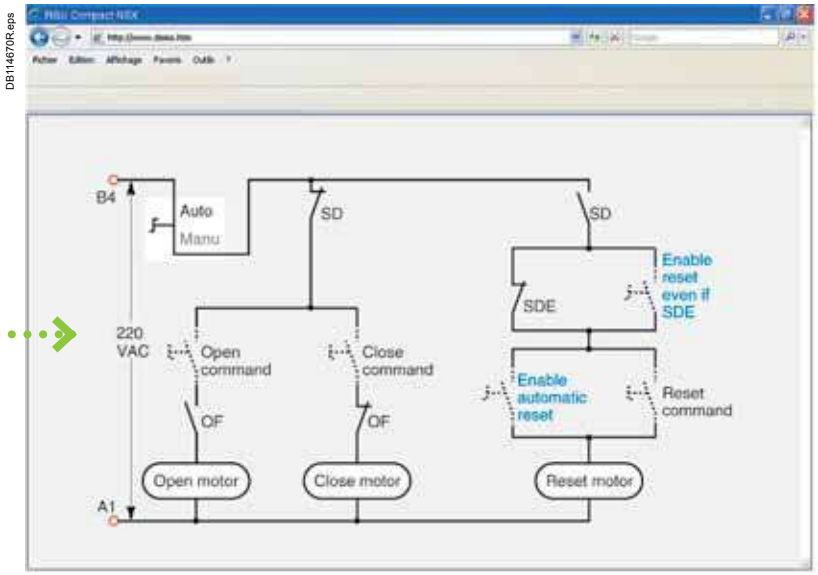

Single-line diagram of communicating motor mechanism
Opening, closing and reset orders are transmitted via the communication network. The "Enable automatic reset" and "Enable reset even if SDE" parameters must be set using the RSU software via the screen by clicking the blue text.

"**Auto/manu**" is a switch on the front of the motor mechanism.

Symbols	
Q:	circuit breaker
B4, A1:	motor mechanism power supply
BSCM:	breaker status and control module

Terminals shown in red O must be connected by the customer.

Compact NSX100 to 630
SDx module with Micrologic

The diagram is shown with circuits de-energised, all devices open, connected and charged and relays in normal position.

Symbols

SD1, SD3: SDx-module power supply
SD2: output 1 (80 mA max.)
SD4: output 2 (80 mA max.)

	SD2	SD4
Micrologic 2	SDT	-
Micrologic 5	SDT or output 1	PAL Ir or output 2
Micrologic 6	SDT or output 1	SDG or output 2

Terminals shown in red **O** *must be connected by the customer.*

Connection

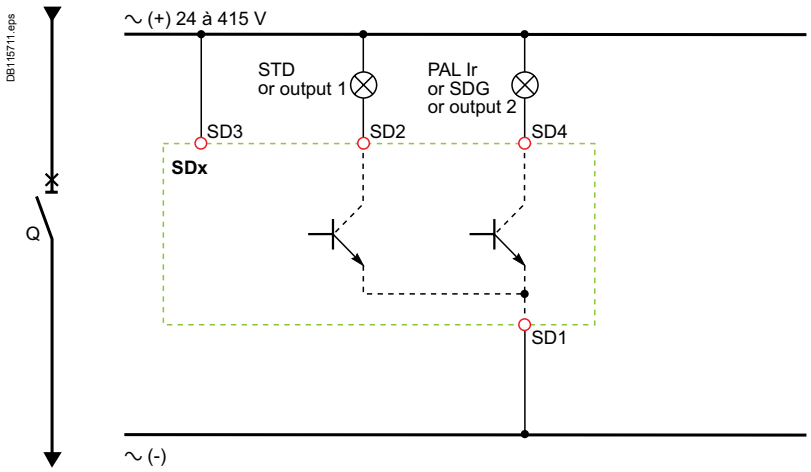

Operation

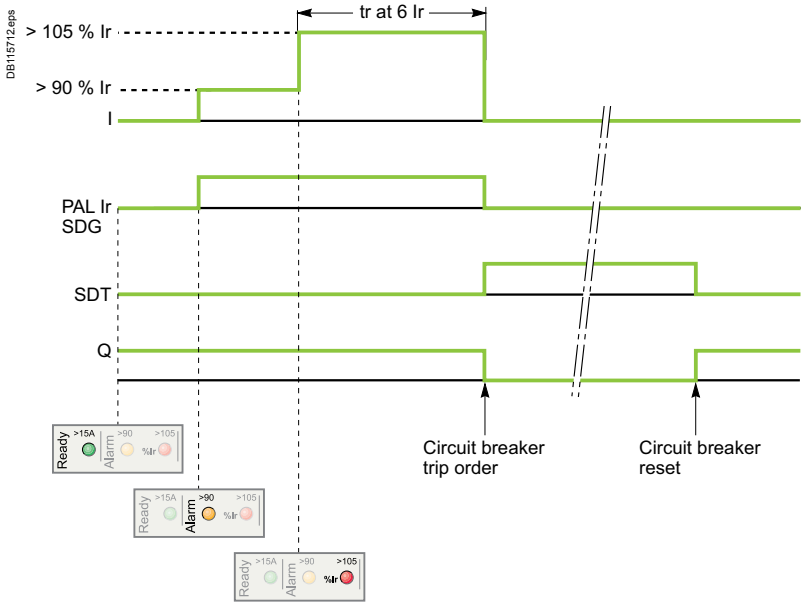

I: *charge current*
PAL Ir: *thermal overload pre-alarm*
SDG: *ground-fault signal*
SDT: *thermal-fault signal*
Q: *circuit breaker*

Compact NSX100 to 630
SDTAM module with Micrologic M

The diagram is shown with circuits de-energised, all devices open, connected and charged and relays in normal position.

Symbols

SD1, SD3: SDTAM-module power supply

SD2: thermal-fault signal output (80 mA max.)

SD4: contactor-control output (80 mA max.)

	SD2	SD4
Micrologic 2-M	SDT	KA1
Micrologic 6 E-M	SDT	KA1

Terminals shown in red O must be connected by the customer.

Connection

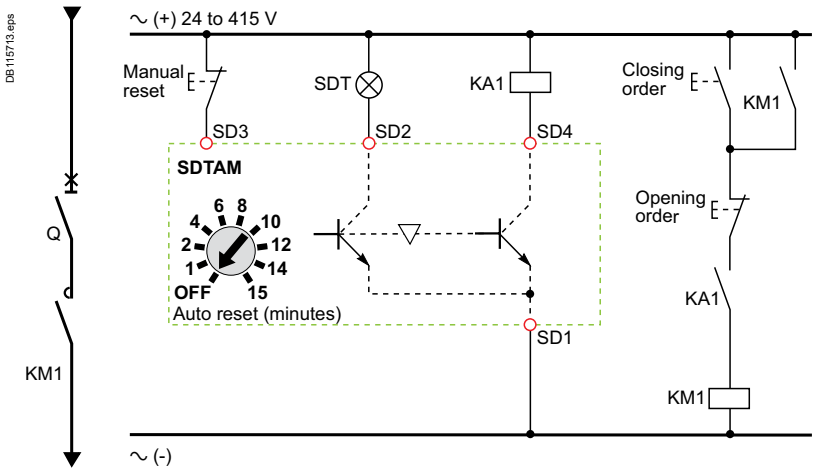

Operation

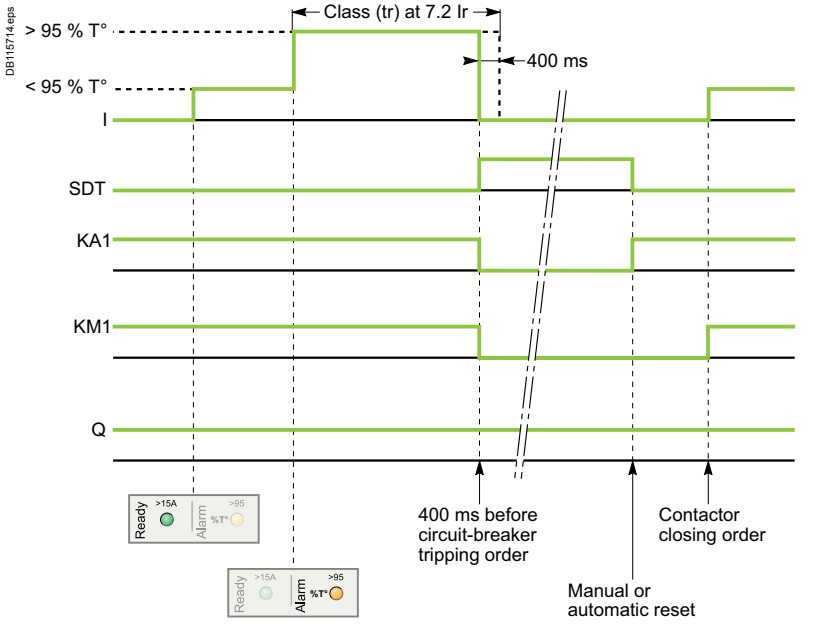

I: *charge current*

SDT: *thermal-fault signal*

KA1: *auxiliary relay (e.g. RBN or RTBT relay)*

KM1: *motor contactor*

Q: *circuit breaker*

Compact NSX100 to 630
Communication

Connection of circuit breakers to the Modbus communication network

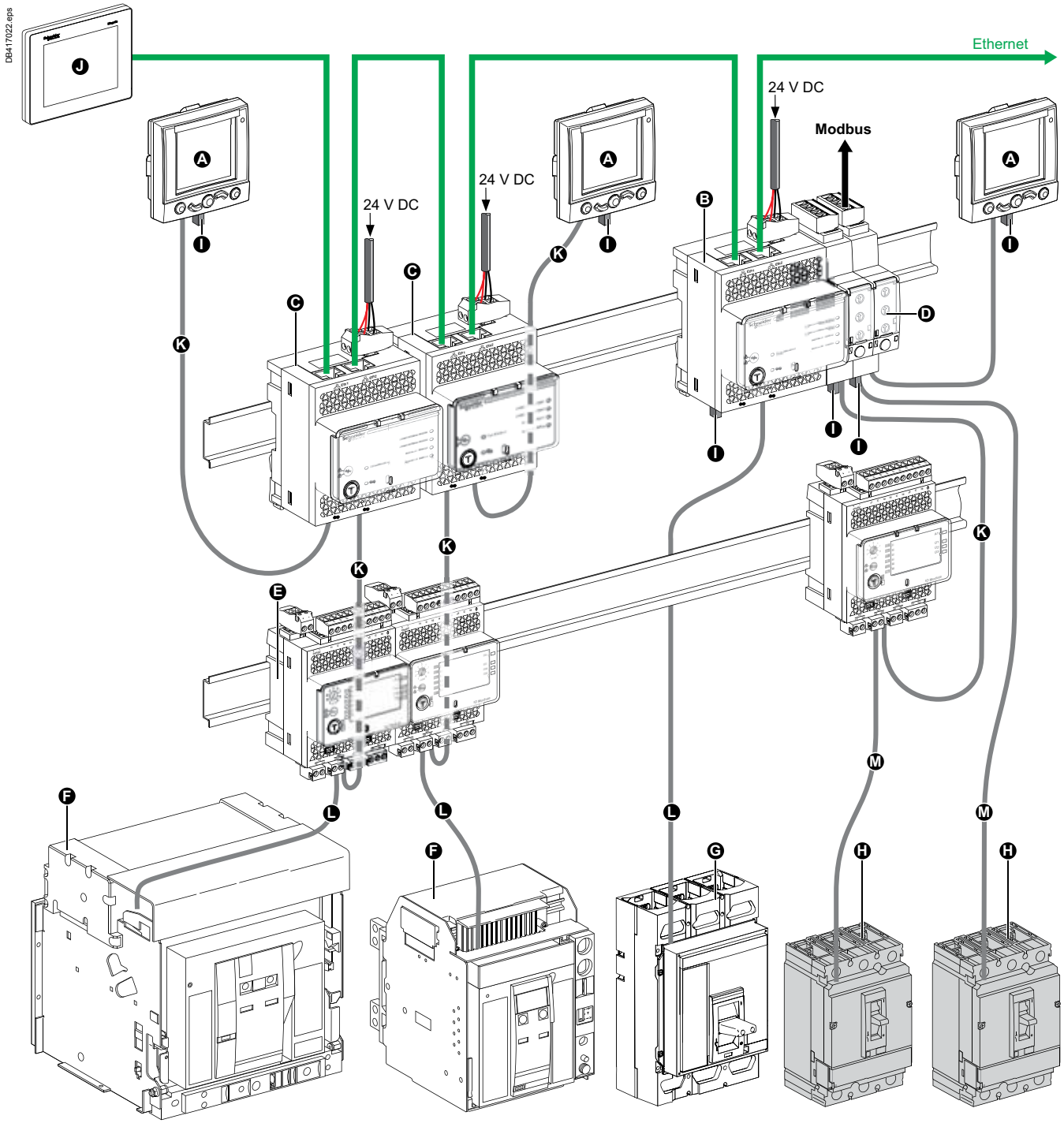

- A FDM121 (TRV00121)
- B IFE master (LV434011)
- C IFE (LV434010)
- D IFM (TRV00210)
- E IO application module (LV434063)
- F Masterpact NT/NW
- G Compact NS630b-3200
- H Compact NSX
- I ULP termination (TRV00880)
- J FDM128 (LV434128)

- K ULP cable
- L Breaker ULP cord
- M NSX cord
- Ethernet
- Modbus

Compact NSX100 to 630
Communication

DB417106.eps

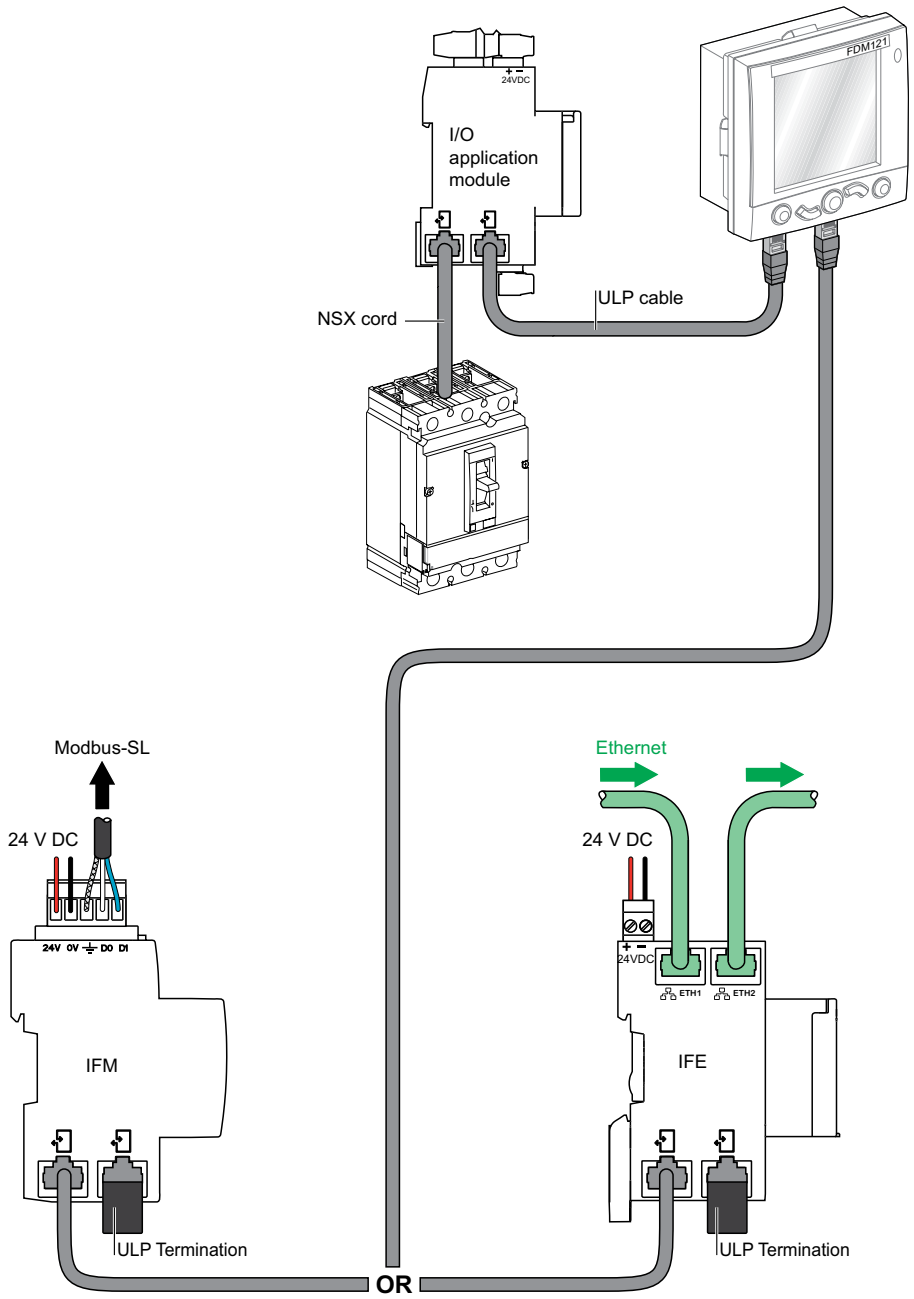

Reinforced discrimination



Additional characteristics
Contents

Functions and characteristics *A-1*
Installation recommendations *B-1*
Dimensions and connection *C-1*
Wiring diagrams *D-1*

Compact NSX100 to 250 **E-2**
TMD magnetic trip units, tripping curves E-2
TMG magnetic trip units, tripping curves E-5
Micrologic 2.2 and 2.2 G electronic trip units, tripping curves E-8
Micrologic 5.2 and 6.2 A or E electronic trip units, tripping curves E-9
MA magnetic trip units, Micrologic 2.2 M electronic trip units, tripping curves E-10
Micrologic 6.2 E-M electronic trip units, tripping curves E-11

Compact NSX400 to 630 **E-12**
Micrologic 2.3, 5.3 and 6.3 A or E electronic trip units, tripping curves E-12
Micrologic 6.3 A or E electronic trip units, tripping curves E-13
Micrologic 1.3 M and 2.3 M electronic trip units, tripping curves E-14
Micrologic 6.3 E-M electronic trip units, tripping curves E-15

Tripping curves **E-16**
Compact NSX100 to 630 E-16

Current and energy limiting curves **E-17**
Glossary *G-1*

Compact NSX100 to 250

TMD magnetic trip units, tripping curves

Protection of distribution systems

TM16D

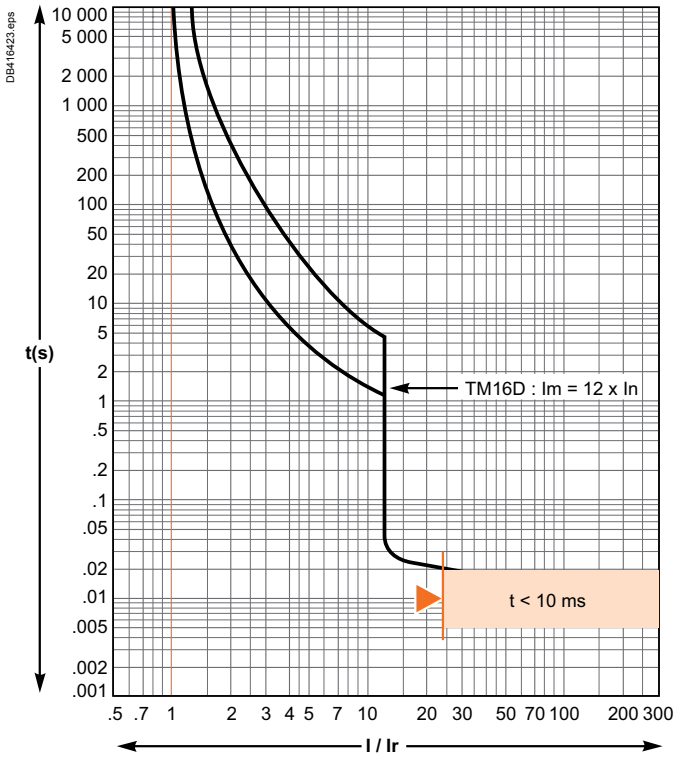

TM25D

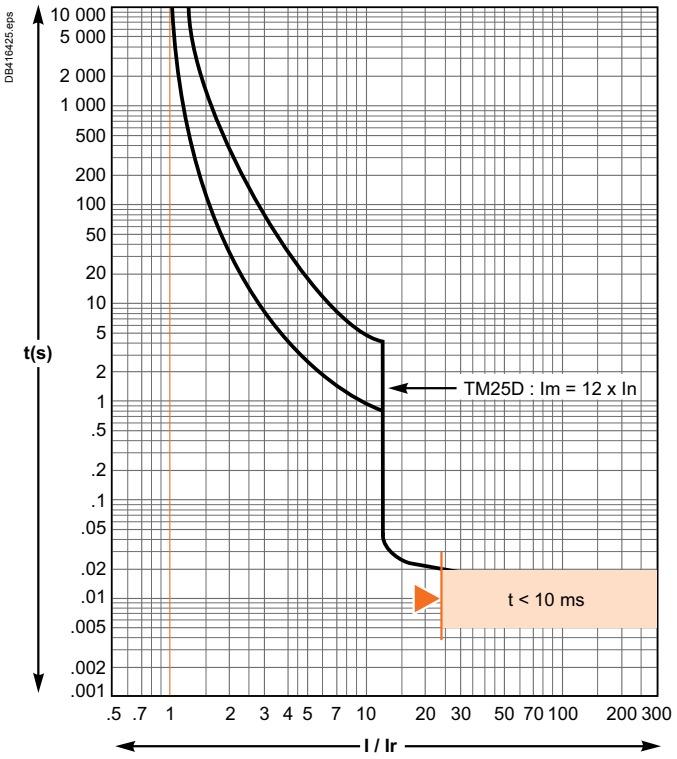

Reflex tripping.

TM32D

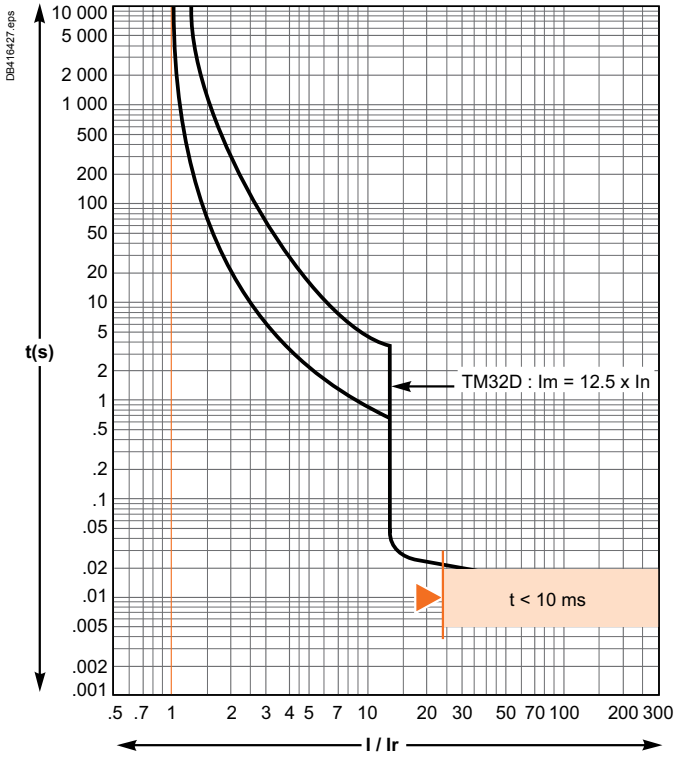

TM40D

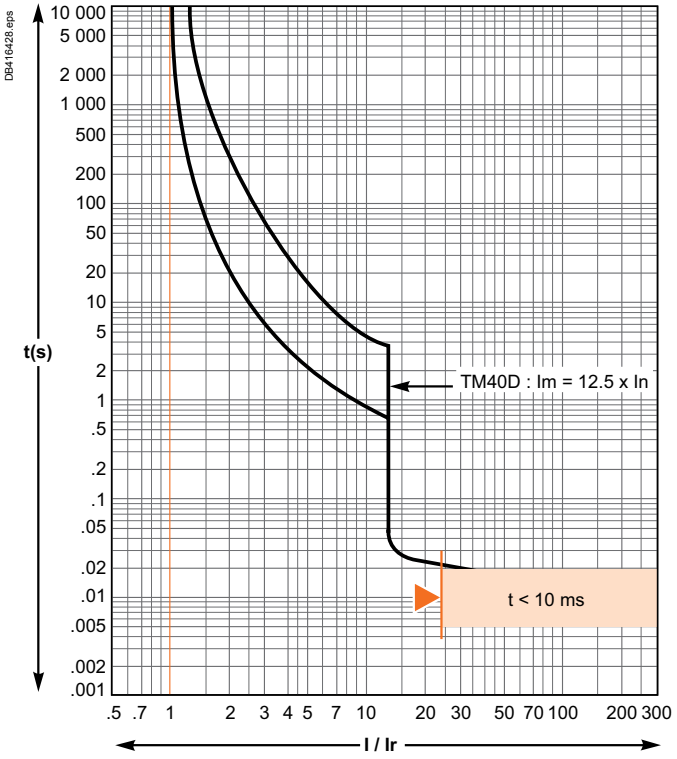

Reflex tripping.

Compact NSX100 to 250

TMD magnetic trip units, tripping curves

Protection of distribution systems

TM50D

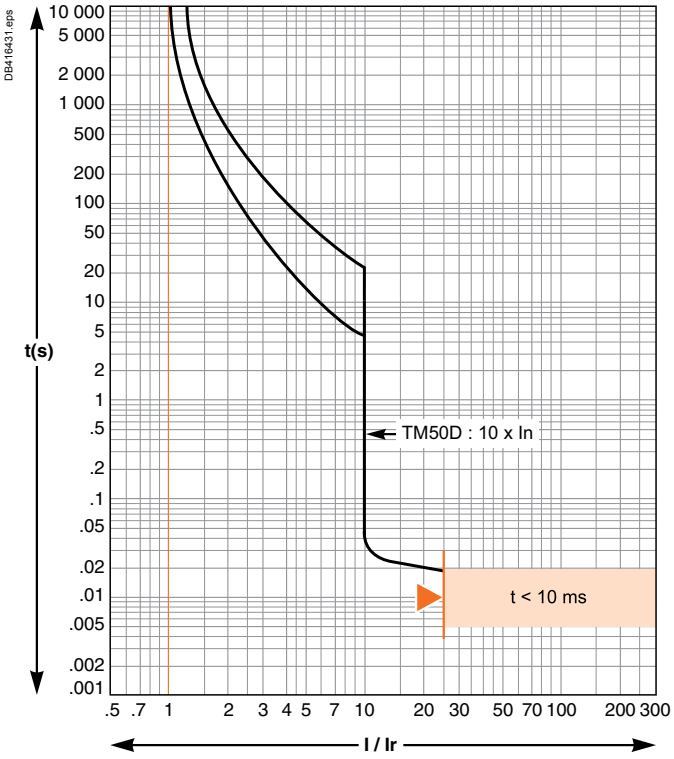

TM63D

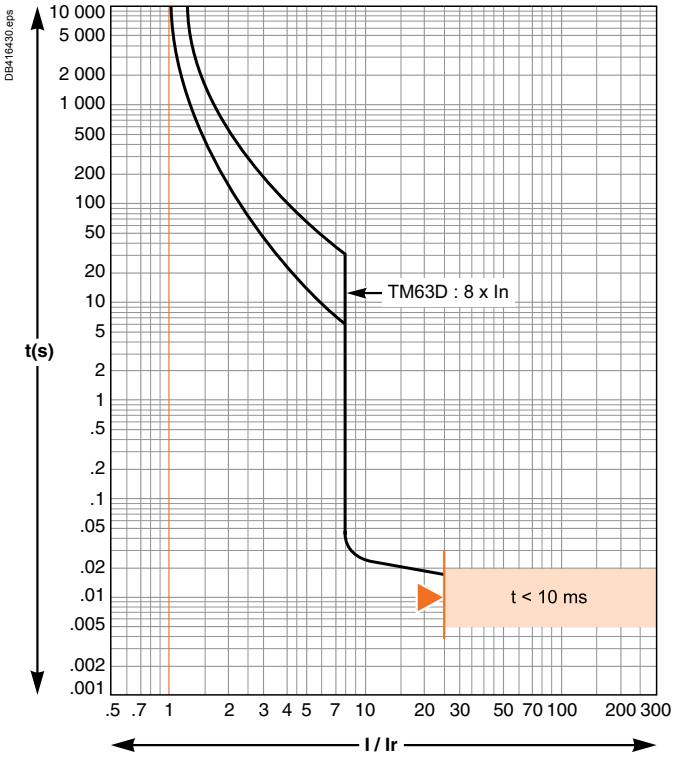

Reflex tripping.

TM80D / TM100D

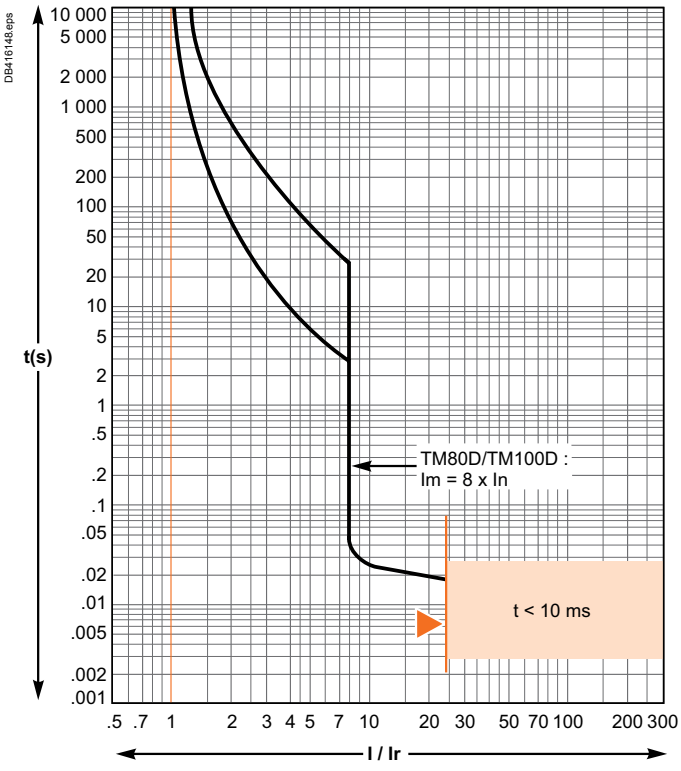

TM125D / TM160D

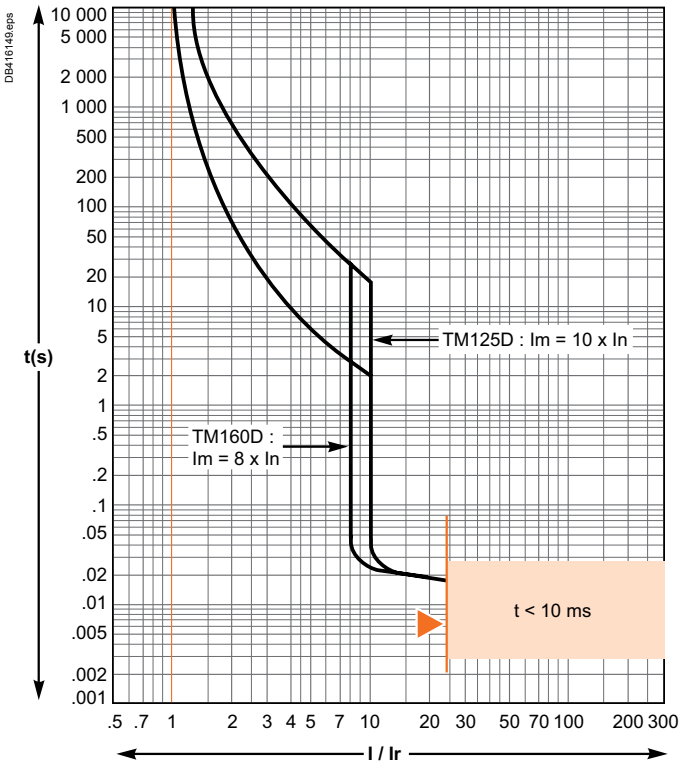

Reflex tripping.

Compact NSX100 to 250

TMD magnetic trip units, tripping curves

Protection of distribution systems

TM200D / TM250D

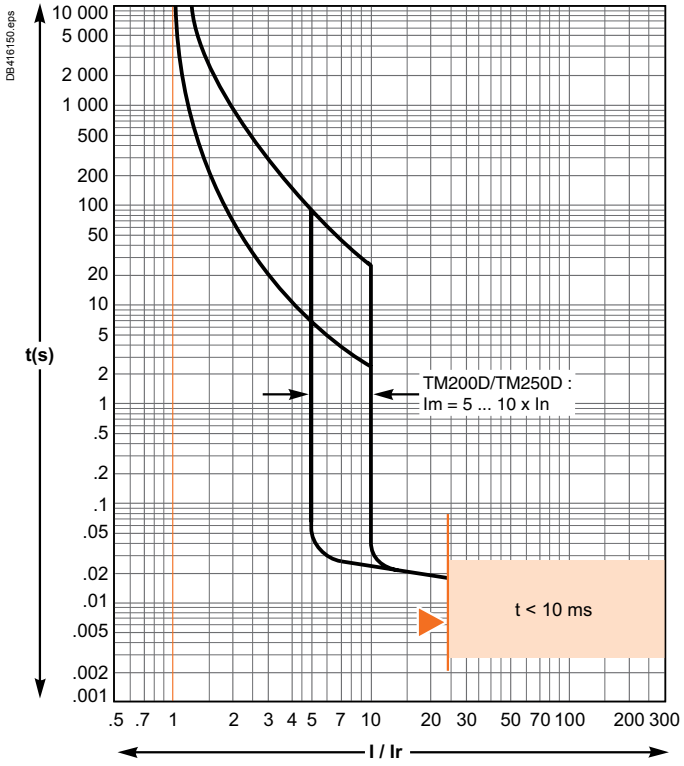

Reflex tripping.

Compact NSX100 to 250

TMG magnetic trip units, tripping curves

Protection of distribution systems

TM16G

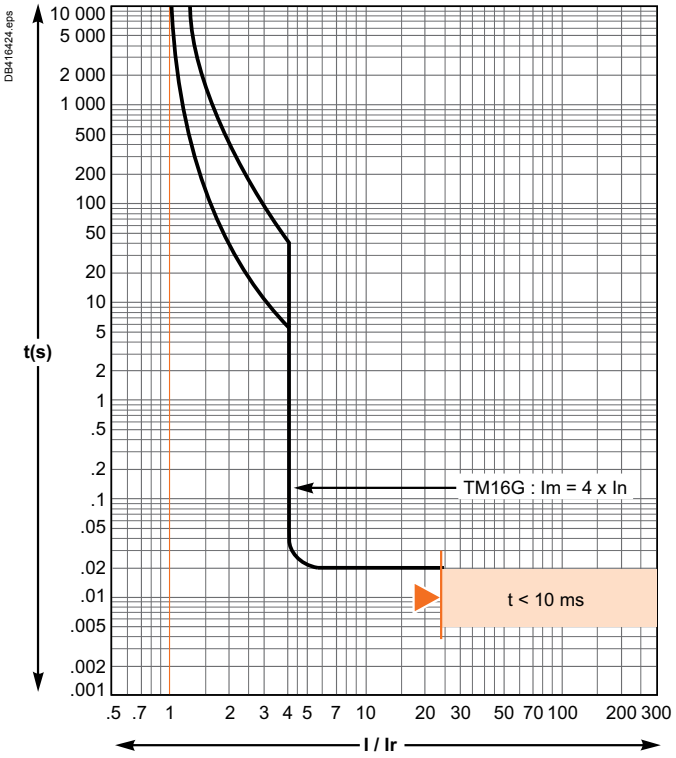

TM25G

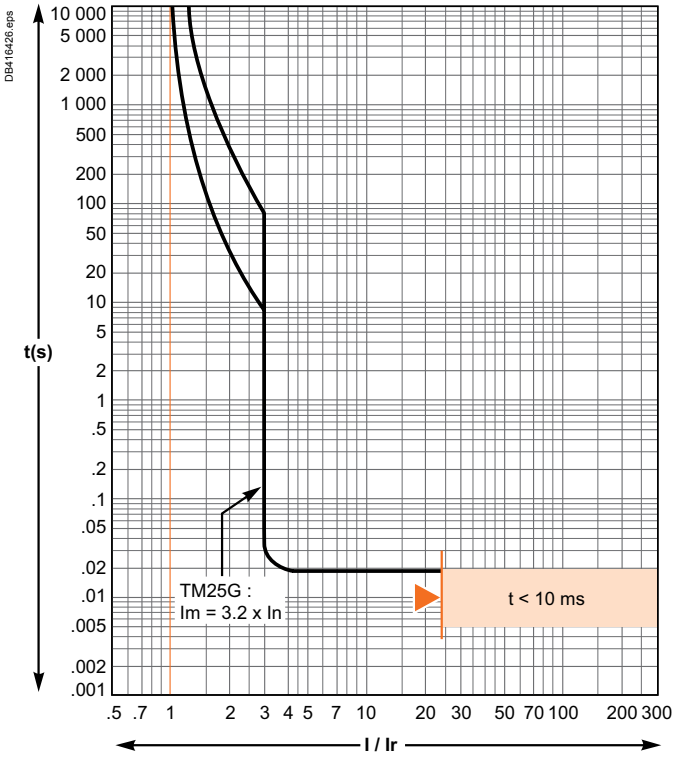

Reflex tripping.

TM40G

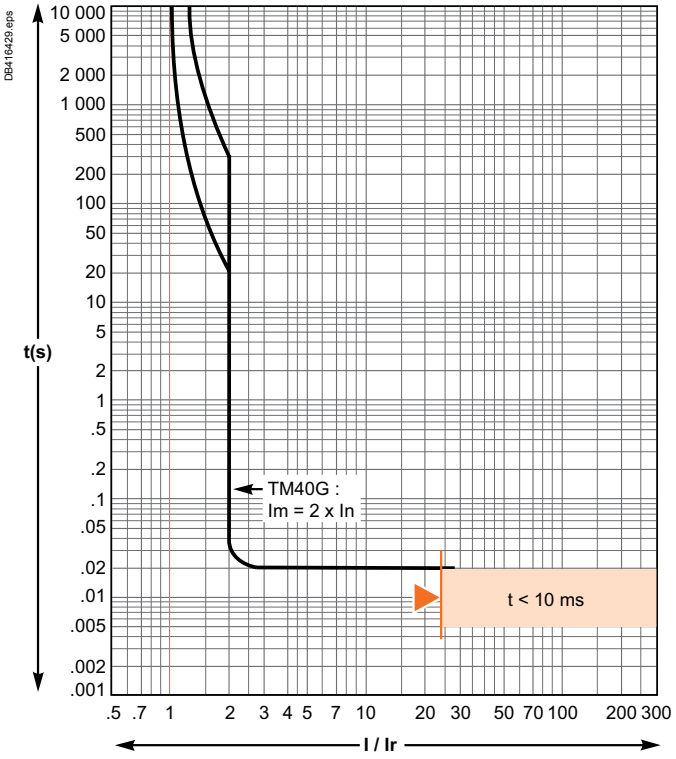

TM63G

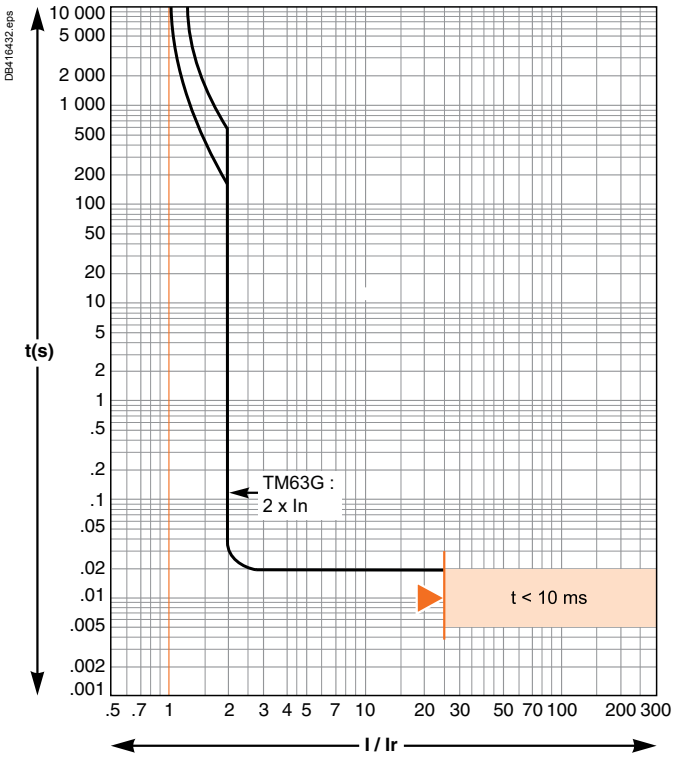

Reflex tripping.

Compact NSX100 to 250

TMG magnetic trip units, tripping curves

Protection of distribution systems

TM80G

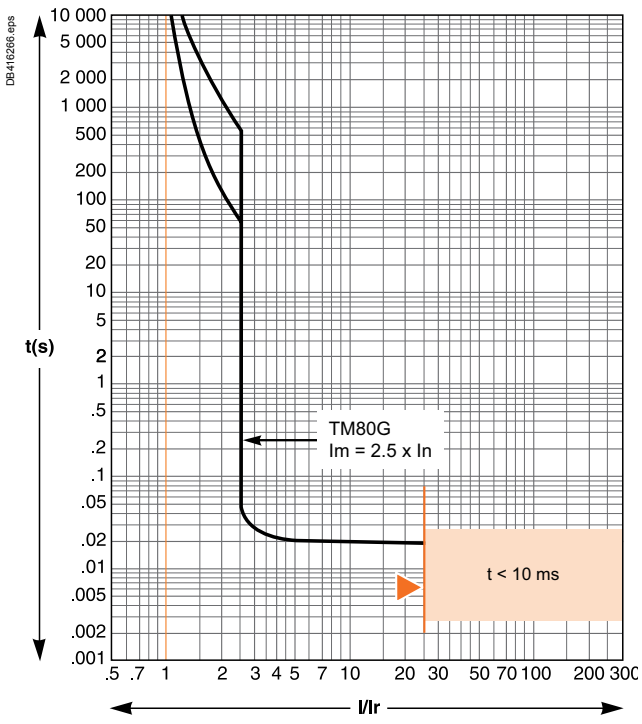

TM100G

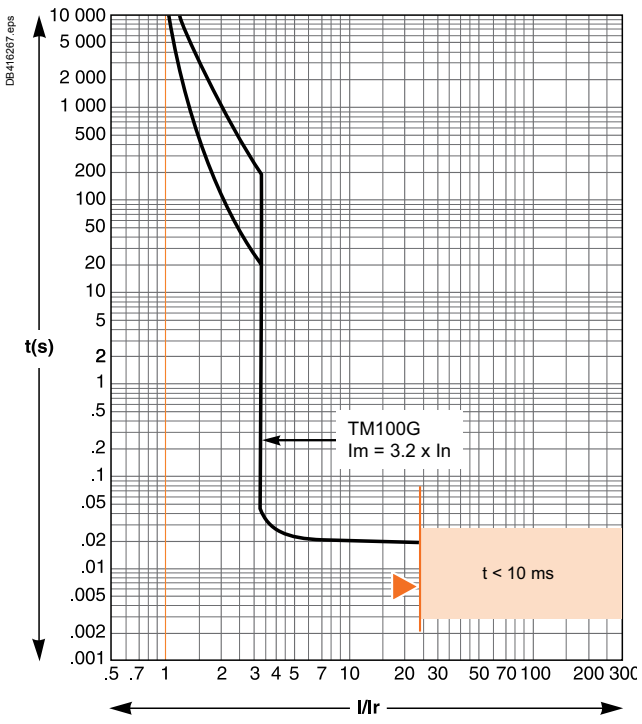

Reflex tripping.

TM125G

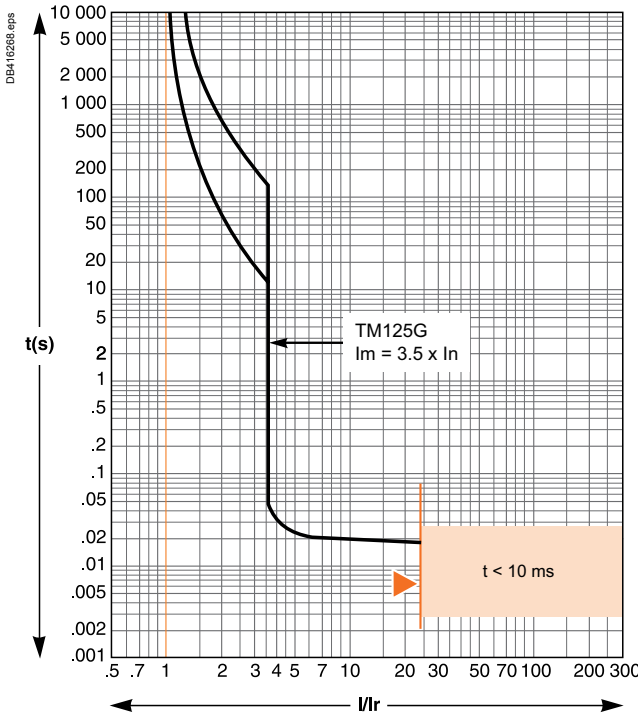

TM160G

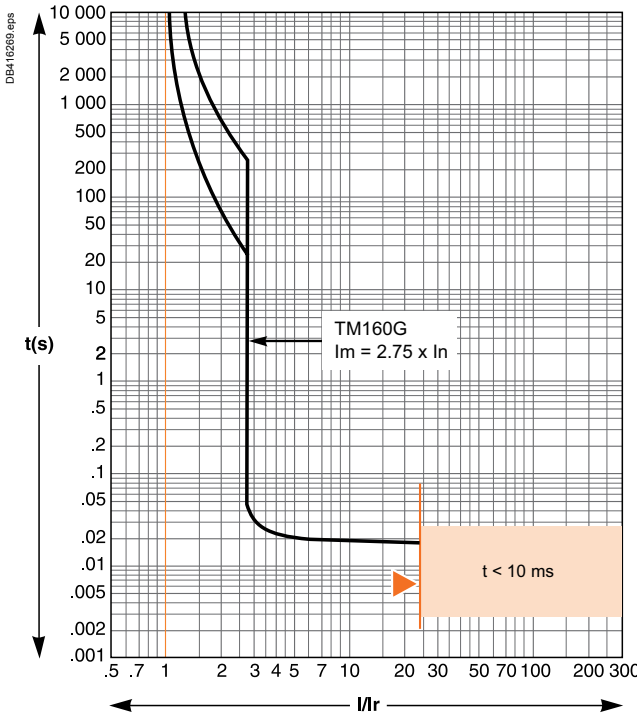

Reflex tripping.

Compact NSX100 to 250

TMG magnetic trip units, tripping curves

Protection of distribution systems

TM200G

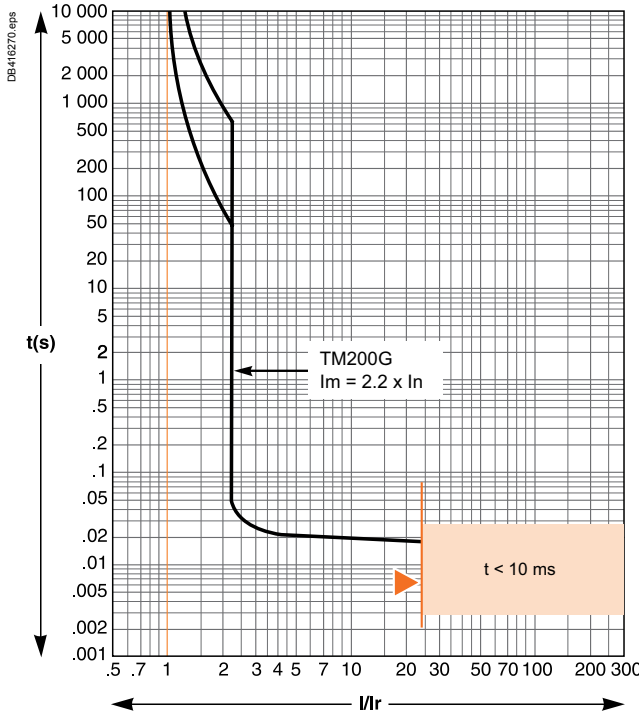

TM250G

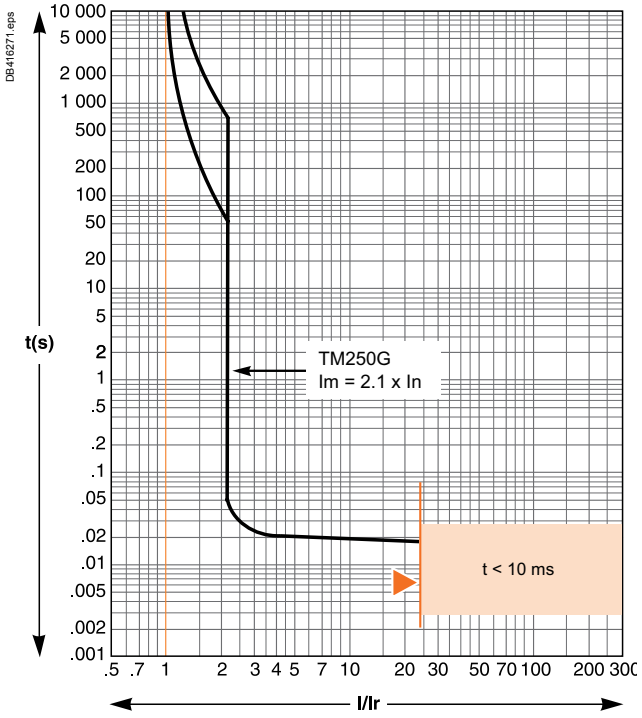

Reflex tripping.

Compact NSX100 to 250

Micrologic 2.2 and 2.2 G electronic trip units, tripping curves

Protection of distribution systems

Micrologic 2.2 - 40... 160 A

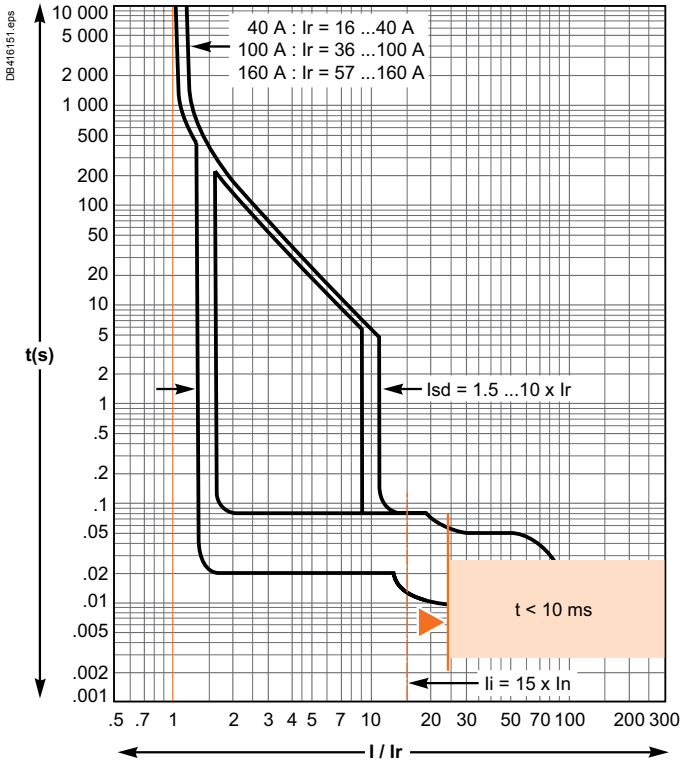

Micrologic 2.2 - 250 A

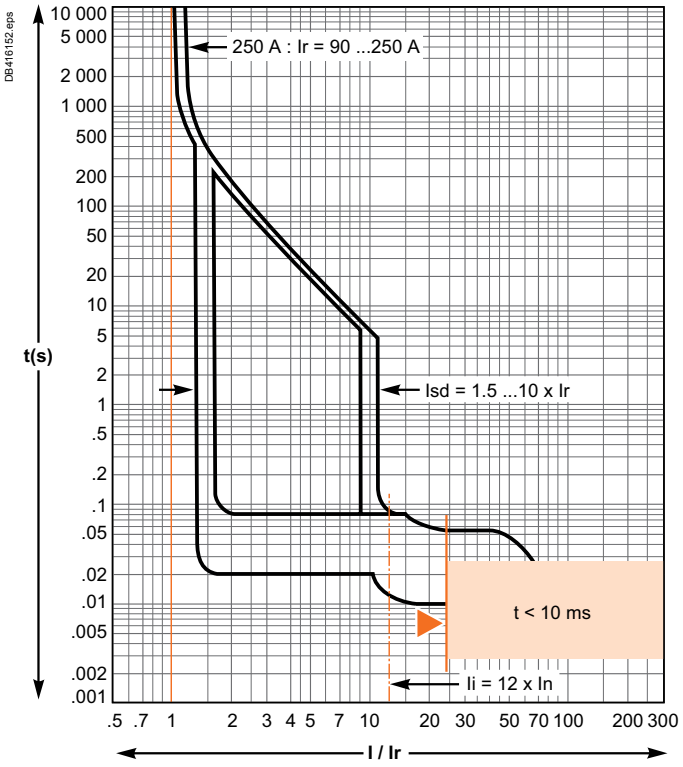

Reflex tripping.

Micrologic 2.2 G - 40... 160 A

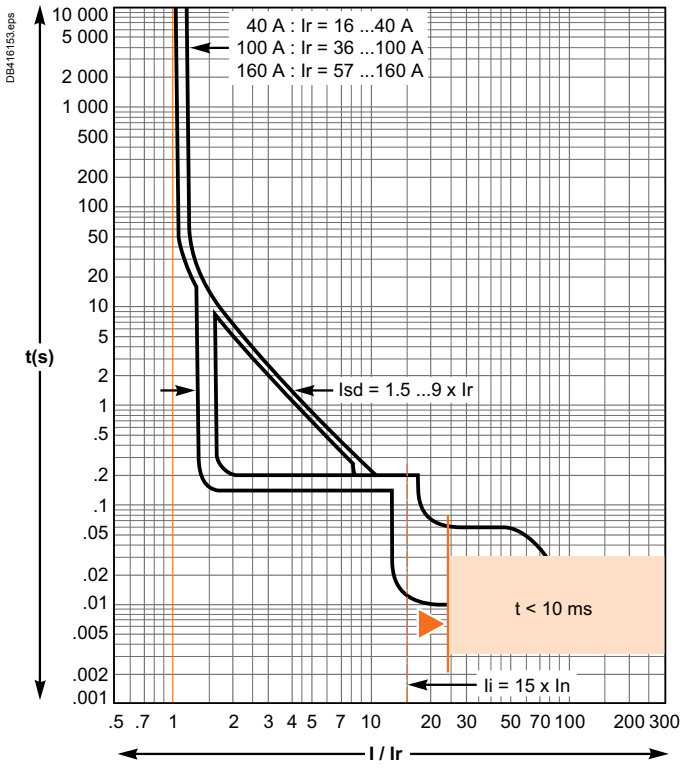

Micrologic 2.2 G - 250 A

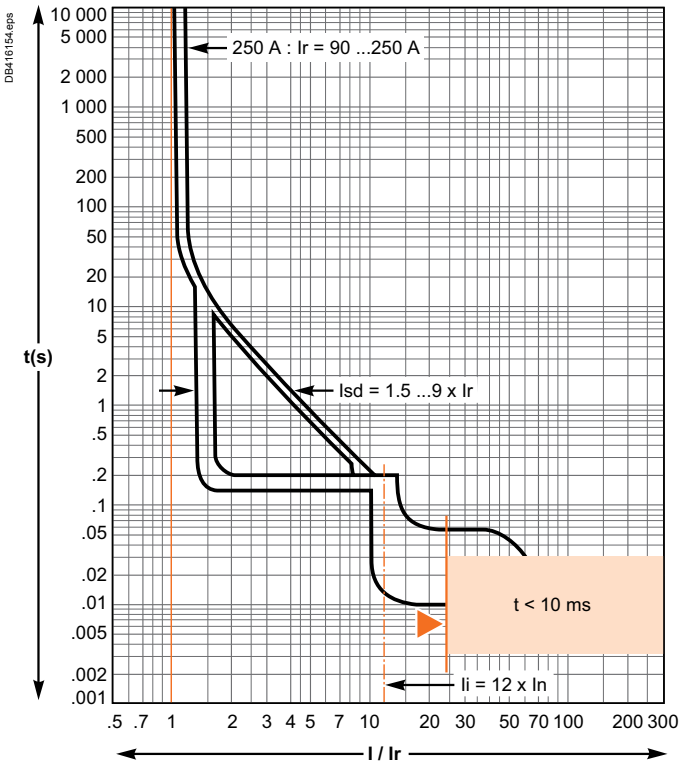

Reflex tripping.

Compact NSX100 to 250

Micrologic 5.2 and 6.2 A or E electronic trip units, tripping curves

Protection of distribution systems

Micrologic 5.2 and 6.2 A or E - 40... 160 A

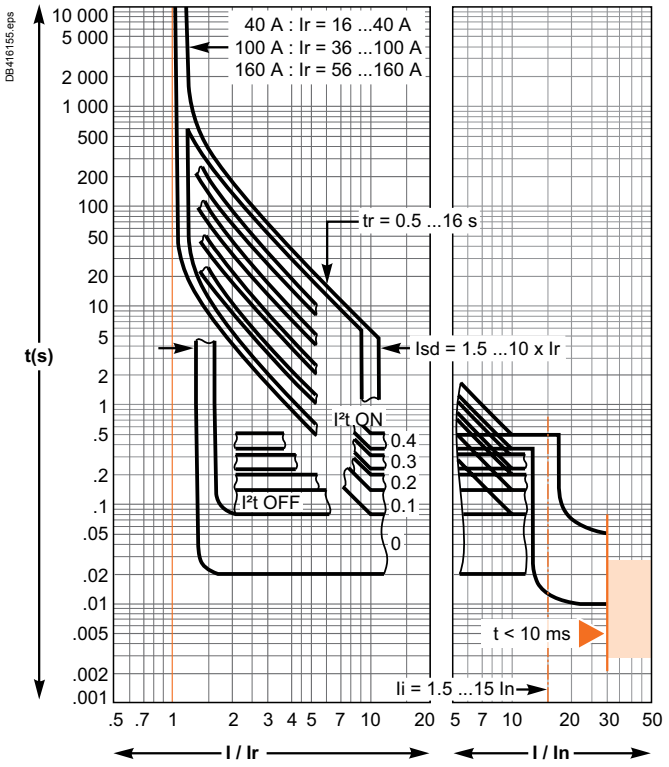

Reflex tripping.

Micrologic 5.2 and 6.2 A or E - 250 A

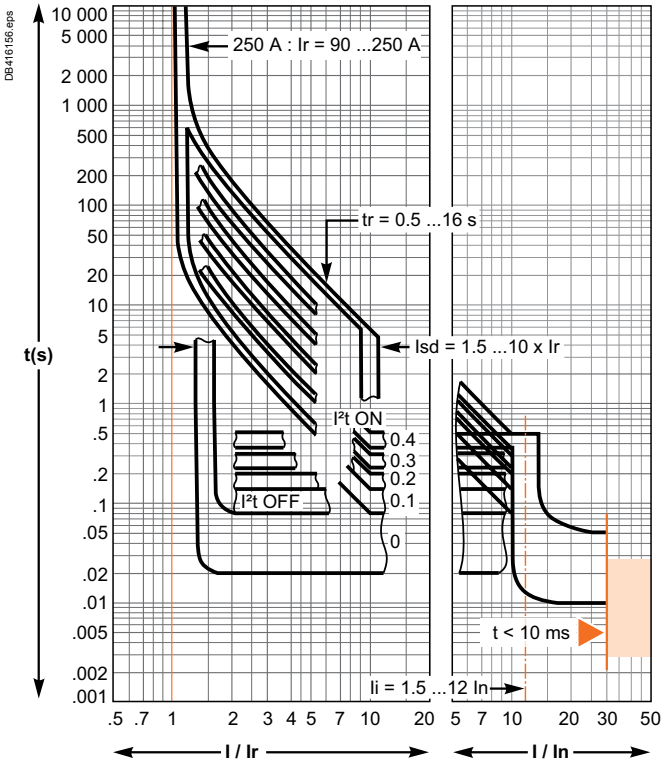

Micrologic 6.2 A or E (ground-fault protection)

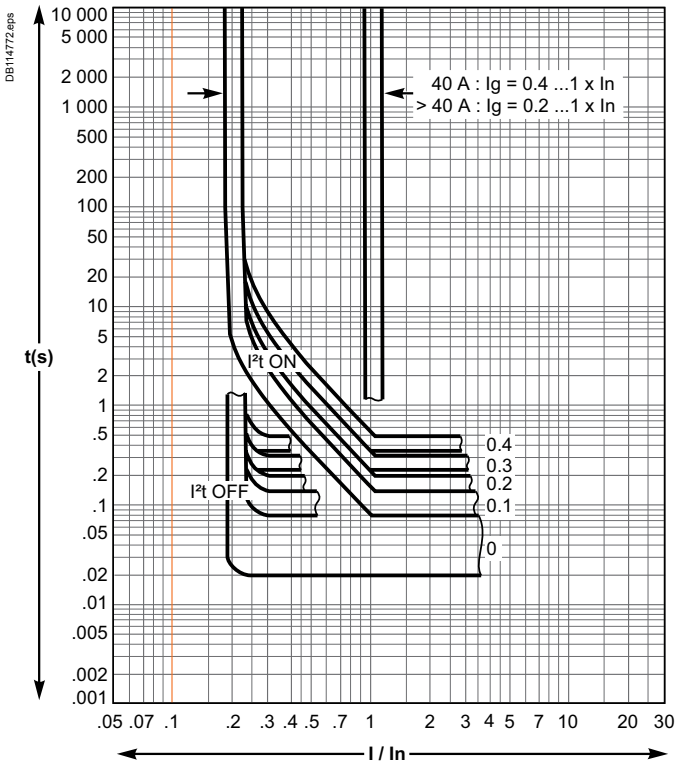

Compact NSX100 to 250

MA magnetic trip units, Micrologic 2.2 M electronic trip units, tripping curves

Motor protection

MA2.5... MA100

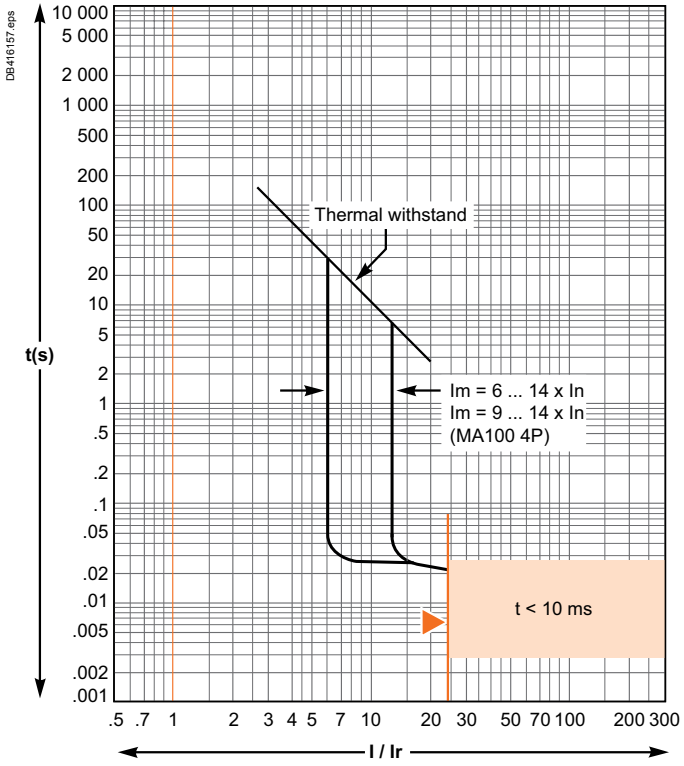

MA150 and MA220

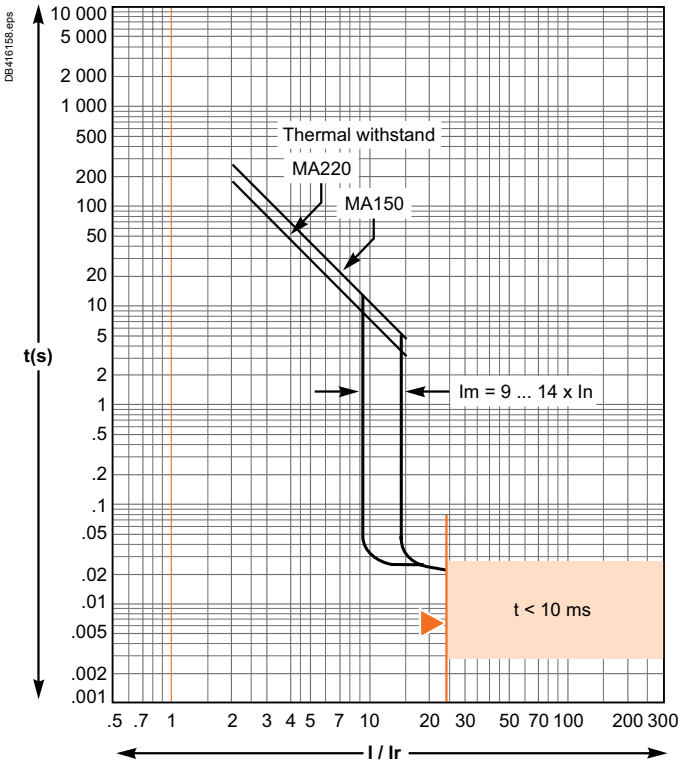

Reflex tripping.

Micrologic 2.2 M - 25 A

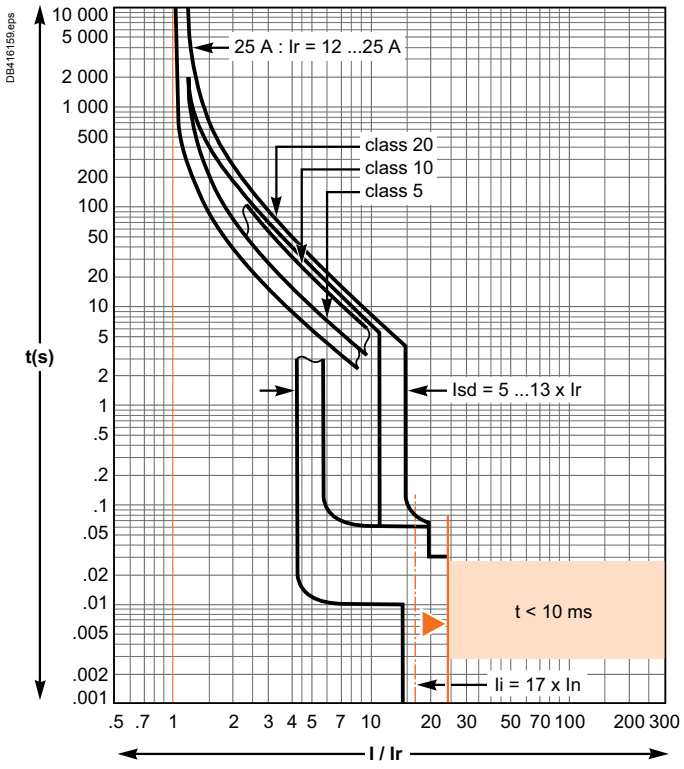

Micrologic 2.2 M - 50... 220 A

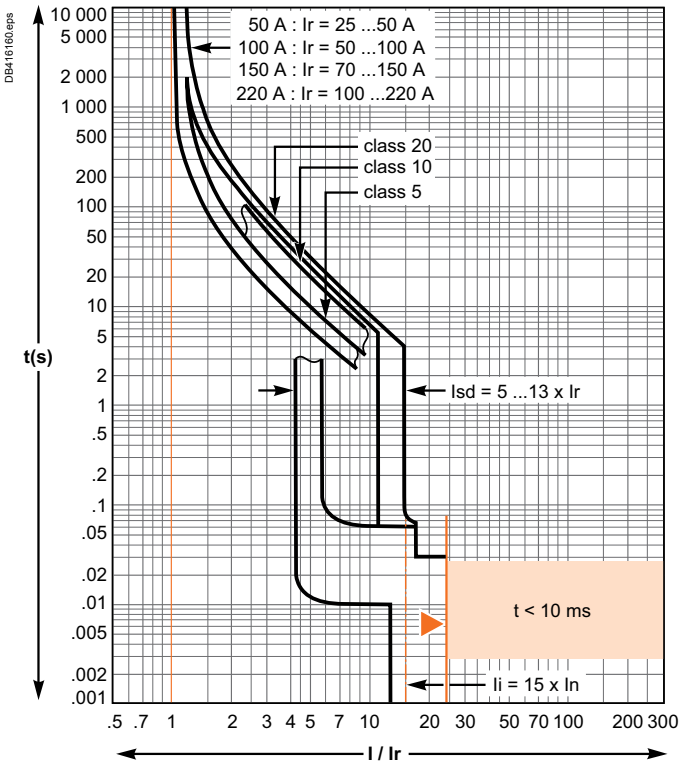

Reflex tripping.

Compact NSX100 to 250

Micrologic 6.2 E-M electronic trip units, tripping curves

Motor protection

Micrologic 6.2 E-M - 25 A

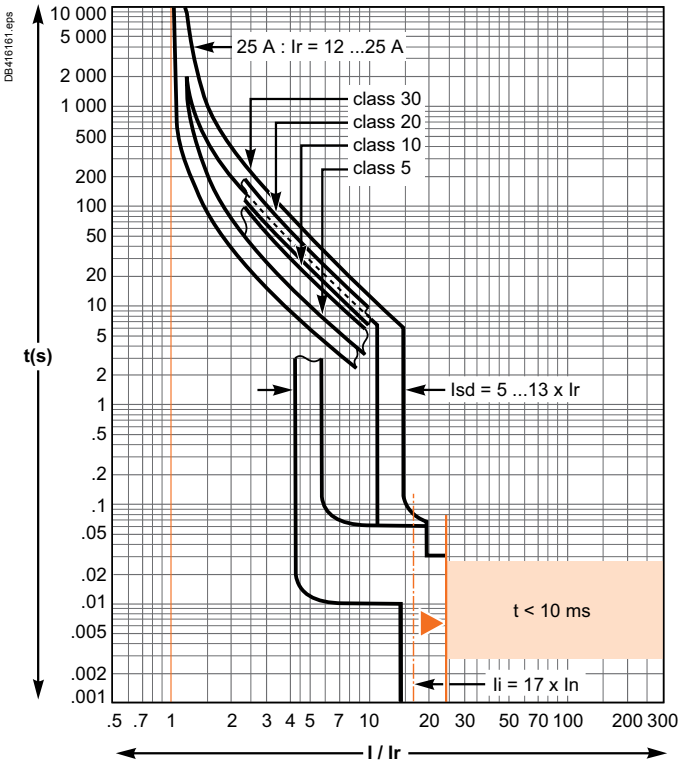

Micrologic 6.2 E-M - 50... 220 A

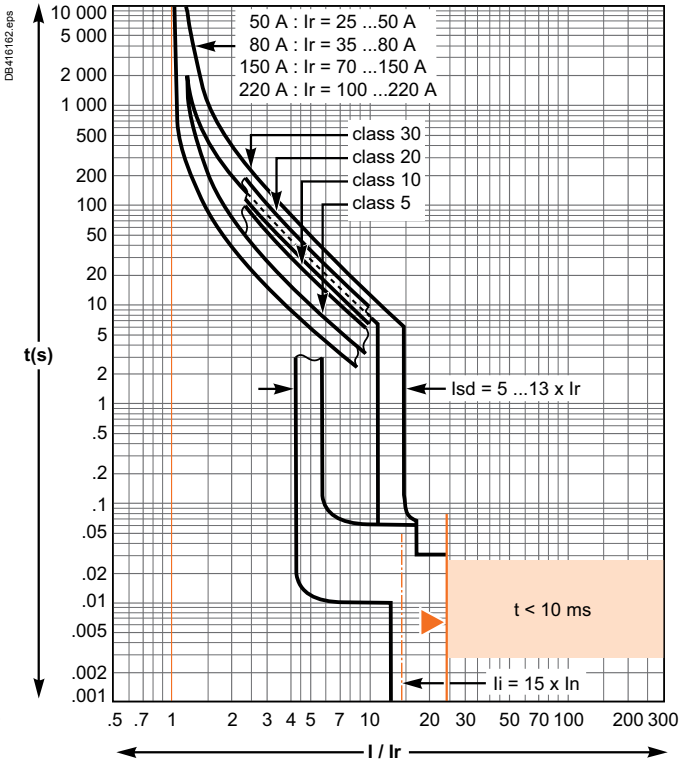

Reflex tripping.

Micrologic 6.2 E-M (ground-fault protection)

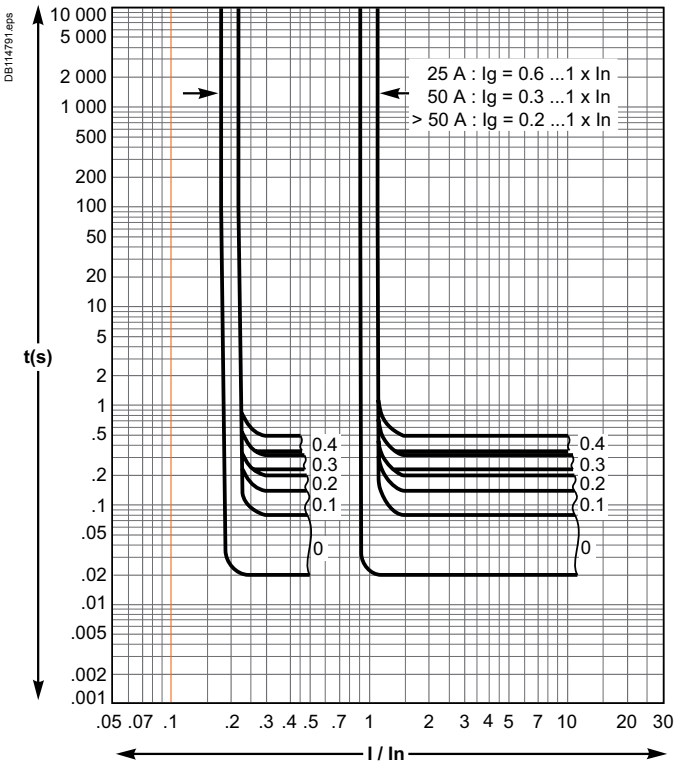

Compact NSX400 to 630

Micrologic 2.3, 5.3 and 6.3 A or E electronic trip units, tripping curves

Protection of distribution systems

Micrologic 2.3 - 250... 400 A

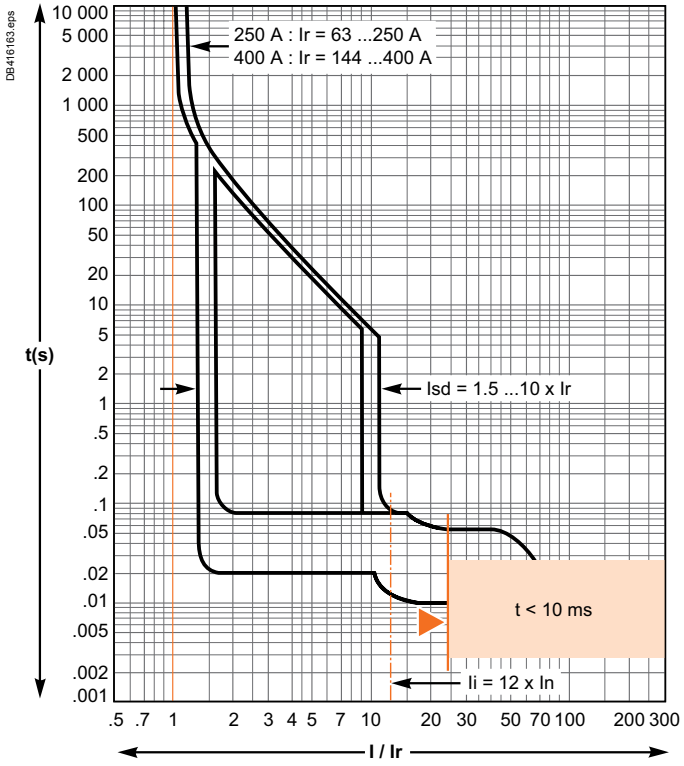

Micrologic 2.3 - 630 A

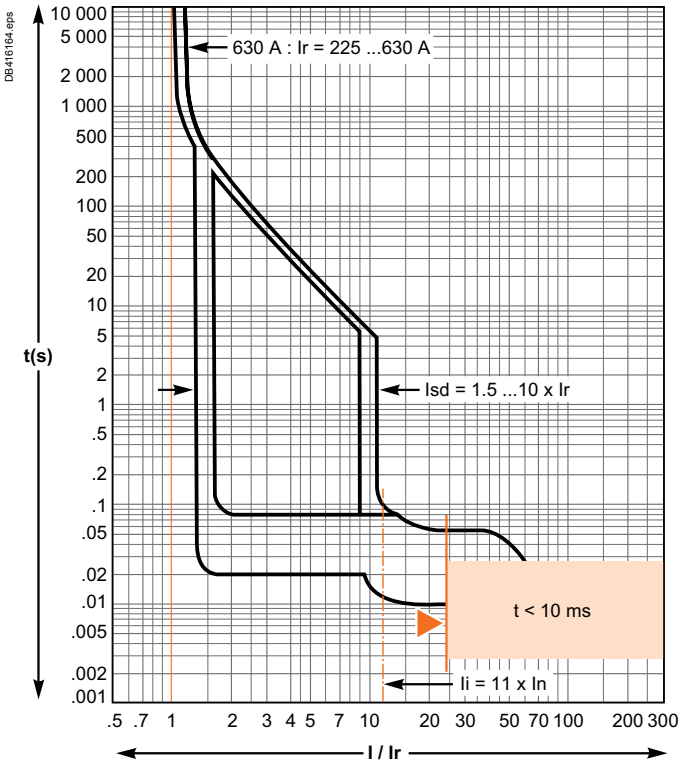

Reflex tripping.

Micrologic 5.3 and 6.3 A or E - 400 A

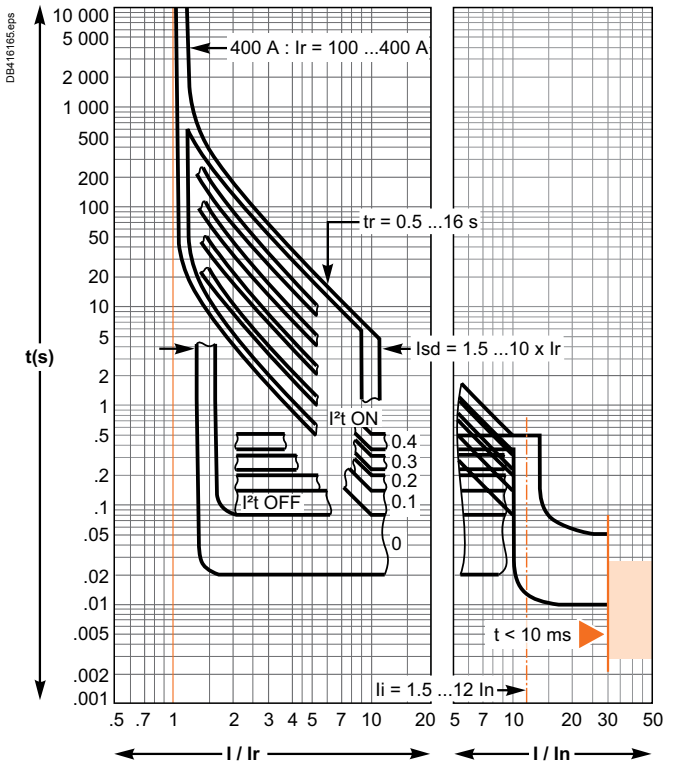

Micrologic 5.3 and 6.3 A or E - 630 A

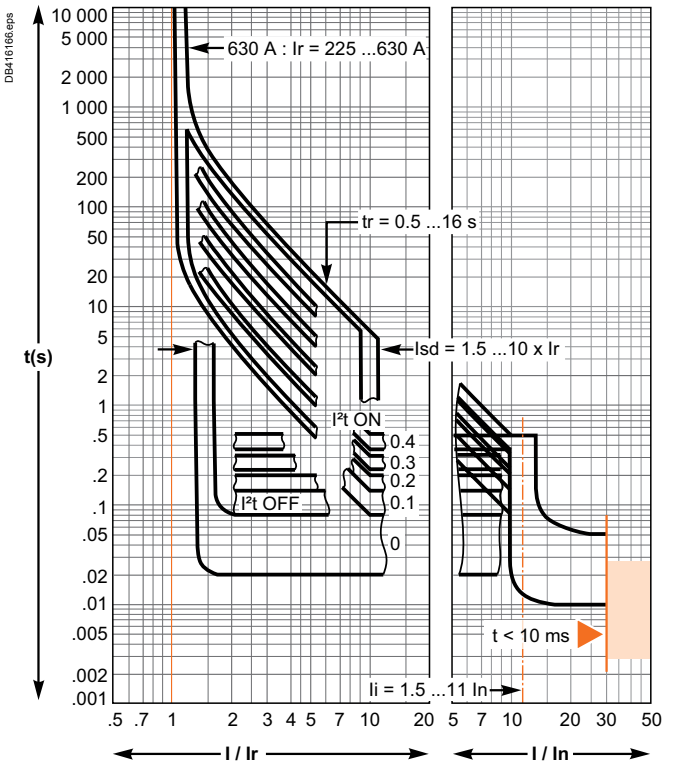

Reflex tripping.

Compact NSX400 to 630

Micrologic 6.3 A or E electronic trip units, tripping curves

Protection of distribution systems

Micrologic 6.3 A or E (ground-fault protection)

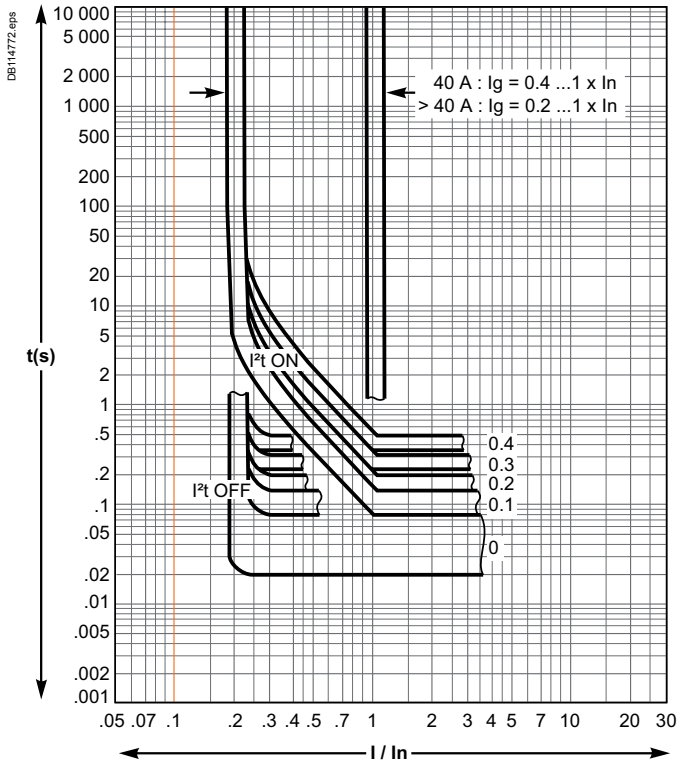

Compact NSX400 to 630

Micrologic 1.3 M and 2.3 M electronic trip units, tripping curves

Motor protection

Micrologic 1.3 M - 320 A

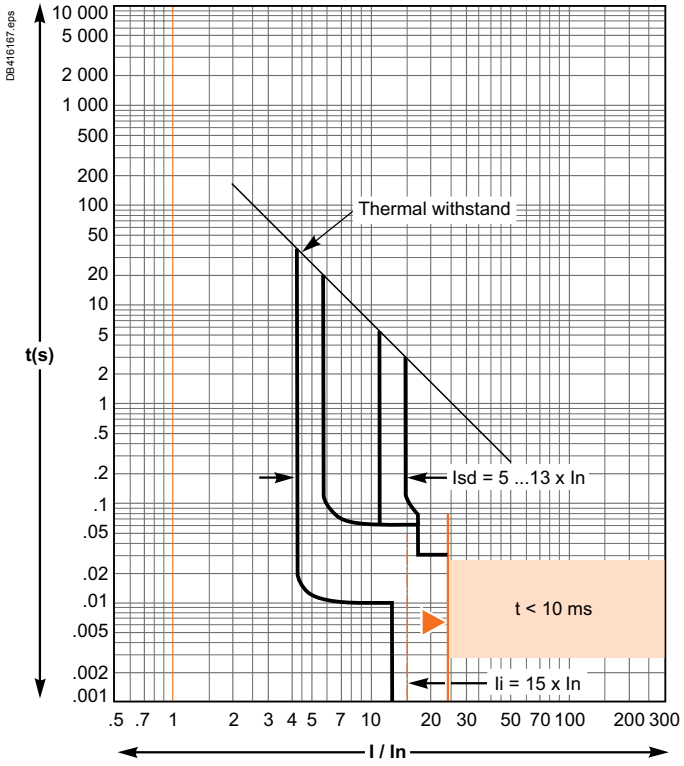

Micrologic 1.3 M - 500 A

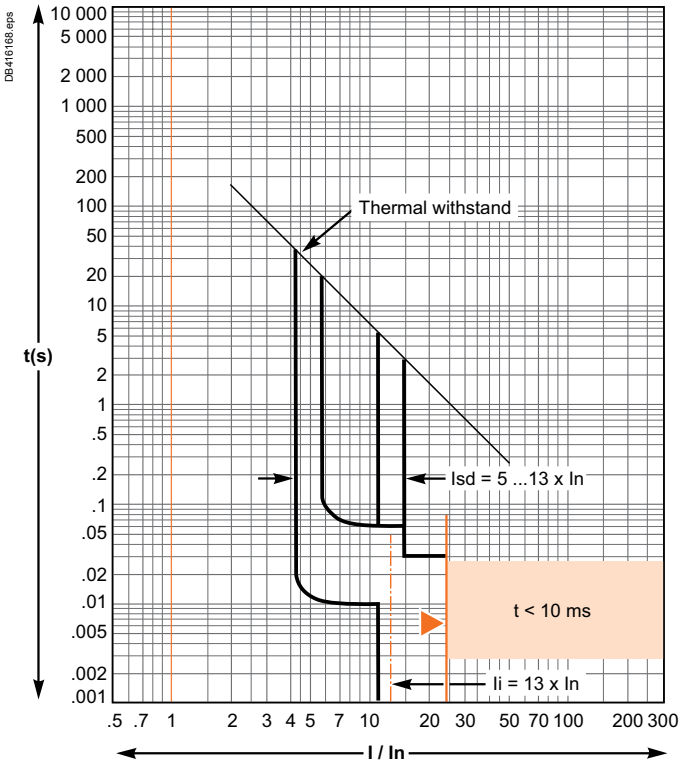

Reflex tripping.

Micrologic 2.3 M - 320 A

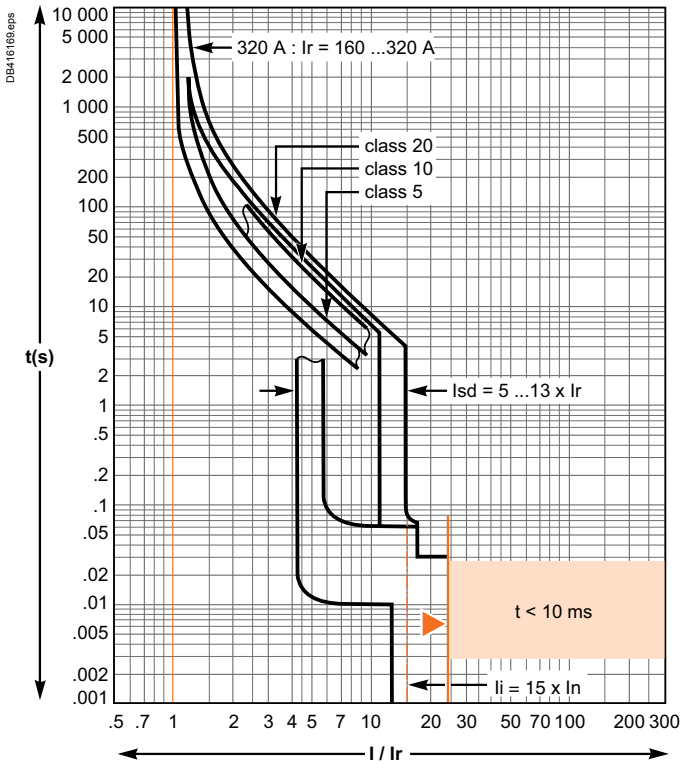

Micrologic 2.3 M - 500 A

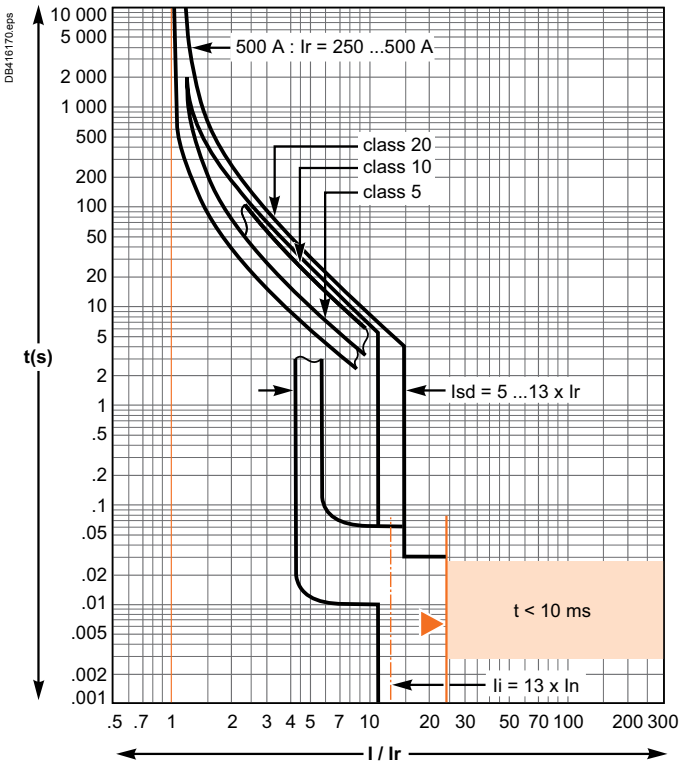

Reflex tripping.

Compact NSX400 to 630

Micrologic 6.3 E-M electronic trip units, tripping curves

Motor protection

Micrologic 6.3 E-M - 320 A

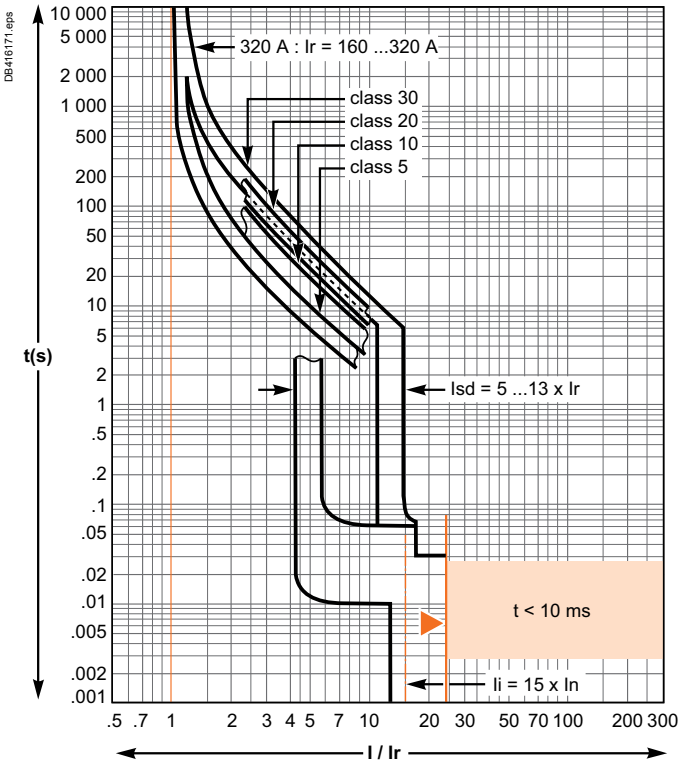

Micrologic 6.3 E-M - 500 A

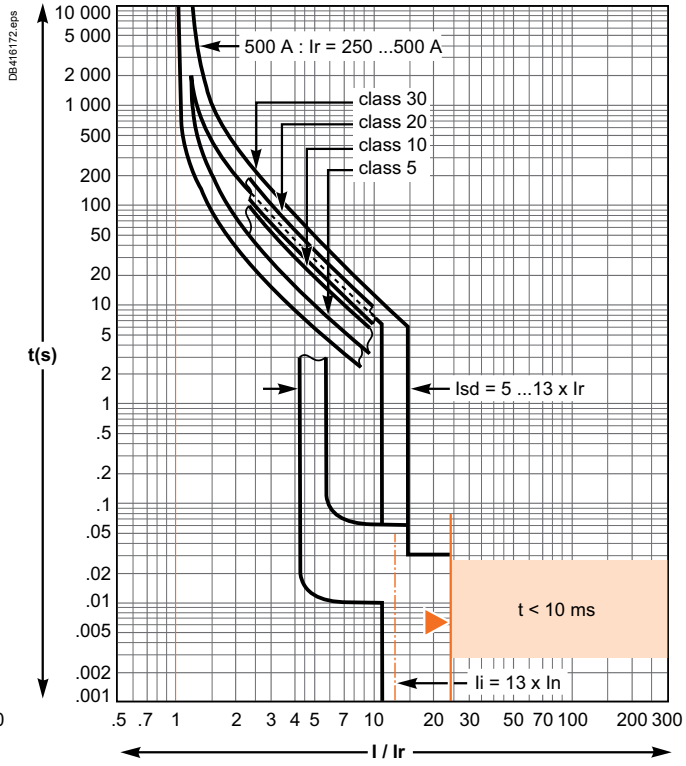

Reflex tripping.

Micrologic 6.3 E-M (ground fault protection)

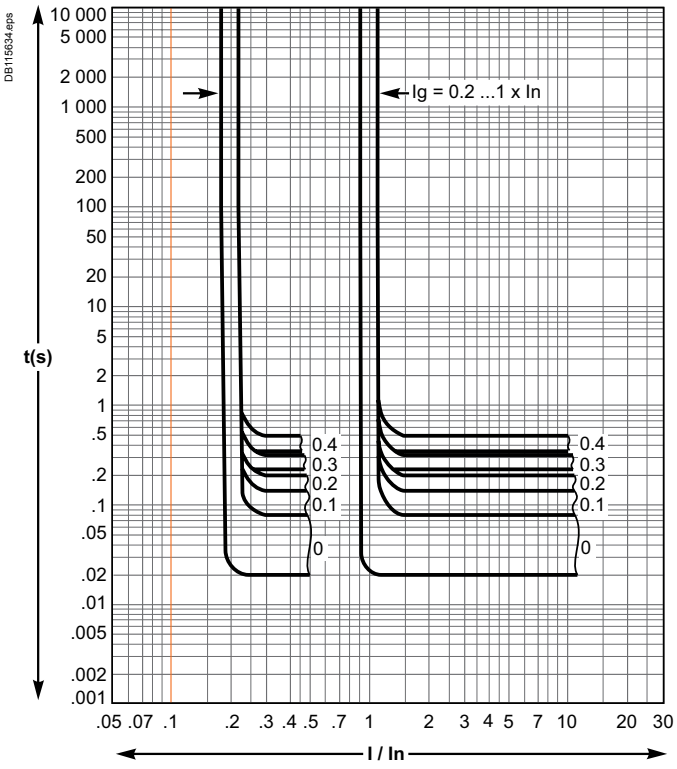

Tripping curves
Compact NSX100 to 630
Reflex tripping

Compact NSX100 to 630 devices incorporate the exclusive reflex-tripping system.
This system breaks very high fault currents.
The device is mechanically tripped via a "piston" actuated directly by the pressure produced in the breaking units by the short-circuit.
For high short-circuits, this system provides a faster break, thereby ensuring discrimination.
Reflex-tripping curves are exclusively a function of the circuit-breaker rating.

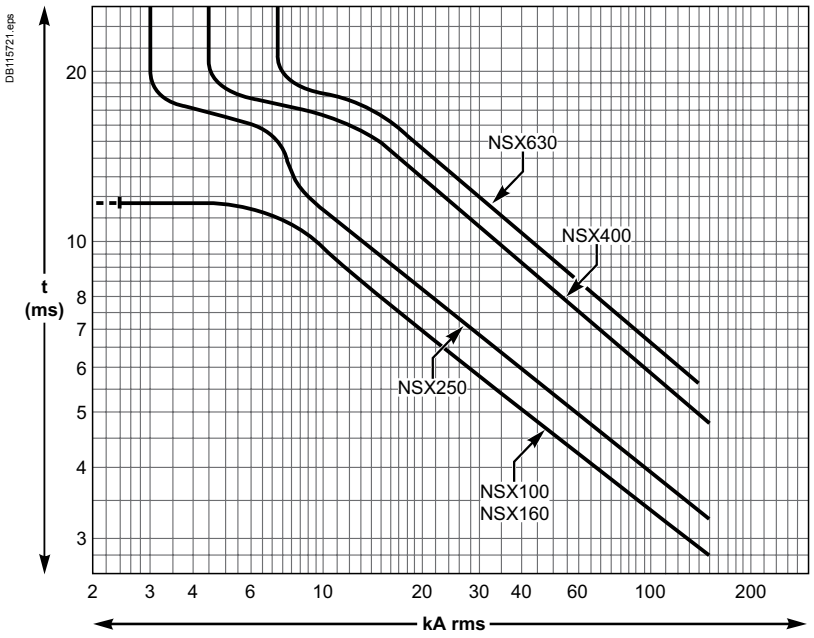

Current and energy limiting curves

The limiting capacity of a circuit breaker is its aptitude to let through a current, during a short-circuit, that is less than the prospective short-circuit current.

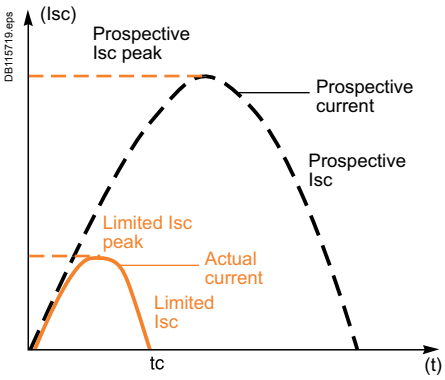

The exceptional limiting capacity of the Compact NSX range is due to the rotating double-break technique (very rapid natural repulsion of contacts and the appearance of two arc voltages in-series with a very steep wave front).

Ics = 100 % Icu

The exceptional limiting capacity of the Compact NSX range greatly reduces the forces created by fault currents in devices.
The result is a major increase in breaking performance.
In particular, the service breaking capacity Ics is equal to 100 % of Icu.
The Ics value, defined by IEC standard 60947-2, is guaranteed by tests comprising the following steps:

- break three times consecutively a fault current equal to 100 % of Icu
- check that the device continues to function normally, that is:
  - it conducts the rated current without abnormal temperature rise
  - protection functions perform within the limits specified by the standard
  - suitability for isolation is not impaired.

Longer service life of electrical installations

Current-limiting circuit breakers greatly reduce the negative effects of short-circuits on installations.

Thermal effects
Less temperature rise in conductors, therefore longer service life for cables.

Mechanical effects
Reduced electrodynamic forces, therefore less risk of electrical contacts or busbars being deformed or broken.

Electromagnetic effects
Fewer disturbances for measuring devices located near electrical circuits.

Economy by means of cascading

Cascading is a technique directly derived from current limiting. Circuit breakers with breaking capacities less than the prospective short-circuit current may be installed downstream of a limiting circuit breaker. The breaking capacity is reinforced by the limiting capacity of the upstream device. It follows that substantial savings can be made on downstream equipment and enclosures.

Current and energy limiting curves

The limiting capacity of a circuit breaker is expressed by two curves which are a function of the prospective short-circuit current (the current which would flow if no protection devices were installed):

- the actual peak current (limited current)
- thermal stress (A^2s), i.e. the energy dissipated by the short-circuit in a conductor with a resistance of 1 Ω.

Example
What is the real value of a 150 kA rms prospective short-circuit (i.e. 330 kA peak) limited by an NSX250L upstream ?
The answer is 30 kA peak (curve page E-18).

Maximum permissible cable stresses

The table below indicates the maximum permissible thermal stresses for cables depending on their insulation, conductor (Cu or Al) and their cross-sectional area (CSA). CSA values are given in mm^2 and thermal stresses in A^2s.

CSA		1.5 mm²	2.5 mm²	4 mm²	6 mm²	10 mm²
PVC	Cu	$2.97x10^4$	$8.26x10^4$	$2.12x10^5$	$4.76x10^5$	$1.32x10^6$
	Al					$5.41x10^5$
PRC	Cu	$4.10x10^4$	$1.39x10^5$	$2.92x10^5$	$6.56x10^5$	$1.82x10^6$
	Al					$7.52x10^5$
CSA		**16 mm²**	**25 mm²**	**35 mm²**	**50 mm²**	
PVC	Cu	$3.4x10^6$	$8.26x10^6$	$1.62x10^7$	$3.31x10^7$	
	Al	$1.39x10^6$	$3.38x10^6$	$6.64x10^6$	$1.35x10^7$	
PRC	Cu	$4.69x10^6$	$1.39x10^7$	$2.23x10^7$	$4.56x10^7$	
	Al	$1.93x10^6$	$4.70x10^6$	$9.23x10^6$	$1.88x10^7$	

Example
Is a Cu/PVC cable with a CSA of 10 mm^2 adequately protected by an NSX160F?
The table above indicates that the permissible stress is $1.32x10^6$ A^2s.
All short-circuit currents at the point where an NSX160F (Icu = 35 kA) is installed are limited with a thermal stress less than $6x10^5$ A^2s (curve page E-18).
Cable protection is therefore ensured up to the limit of the breaking capacity of the circuit breaker.

Current and energy limiting curves

Current-limiting curves

Voltage 400/440 V AC

Limited short-circuit current (kÂ peak)

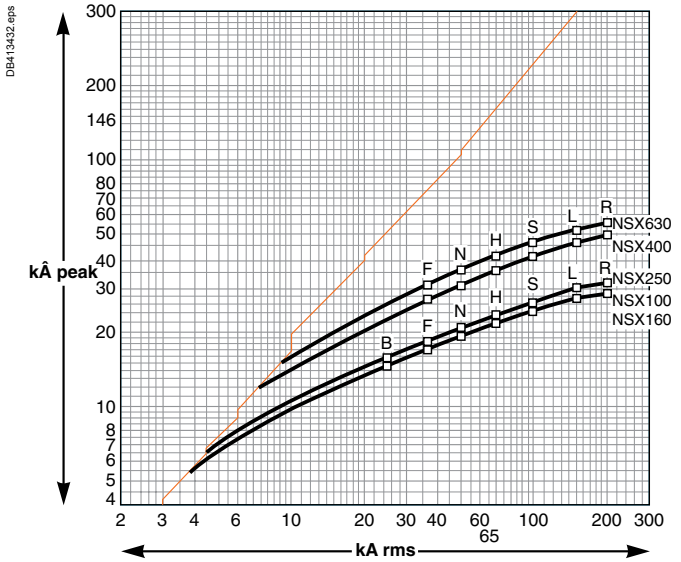

Voltage 660/690 V AC

Limited short-circuit current (kÂ peak)

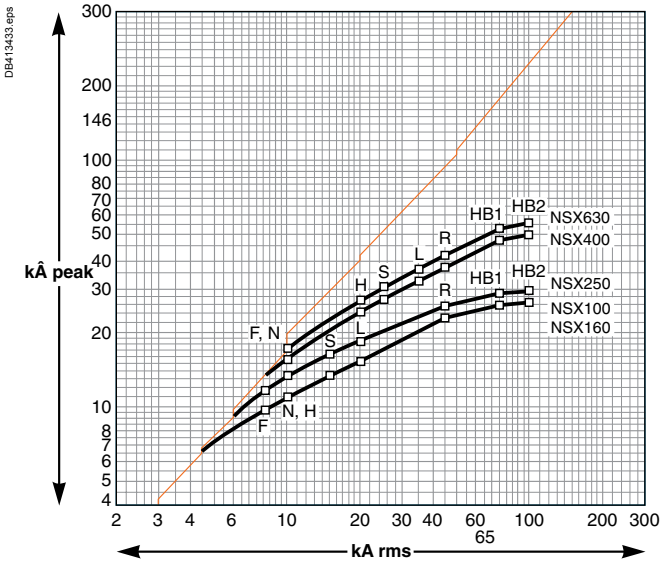

Energy-limiting curves

Voltage 400/440 V AC

Limited energy

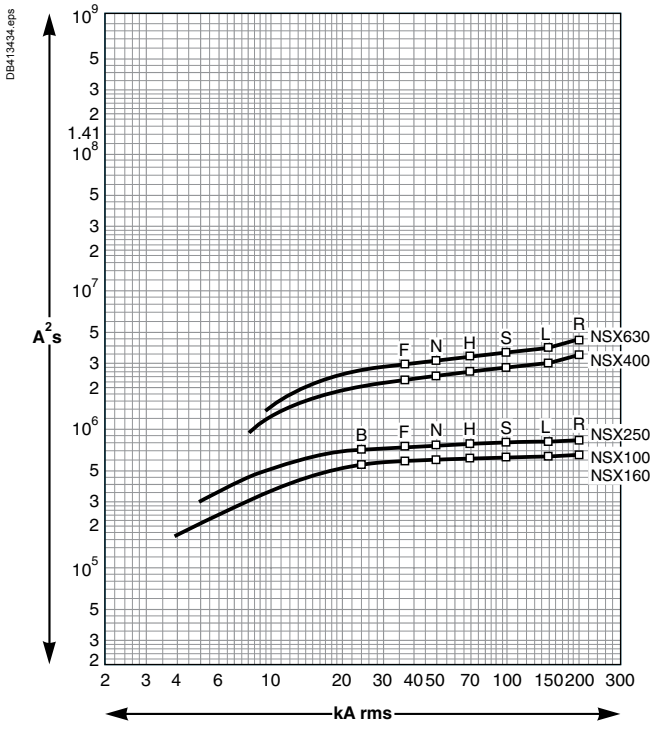

Voltage 660/690 V AC

Limited energy

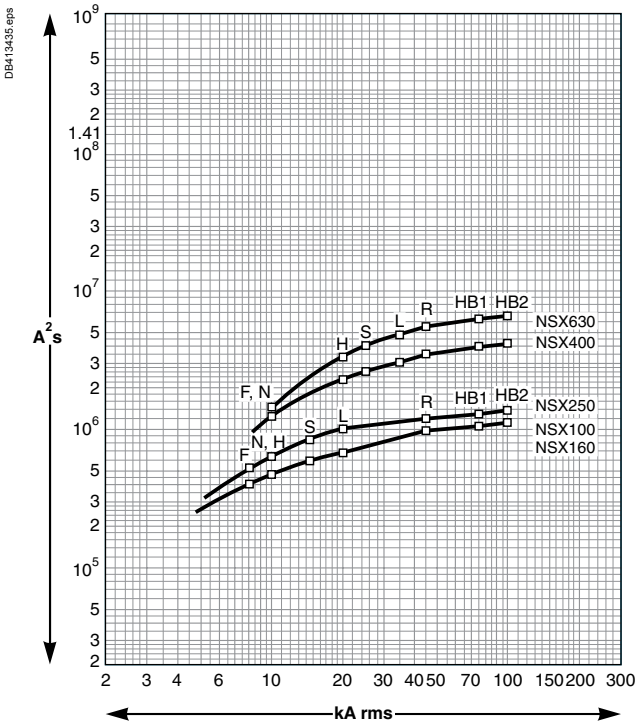

Glossary



Glossary
Contents

Functions and characteristics *A-1*
Installation recommendations *B-1*
Dimensions and connection *C-1*
Wiring diagrams *D-1*
Additional characteristics *E-1*

Accessories
Circuit-breaker characteristics (IEC 60947-2) **G-2**
Communication **G-4**
Components
Controls
Discrimination / Cascading **G-6**
Environment **G-7**
Harmonics **G-8**
Measurements **G-9**
Protection
Relays and auxiliary contacts **G-10**
Switchgear
Three-phase asynchronous motors and their protection **G-11**
Trip units **G-12**

Glossary

For each major section (Accessories, Switchgear, etc.) and for each item (Adapter for plug-in base, Connection terminal, etc.), this glossary provides:
- the page number in the concerned catalogue
- the reference standard
- the standardised IEC symbol
- the definition.

Text in quotation marks is drawn from the standards.

Accessories

Adapter for plug-in base ▶ A-86
The adapter is a plastic component that can be installed upstream and/or downstream of the plug-in base and enables use of all the connection accessories of the fixed device.

Bare-cable connector ▶ A-85
Conducting part of the circuit breaker intended for connection to power circuits. On Compact NSX, it is an aluminium part that screws to the connection terminals of the circuit breaker. There are one or more holes (single or multiple cable connector) for the ends of bare cables.

Connection terminals ▶ A-84
Flat copper surface, linked to the conducting parts of the circuit breaker and to which power connections are made using bars, connectors or lugs.

One-piece spreader ▶ A-84
The spreader is a plastic component with copper connectors that can be installed upstream and/or downstream of a Compact NSX100 to 250 circuit breaker with a pole pitch of 35 mm. It increases the pitch of the circuit-breaker terminals to the 45 mm pitch of a NSX400/630 device to facilitate connection of large cables.

Spreaders ▶ A-84
Set of three (3P device) or four (4P) flat, conducting parts made of aluminium. They are screwed to the circuit-breaker terminals to increase the pitch between poles.

Circuit-breaker characteristics (IEC 60947-2)

Breaking capacity ▶ A-6
Value of prospective current that a switching device is capable of breaking at a stated voltage under prescribed conditions of use and behaviour. Reference is generally made to the ultimate breaking capacity (Icu) and the service breaking capacity (Ics).

Degree of protection (IP)
IEC 60529 ▶ A-3
Defines device protection against the penetration of solid objects and liquids, using two digits specified in standard IEC 60259. Each digit corresponds to a level of protection, where 0 indicates no protection.
■ First digit (0 to 6): protection against penetration of solid foreign objects.
1 corresponds to protection against objects with a diameter > 50 mm, 6 corresponds to total protection against dust.
■ Second digit (0 to 8): protection against penetration of liquids (water).
1 corresponds to protection against falling drops of water (condensation),
8 corresponds to continuous immersion.
The enclosure of Compact NSX circuit breakers provides a minimum of IP40 (protection against objects > 1 mm) and can reach IP56 (protection against dust and powerful water jets) depending on the installation conditions.

Degree of protection against external mechanical impacts (IK) ▶ A-6
Defines the aptitude of an object to resist mechanical impacts on all sides, indicated by a number from 0 to 10 (standard IEC 62262). Each number corresponds to the impact energy (in Joules) that the object can handle according to a standardised procedure.
0 corresponds to no protection, 1 to an impact energy of 0.14 Joules, 10 to an impact energy of 20 Joules. Compact NSX provide IK07 (2 Joules) and can provide IK08 (5 Joules) depending on the installation conditions.

Durability ▶ A-6
The term "durability" is used in the standards instead of "endurance" to express the expectancy of the number of operating cycles which can be performed by the equipment before repair or replacement of parts. The term "endurance" is used for specifically defined operational performance.

Electrical durability
IEC 60947-1 ▶ A-6
With respect to its resistance to electrical wear, equipment is characterised by the number of on-load operating cycles, corresponding to the service conditions given in the relevant product standard, which can be made without re replacement.

Frame size	▶ A-84	"A term designating a group of circuit breakers, the external physical dimensions of which are common to a range of current ratings. Frame size is expressed in amperes corresponding to the highest current rating of the group. Within a frame size, the width may vary according to the number of poles. This definition does not imply dimensional standardisation." Compact NSX has two frame sizes covering 100 to 250 A and 400 to 630 A.
Insulation class	▶ A-3	Defines the type of device insulation in terms of earthing and the corresponding safety for user, in one of three classes. ■ Class I. The device is earthed. Any electrical faults, internal or external, or caused by the load, are cleared via the earthing circuit, thus ensuring user safety. ■ Class II. The device is not connected to a protective conductor. User safety is ensured by reinforced insulation around the live parts (an insulating case and no contact with live parts, i.e. plastic buttons, moulded connections, etc.) or double insulation. ■ Class III. The device may be connected only to SELV (safety extra-low voltage) circuits. The Compact NSX are class II devices (front) and may be installed through the door in class II switchboards (standards IEC 61140 and IEC 60664-1), without reducing insulation, even with a rotary handle or motor mechanism module.
Making capacity		Value of prospective making current that a switching device is capable of making at a stated voltage under prescribed conditions of use and behaviour. Reference is generally made to the short-circuit making capacity Icm.
Maximum break time	▶ A-17	Maximum time after which breaking is effective, i.e. the contacts separated and the current completely interrupted.
Mechanical durability	▶ A-6	With respect to its resistance to mechanical wear, equipment is characterised by the number of no-load operating cycles which can be effected before it becomes necessary to service or replace any mechanical parts.
Non-tripping time	▶ A-19	This is the minimum time during which the protective device does not operate in spite of pick-up overrun, if the duration of the overrun does not exceed the corresponding voluntary time delay.
Pollution degree of environment conditions IEC 60947-1 IEC 60664-1	▶ A-6	"Conventional number based on the amount of conductive or hygroscopic dust, ionised gas or salt and on the relative humidity and its frequency of occurrence, resulting in hygroscopic absorption or condensation of moisture leading to reduction in dielectric strength and/or surface resistivity". Standard IEC 60947-1 distinguishes four pollution degrees. ■ Degree 1. No pollution or only dry, non-conductive pollution occurs. ■ Degree 2. Normally, only non-conductive pollution occurs. Occasionally, however, a temporary conductivity caused by condensation may be expected. ■ Degree 3. Conductive pollution occurs, or dry, non-conductive pollution occurs which becomes conductive due to condensation. ■ Degree 4. The pollution generates persistent conductivity caused, for instance, by conductive dust or by rain or snow. Compact NSX meets degree 3, which corresponds to industrial applications.
Prospective short-circuit current	▶ E-13	Current that would flow through the poles if they remained fully closed during the short-circuit.
Rated current (In)	▶ A-6	This is the current that the device can carry continuously with the contacts closed and without abnormal temperature rise.
Rated impulse withstand voltage (Uimp)	▶ A-6	"The peak value of an impulse voltage of prescribed form and polarity which the equipment is capable of withstanding without failure under specified conditions of test and to which the values of the clearances are referred. The rated impulse withstand voltage of an equipment shall be equal to or higher than the values stated for the transient overvoltages occurring in the circuit in which the equipment is fitted".
Rated insulation voltage (Ui)	▶ A-6	"The rated insulation voltage of an equipment is the value of voltage to which dielectric tests and creepage distances are referred. In no case shall the maximum value of the rated operational voltage exceed that of the rated insulation voltage".
Rated operational current (Ie)		"A rated operational current of an equipment is stated by the manufacturer and takes into account the rated operational voltage, the rated frequency, the rated duty, the utilisation category and the type of protective enclosure, if appropriate".
Rated operational voltage (Ue)	▶ A-6	"A value of voltage which, combined with a rated operational current, determines the application of the equipment and to which the relevant tests and the utilisation categories are referred. For multipole equipment, it is generally stated as the voltage between phases". This is the maximum continuous voltage at which the equipment may be used.

Glossary

Rated short-time withstand current (Icw)

"Value of short-time withstand current, assigned to the equipment by the manufacturer, that the equipment can carry without damage, under the test conditions specified in the relevant product standard". Generally expressed in kA for 0.5, 1 or 3 seconds. This is an essential characteristic for air circuit breakers. It is not significant for moulded-case circuit breakers for which the design targets fast opening and high limiting capacity.

Service breaking capacity (Ics) ▶ A-6

Expressed as a percentage of Icu, it provides an indication on the robustness of the device under severe conditions. It is confirmed by a test with one opening and one closing/opening at Ics, followed by a check that the device operates correctly at its rated current, i.e. 50 cycles at In, where temperature rise remains within tolerances and the protection system suffers no damage.

Short-circuit making capacity (Icm) ▶ A-72

Value indicating the capacity of the device to make and carry a high current without repulsion of the contacts. It is expressed in kA peak.

Suitability for isolation ▶ A-3
(see also Positive contact indication, page G-5)

This capability means that the circuit breaker meets the conditions below.
■ In the open position, it must withstand, without flashover between the upstream and downstream contacts, the impulse voltage specified by the standard as a function of the Uimp indicated on the device.
■ It must indicate contact position by one or more of the following systems:
□ position of the operating handle
□ separate mechanical indicator
□ visible break of the moving contacts
■ Leakage current between each pole, with the contacts open, at a test voltage of 1.1 x the rated operating voltage, must not exceed:
□ 0.5 mA per pole for new devices
□ 2 mA per pole for devices already subjected to normal switching operations
□ 6 mA, the maximum value that must never be exceeded.
■ It must not be possible to install padlocks unless the contacts are open. Locking in the closed position is permissible for special applications. Compact NSX complies with this requirement by positive contact indication.

Suitable for isolation with positive contact indication ▶ A-3
(see also Suitability for isolation, page G2)

Suitability for isolation is defined here by the mechanical reliability of the position indicator of the operating mechanism, where:
■ the isolation position corresponds to the O (OFF) position
■ the operating handle cannot indicate the "OFF" position unless the contacts are effectively open.
The other conditions for isolation must all be fulfilled:
■ locking in the open position is possible only if the contacts are effectively open
■ leakage currents are below the standardised limits
■ overvoltage impulse withstand between upstream and downstream connections.

Ultimate breaking capacity (Icu) ▶ A-6

Expressed in kA, it indicates the maximum breaking capacity of the circuit breaker. It is confirmed by a test with one opening and one closing/opening at Icu, followed by a check that the circuit is properly isolated. This test ensures user safety.

Communication

Acti 9 Smartlink Ethernet ▶ A-31

Acti 9 Smartlink Ethernet collects data from Smartlink Modbus and transfers them via the Ethernet network.

Acti 9 Smartlink Modbus ▶ A-31

Acti 9 Smartlink Modbus is used to transfer data from Acti 9 devices to a PLC or monitoring system via the communication system: Modbus serial line.

BSCM ▶ A-33
(Breaker status and control module)

The optional BSCM for Compact NSX is used to acquire device status indications and control the communicating remote-control function. It includes a memory used to manage the maintenance indicators. It serves as a converter between the analogue outputs of the device indication contacts (O/F, SD, SDE) and the digital communicating functions.

Com'X 200 energy server ▶ A-31

Com'X 200 energy server is a compact, plug-and-play data logger that merges seamlessly with the Smart Panels energy management solution. It consolidates inputs from analogue environmental sensors (e.g. temperature), digital readers (e.g. pulsed signals from smart energy or water meters, load running hours), and energy management equipment running over the Modbus protocol.
Designed for ease of implementation, data can be transmitted securely via Ethernet, Wi-Fi, or GPRS to any energy management platforms. The Com'X 200 energy server is scalable and can be easily adaptable to accommodate future upgrades. Com'X 200 is a perfect fit with our energy management services, enabling visualisation, tracking, and analysis of energy data to support optimisation of energy performance and cost management.

https://electroshaili.com/

Ethernet TCP/IP
(Transmission Control Protocol / Internet Protocol)
▶ A-30
Ethernet is a very common network protocol and complies with IEEE standard 802.3. Ethernet TCP/IP is the protocol that brings web functions to Ethernet networks. Most PCs have an Ethernet 10/100 card (10 or 100 Mbit/s) for connection to the internet. Data communicated from Compact NSX via Modbus are accessible on a PC via a TCP/IP-Modbus gateway such as MPS100 or EGX100.

FDM121 switchboard display
▶ A-26
An FDM121 switchboard display unit can be connected to a ULP IMU using a prefabricated cord to display all measurements, alarms, histories and event tables, maintenance indicators, management of installed devices on a screen. The result is a veritable 96 x 96 mm Power Meter.
The FMD121 display unit requires a 24 V DC power supply.
The FDM121 is a switchboard display unit that can be integrated in the Compact NSX100 to 630 A, Powerpact H/J/L/P/R, Compact NS or Masterpact systems.

FDM128 switchboard display
▶ A-28
The FDM128 is a large display, but requires very little depth. The anti-glare graphic screen is backlit for very easy reading even under poor ambient lighting and at sharp angles.

IFE Ethernet interface,
IFE Ethernet interface + gateway
▶ A-34
The IFE Ethernet interface for LV circuit breaker enables an intelligent modular unit (IMU), for example a Masterpact NT/NW or Compact NSX circuit breaker to be connected to an Ethernet network.

IFM Module interface Modbus
▶ A-36
This module required for connection to the network, contains the Modbus address (1 to 99) declared by the user via the two dials in front. It automatically adapts (baud rate, parity) to the Modbus network in which it is installed.
It is equipped with a lock-out switch to enable or disable operations involving writing to Micrologic, i.e. reset, counter reset, setting modifications, device opening and closing commands, etc. There is a built-in test function to check the connections of the Modbus interface module with the Micrologic and FDM121 display unit.

I/O application module
▶ A-38
The I/O (Input/Output) application module for LV breaker is part of an ULP system with built-in functionalities and applications to enhance the application needs.
The ULP system architecture can be built without any restrictions using the wide range of circuit breakers.
The I/O application module is compliant with the ULP system specifications.
Two I/O application modules can be connected in the same ULP network.

Network
▶ A-30
Set of communicating devices that are interconnected by communication lines in order to share data and resources.

Open protocol
▶ A-30
A protocol for system communication, interconnection or data exchange for which technical specifications are public, i.e. there are no restrictions on access or implementation. An open protocol is the opposite of a proprietary protocol.

Protocol
▶ A-30
Standardised specification for dialog between digital components that exchange data. It is an operating mode based on the length and structure of binary words and it must be used by all the components exchanging data between themselves. Communication is not possible without using a protocol.

RJ45 connector
▶ A-14
Universal, 8-wire connector that is widely used in digital communication networks. The RJ45 connector is used to interconnect computer equipment (Ethernet, Modbus, etc.), telephones and audiovisual equipment.

RS485 Modbus
Modbus is the most widely used communication protocol in industrial networks. It operates in master-slave mode. An RS485 multipoint link connects the master and slaves via a pair of wires offering throughputs of up to 38400 bits/second over distances up to 1200 m). The master cyclically polls the slaves which send back the requested information.
The Modbus protocol uses frames containing the address of the targeted slave, the function (read, write), the datum and the CRC (cyclical redundancy check).

SDTAM
▶ A-95
Relay module with two static outputs specifically for the motor-protection Micrologic trip units 1 M, 2 M and 6 E-M. An output, linked to the contactor controller, opens the contactor when an overload or other motor fault occurs, thus avoiding opening of the circuit breaker. The other output stores the opening event in memory.

SDx
▶ A-95
Relay module with two outputs that remotes the trip or alarm conditions of Compact NSX circuit breakers equipped with a Micrologic electronic trip unit.

Static output
▶ A-95
Output of a relay made up of a thyristor or triac electronic component. The low switching capability means that a power relay is required.
This is the case for the SDx and SDTAM outputs.

ULP (Universal Logic Plug)
▶ A-32
Connection system used by Compact NSX to communicate information to the Modbus interface via a simple RJ45 cable. Compatible modules are indicated by the symbol opposite.



Glossary

Components

ASIC (Application Specific Integrated Circuit) ▶ A-10

Integrated circuit designed, built and intended for a specific application. It carries out repetitive sequences of instructions engraved in the silicon chip. For that reason, it is extremely reliable because it cannot be modified and is not affected by environment conditions.
Micrologic trip units use an ASIC for the protection functions. The ASIC cyclically polls the network status at a high frequency, using the values supplied by captors. Comparison with the settings forms the basis for orders to the electronic trip units.

Microprocessor ▶ A-10

A microprocessor is a more general purpose device than an ASIC. In Micrologic, a microprocessor is used for measurements and it can be programmed. It is not used for the main protection functions that are carried out by the ASIC.

Controls

Communicating motor mechanism ▶ A-96

For Compact NSX remote control via the communication system, a communicating motor mechanism is required. Except for the communication function, it is identical to the standard motor mechanism module and connects to and controlled by the BSCM module.

CNOMO machine-tool rotary handle ▶ A-98

Handle used for machine-tool control enclosures and providing IP54 and IK08.

Direct rotary handle ▶ A-98

This is an optional control handle for the circuit breaker. It has the same three positions I (ON), O (OFF) and TRIPPED as the toggle control. It provides IP40, IK07 and the possibility, due to its extended travel, of using early-make and early-break contacts. It maintains suitability for isolation and offers optional locking using a keylock or a padlock.

Emergency off ▶ A-97

In a circuit equipped with a circuit breaker, this function is carried out by an opening mechanism using an MN undervoltage release or an MX shunt release in conjunction with an emergency off button.

Extended rotary handle ▶ A-98

Rotary handle with an extended shaft to control devices installed at the rear of switchboards. It has the same characteristics as direct rotary handles. It offers multiple locking possibilities using a keylock, a padlock or a door interlock.

Failsafe remote tripping ▶ A-97

Remote tripping is carried out by an opening mechanism using an MN undervoltage release in conjunction with an emergency off button. If power is lost, the protection device opens the circuit breaker.

Manual toggle control ▶ A-103

This is the standard control mechanism for the circuit breaker, with a toggle that can be flipped up or down. In a moulded-case circuit breaker (MCCB), there are three positions, I (ON), O (OFF) and TRIPPED. Once in the TRIPPED position, manual reset is required by switching to O (OFF position before reclosing.The TRIPPED position does not offer isolation with positive contact indication. This is guaranteed only by the O (OFF) position.

MCC rotary handle ▶ A-98

Handle used for motor control centres and providing IP43 and IK07.

Motor mechanism module ▶ A-96

The optional motor mechanism module is used to remotely open, close and recharge the circuit breaker.

Discrimination / Cascading

Cascading

Cascading implements the current-limiting capacity of a circuit breaker, making it possible to install downstream circuit breakers with lower performance levels.
The upstream circuit breaker reduces any high short-circuit currents. This makes it possible to install downstream circuit breakers with breaking capacities less than the prospective short-circuit current at their point of installation.
The main advantage of cascading is to reduce the overall cost of switchgear.
Because the current is limited throughout the circuit downstream of the limiting circuit breaker, cascading applies to all the devices located downstream.

Current discrimination

Discrimination based on the difference between the current-protection settings of the circuit breakers. The difference in settings between two successive circuit breakers in a circuit must be sufficient to allow the downstream breaker to clear the fault before the upstream breaker trips.

www.electroshaili.com | Electro Shaili الکتروشایلی
استعلام‌آنی (۱۰ خط) ۰۲۱-۹۲۰۰۶۶۱۷

Discrimination ▶ A-10

Discrimination is ensured between upstream and downstream circuit breakers if, when a fault occurs, only the circuit breaker placed immediately upstream of the fault trips.
Discrimination is the key to ensuring the continuity of service of an installation.

Energy discrimination ▶ A-10

This function is specific to Compact NSX (see Reflex tripping on page G-7) and supplements the other types of discrimination.

Partial discrimination ▶ A-10

Discrimination is partial if the conditions for total discrimination are not met up to the ultimate short-circuit current Icu, but only up to a lesser value. This value is called the discrimination limit. If a fault exceeds the discrimination limit, both circuit breakers trip.

Time discrimination

Discrimination based on the difference between the time-delay settings of the circuit breakers. The upstream trip unit is delayed to provide the downstream breaker the time required to clear the fault.

Total discrimination ▶ A-10

Total discrimination is ensured between upstream and downstream circuit breakers if, for all fault values, from overloads up to solid short-circuits, only the downstream circuit breaker trips and the upstream circuit breaker remains closed.

Zone selective interlocking (ZSI) ▶ A-20

A number of circuit breakers with Micrologic electronic trip units are interconnected one after another by a pilot wire. In the event of a short-time or ground fault:
■ in the absence of information from downstream, the circuit breaker directly concerned by the fault (i.e. located just upstream of the fault) shifts to the shortest time delay and sends a signal upstream
■ the upstream device, on receiving the signal from the downstream device, maintains its normal time delay.
In this manner, the fault is cleared rapidly by the circuit breaker closest to the fault.

Environment

EMC (Electromagnetic compatibility) ▶ A-3

EMC is the capacity of a device not to disturb its environment during operation (emitted electromagnetic disturbances) and to operate in a disturbed environment (electromagnetic disturbances affecting the device). The standards define various classes for the types of disturbances. Micrologic trip units comply with annexes F and J in standard IEC IE60947-2.

Power loss ▶ B-10
Pole resistance

The flow of current through the circuit-breaker poles produces Joule-effect losses caused by the resistance of the poles.

Product environmental profile (PEP) ▶ A-2
LCA: Life-cycle assessment
ISO 14040

An assessment on the impact of the construction and use of a product on the environment, in compliance with standard ISO 14040, Environmental management, life-cycle assessment (LCA), principles and framework.
For Compact NSX, this assessment is carried out using the standardised EIME (Environmental Impact and Management Explorer) software, which makes possible comparisons between the products of different manufacturers.
It includes all stages, i.e. manufacture, distribution, use and end of life, with set usage assumptions:
■ use over 20 years at a percent load of 80% for 14 hours per day and 20% for ten hours
■ according to the European electrical-energy model.
It provides the information presented below.
■ Materials making up the product: composition and proportions, with a check to make sure no substances forbidden by the RoHS directive are included.
■ Manufacture: on Schneider Electric production sites that have set up an environmental management system certified ISO 14001.
■ Distribution: packaging in compliance with the 94/62/EC packaging directive (optimised volumes and weights) and optimised distribution flows via local centres.
■ Use: no aspects requiring special precautions for use. Power lost through Joule effect in Watts (W) must be < 0.02% of total power flowing through the circuit breaker. Based on the above assumptions, annual consumption from 95 to 200 kWh.
■ End of life: products dismantled or crushed. For Compact NSX, 81% of materials can be recycled using standard recycling techniques. Less than 2% of total weight requires special recycling.

www.electroshaili.com | Electro Shaili الکتروشایلی
استعلام‌آنی (۱۰ خط) ۰۲۱-۹۲۰۰۶۶۱۷

Glossary

Product environmental profile (PEP) ▶ A-2
Environmental indicators

Environmental indicators are also frequently used for the PEP (sheet available on request for Compact NSX):
- Depletion of natural resources
- Depletion of energy
- Depletion of water
- Potential for atmospheric warming (greenhouse effect)
- Potential for stratospheric ozone depletion
- Creation of atmospheric ozone (ozone layer)
- Acidification of air (acid rain)
- Production of hazardous waste.

RoHS directive ▶ A-2
(Restriction of Hazardous substances)

European directive 2002/95/EC dated 27 January 2003 aimed at reducing or eliminating the use of hazardous substances. The manufacturer must attest to compliance, without third-party certification. Circuit breakers are not included in the list of concerned products, which are essentially consumer products.
That not withstanding, Schneider Electric decided to comply with the RoHS directive. Compact NSX products are designed in compliance with RoHS and do not contain (above the authorised levels) lead, mercury, cadmium, hexavalent chromium or flame retardants (polybrominated biphenyls PBB and polybrominated diphenyl ether PBDE).

Safety clearances ▶ A-2

When installing a circuit breaker, minimum distances (safety clearances) must be maintained between the device and panels, bars and other protection systems installed nearby. These distances, which depend on the ultimate breaking capacity, are defined by tests carried out in accordance with standard IEC 60947-2.

Temperature derating ▶ B-8

An ambient temperature varying significantly from 40°C can modify operation of magnetic or thermal-magnetic protection functions. It does not affect electronic trip units. However, when electronic trip units are used in high-temperature situations, it is necessary to check the settings to ensure that only the permissible current for the given ambient temperature is let through.

Vibration withstand ▶ B-2
IEC 60068-2-6

Circuit breakers are tested in compliance with standard IEC 60068-2-6 for the levels required by merchant-marine inspection organisations (Veritas, Lloyd's, etc.):
- 2 to 13.2 Hz: amplitude of ±1 mm
- 13.2 to 100 Hz: constant acceleration of 0.7 g.

WEEE directive ▶ A-2
(Waste of Electrical and Electronic Equipment)

European directive on managing the waste of electrical and electronic equipment. Circuit breakers are not included in the list of concerned products.
However, Compact NSX products respect the WEEE directive.

Harmonics

Current harmonics ▶ A-22

Non-linear loads cause harmonic currents that flow in the 50 Hz (or 60 Hz) distribution system. Total harmonic current is the sum of sinusoidal AC currents for which the rms values can be measured and broken down into:
- the fundamental current at the 50/60 Hz frequency of the distribution system, with an rms value of IH_1
- harmonic currents with whole, odd multiples (3, 5, 7, etc.) of the 50/60 Hz frequency, called the third-order, fifth-order, etc. harmonics. For example, IH_3, the third-order harmonic at 150/180 Hz, IH_5, the fifth-order harmonic at 250/300 Hz, etc.

The presence of harmonics in the system must be monitored and limited because it results in temperature rise, currents in the neutral (caused by the third-order harmonics and multiples), malfunctions of sensitive electronic devices, etc.
Micrologic E trip units take into account harmonics up to order 15 in the THDI and THDU calculations.

Non-linear load

Systems producing harmonics are present in all industrial, commercial and residential sectors. Harmonics are caused by non-linear loads. A load is said to be non-linear when the current drawn does not have the same waveform as the supply voltage. Typically, loads using power electronics are non-linear.
Examples of non-linear loads include computers, rectifiers, variable-speed drives, arc furnaces and fluorescent lighting.

Total harmonic distortion of current (THDI) ▶ A-23

THDI characterises the distortion of the current wave by harmonics.
It indicates the quantity of harmonics in the resulting waveform. It is expressed in percent.
The higher the THDI, the more the current is distorted by harmonics.
THDI should remain below 10%. Above that level, there is said to be harmonic pollution that is considered severe when it rises above 50%.

Total harmonic distortion of voltage (THDU) ▶ A-23

THDU characterises the distortion of the voltage wave by harmonics.
It indicates the quantity of harmonics in the resulting waveform. It is expressed in percent.
The higher the THDU, the more the system voltage is distorted by harmonics. It is advised not to exceed 5% for low-voltage systems.

Voltage harmonics ▶ A-22

For each current harmonic IHk, there is a voltage harmonic UHk of the same order k, where the resulting voltage is the sum of the two waves.
The voltage wave is therefore distorted with respect to the standard sinusoidal wave.

Measurements

Contact wear ▶ A-25

Each time Compact NSX opens, the Micrologic 5 / 6 trip unit measures the interrupted current and increments the contact-wear indicator as a function of the interrupted current, according to test results stored in memory.

Current transformer with iron-core toroid ▶ A-44

It is made up of a coil wound around an iron frame through which a power busbar runs. The current flowing in the bar, on passing through the sensor, induces a magnetic field that reverses for each half period. This variation in the field in turn creates an induced current in the coil. This current is proportional to the current flowing in the bar. It is sufficient to supply the measurement electronics.
The disadvantage of iron-core measurement current transformers (CT) is that they rapidly saturate for currents > 10 In.

Current transformer with Rogowski toroid or air-core CT

It is made up of a coil without an iron frame, through which a power busbar runs. The output voltage at the coil terminals is proportional to the current flowing through the bar. The result is a current transformer (CT) with a voltage output. The advantage is that it never saturates whatever the primary current and thus enables measurement of high currents. The output is however a very low current that is too low to supply the measurement electronics.
For Micrologic, Rogowski CTs measure the current and a second CT, with an iron core, provides the electrical supply.

Demand current, demand power and peak values ▶ A-23

Average of the instantaneous current or power values over an adjustable fixed or sliding time interval. The highest value observed over the time interval is the peak value. The time interval runs from the last reset.

Instantaneous current ▶ A-23

True rms value of the current measured by the current transformers over a sliding time interval. Available on Micrologic 5/6 A or E.

Instantaneous voltage ▶ A-23

True rms value of the voltage measured by the voltage sensors over a sliding time interval. Available on Micrologic 5/6 A or E.

Maximeters/minimeters ▶ A-22

Micrologic 5 and 6 A or E can record the minimum and maximum values of electrical parameters over set time periods.

Overvoltage category ▶ A-44
(OVC - Overvoltage category)
IEC 60947-1. Annex H

Standard IEC 60664-1 stipulates that it is up to the user to select a measurement device with a sufficient overvoltage category, depending on the network voltage and the transient overvoltages likely to occur.
Four overvoltage categories define the field of use for a device.
- Cat. I. Devices supplied by a SELV isolating transformer or a battery.
- Cat. II. Residential distribution, handheld or laboratory tools and devices connected to standardised 2P + earth electrical outlets (230 V).
- Cat. III. Industrial distribution, fixed distribution circuits in buildings (main low voltage switchboards, rising mains, elevators, etc.).
- Cat. IV. Utility substations, overhead lines, certain industrial equipment.

Percent load ▶ A-25

Percentage of current flowing through the circuit breaker with respect to its rated current. Micrologic 6 E-M offers this information and can sum it over the total operating time to provide the load profile for the following ranges, 0 to 49%, 50 to 79%, 80 to 89% and ≥ 90%.

Phase sequence ▶ A-25

The order in which the phases are connected (L1, L2, L3 or L1, L3, L2) determines the direction of rotation for three-phase asynchronous motors. Micrologic 6 E-M trip units provide this information.

Power and energy metering (consumption) ▶ A-23

The digital electronics in Micrologic 5/6 E calculate the instantaneous power levels, apparent (S in kVA), active (P in kW) and (Q in kV), and integrate over a time interval to determine the corresponding energies (kVAh, kWh kvarh). Calculations are for each phase and for the total.

Glossary

Time-stamped histories ▶ A-25
Micrologic trip units store information on events (e.g. alarms and their cause) that are time-stamped to within a millisecond.

Protection

Ground-fault protection G (Ig) ▶ A-21
Protection function specific to electronic circuit breakers, symbolised by G (Ground). This protection can calculate high-threshold residual earth-leakage currents (in the order of tens of Amperes) on the basis of phase-current measurements. Micrologic 5/6 offers this protection function with adjustable pick-up Ig and time delay.

Instantaneous protection I (Ii) ▶ A-21
This protection supplements Isd. It provokes instantaneous opening of the device. The pick-up may be adjustable or fixed (built-in). This value is always lower than the contact-repulsion level.

Long-time protection L (Ir) ▶ A-21
Protection function where the adjustable Ir pick-up determines a protection curve similar to the thermal-protection curve (inverse-time curve I^2t). The curve is generally determined on the basis of the Ir setting which corresponds to a theoretically infinite tripping time (asymptote) and of the point at 6 Ir at which the tripping time depends on the rating.

Magnetic protection (Im) ▶ A-16
Short-circuit protection provided by magnetic trip units (see this term). The pick-up setting may be fixed or adjustable.

Neutral protection (IN) ▶ A-18
The neutral is protected because all circuit-breaker poles are interrupted. The setting may be that used for the phases or specific to the neutral, i.e. reduced neutral (0.5 times the phase current) or OSN (oversized neutral) at 1.6 times the phase current. For OSN protection, the maximum device setting is limited to 0.63 In.

Residual-current earth-leakage protection (IΔn) ▶ A-46
Protection provided by Vigi modules, in which the residual-current toroids directly detect low-threshold earth-leakage currents (in the order of tens of mA) caused by insulation faults.

Short-delay protection S (Isd) ▶ A-21
Protection function specific to electronic circuit breakers, symbolised by S (Short delay or short time). This protection supplements thermal protection. The reaction time is very short, but has a slight time delay to enable discrimination with the upstream device. The short-delay pick-up Isd is adjustable from approximately 1.5 to 10 Ir.

Short-delay protection with fixed time delay So (Isd) ▶ A-19
Short-delay protection, but with a fixed time delay. This function is available on Micrologic 2. It is symbolised by So. It ensures discrimination with downstream devices.

Thermal protection (Ir) ▶ A-17
Overload protection provided by thermal trip units (see this term) using an inverse-time curve (I^2t).

Relays and auxiliary contacts

Auxiliary contact
IEC 60947-1
"Contact included in an auxiliary circuit and mechanically operated by the switching device".

Break contact ▶ A-98
IEC 60947-1
"Control or auxiliary contact which is open when the main contacts of the mechanical switching device are closed and closed when they are open".

Make contact ▶ A-98
IEC 60947-1
"Control or auxiliary contact which is closed when the main contacts of the mechanical switching device are closed and open when they are open".

Relay (electrical) ▶ A-20
IEC 60947-1
"Device designed to produce sudden, predetermined changes in one or more electrical output circuits when certain conditions are fulfilled in the electrical input circuits controlling the device".

Relay module with static output ▶ A-95
Output of a relay made up of a thyristor or triac electronic component. The low interrupting capacity means that a power relay is required. This is the case for the SDx and SDTAM outputs.

Switchgear

Circuit breaker ▶ A-6
IEC 60947-2



"Mechanical switching device, capable of making, carrying and breaking currents under normal circuit conditions and also making, carrying for a specified time and breaking currents under specified abnormal circuit conditions such as those of short circuit". Circuit breakers are the device of choice for protection against overloads and short-circuits. Circuit breakers may, as is the case for Compact NSX, be suitable for isolation.

Circuit-breaker utilisation category ▶ A-6
IEC 60947-2

The standard defines two utilisation categories, A and B, depending on breaker discrimination with upstream breakers under short-circuit conditions.
■ Category A. Circuit breakers not specifically designed for discrimination applications.
■ Category B. Circuit breakers specifically designed for discrimination, which requires a short time-delay (which may be adjustable) and a rated short-time withstand current in compliance with the standard.
Compact NSX100 to 630 circuit breakers are category A, however, by design, they provide discrimination with downstream devices (see the Complementary technical information guide).

Contactor ▶ A-48
IEC 60947-1



"Mechanical switching device having only one position of rest, operated otherwise than by hand, capable of making, carrying and breaking currents under normal circuit conditions including operating overload conditions". A contactor is provided for frequent opening and closing of circuits under load or slight overload conditions. It must be combined and coordinated with a protective device against overloads and short-circuits, such as a circuit breaker.

Contactor utilisation categories ▶ A-49
IEC 60947-4-1

The standard defines four utilisation categories, AC1, AC2, AC3 and AC4 depending on the load and the control functions provided by the contactor. The class depends on the current, voltage and power factor, as well as contactor withstand capacity in terms of frequency of operation and endurance.

Current-limiting circuit breaker ▶ A-48
IEC 60947-2

"A circuit-breaker with a break-time short enough to prevent the short-circuit current reaching its otherwise attainable peak value".

Disconnector
IEC 60947-3

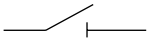

"Mechanical switching device which, in the open position, complies with the requirements specified for the isolating function". A disconnector serves to isolate upstream and downstream circuits. It is used to open or close circuits under no-load conditions or with a negligible current level. It can carry the rated circuit current and, for a specified time, the short-circuit current.

Switch-disconnector ▶ A-70
IEC 60947-3

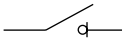

"Switch which, in the open position, satisfies the isolating requirements specified for a disconnector". A switch-disconnector serves for switching and isolation. The switch function breaks the circuit under load conditions and the disconnection function isolates the circuit. Protection is not provided. It may be capable of making short-circuit currents if it has the necessary making capacity, but it cannot break short-circuit currents. Compact NSX100 to 630 NA switch-disconnectors have a making capacity.

Switch-disconnector utilisation category ▶ A-71
IEC 60947-3

The standard defines six utilisation categories, AC-21A or B, AC-22 A or B, AC23 A or B. They depend on the rated operational current and the mechanical durability (A for frequent operation or B for infrequent operation). Compact NSX NA switch-disconnectors comply with utilisation categories AC22A or AC23A.

Three-phase asynchronous motors and their protection

Locked-rotor protection (Ijam) ▶ A-56

This function steps in when the motor shaft cannot or can no longer drive the load. The result is a high overcurrent.

Long-start protection (Ilong) ▶ A-56

An overly long start means the current drawn remains too high or too low for too long, with respect to the starting current. In all cases, the load cannot be driven and the start must be interrupted. The resulting temperature rise must be taken into account before restarting.

Phase-unbalance or phase- loss protection (Iunbal) ▶ A-55

This protection function steps in if the current values and/or the unbalance in the three phases supplying the motor exceeds tolerances. Currents should be equal and displacement should be one third of a period. Phase loss is a special case of phase unbalance.

Glossary

Starting current ▶ A-50
Start-up of a three-phase, asynchronous motor is characterised by:
- a high inrush current, approximately 14 In for 10 to 15 ms
- a starting current, approximately 7.2 In for 5 to 30 seconds
- return to the rated current after the starting time.

Starting time ▶ A-50
Time after which the motor ceases to draw the starting current and falls back to the operating current Ir (≤ In).

Thermal image of the rotor and stator ▶ A-56
The thermal image models the thermal behaviour of a motor rotor and stator, taking into account temperature rise caused by overloads or successive starts, and the cooling constants. For each motor power rating, the algorithm takes into account a theoretical amount of iron and copper which modifies the cooling constants.

Thermal protection
Protection against overcurrents following an inverse time curve I^2t = constant, which defines the maximum permissible temperature rise for the motor.
Tripping occurs after a time delay that decreases with increasing current.

Trip class
IEC 60947-4-1 ▶ A-50
The trip class determines the trip curve of the thermal protection device for a motor feeder. The standard defines trip classes 5, 10, 20 and 30. These classes are the maximum durations, in seconds, for motor starting with a starting current of 7.2 Ir, where Ir is the thermal setting indicated on the motor rating plate.

Under-load protection (Iund) ▶ A-56
This function steps in when the driven load is too low. It detects a set minimum phase current which signals incorrect operation of the driven machine. In the example of a pump, under-load protection detects when the pump is no longer primed.

Trip units

Electronic trip unit (Micrologic) ▶ A-18
Trip unit that continuously measures the current flowing through each phase and the neutral if it exists. For Micrologic, the measurements are provided by built-in current sensors linked to an analogue-digital converter with a high sampling frequency.
The measurement values are continuously compared by the ASIC to the protection settings. If a setting is overrun, a Mitop release trips the circuit-breaker operating mechanism.
This type of trip unit offers much better pick-up and delay setting accuracy than thermal-magnetic trip units. It also provides a wider range of protection functions.

Magnetic release ▶ A-16
Release actuated by a coil or a lever. A major increase in the current (e.g. a short-circuit) produces in the coil or the lever a change in the magnetic field that moves a core. This trips the circuit breaker operating mechanism. Action is instantaneous. The pick-up setting may be adjustable.

Reflex tripping ▶ A-6
Compact NSX circuit breakers have a patented reflex-tripping system based on the energy of the arc and that is independent of the other protection functions.
It operates extremely fast, before the other protection functions. It is an additional safety function that operates before the others in the event of a very high short-circuit.

Release
IEC 60947-1
Device, mechanically connected to a mechanical switching device (e.g. a circuit breaker), which releases the holding means and permits the opening or the closing of the switching device. For circuit breakers, releases are often integrated in a trip unit.

Shunt release (MX) ▶ A-67
This type of release operates when supplied with current. The MX release provokes circuit-breaker opening when it receives a pulse-type or maintained command.

Thermal-magnetic trip unit ▶ A-16
Trip unit combining thermal protection for overloads and magnetic protection.

Thermal release ▶ A-16
Release in which a bimetal strip is heated by the Joule effect. Above a temperature-rise threshold that is a function of the current and its duration (I^2t curve = constant, which is representative of temperature rise in cables), the bimetal strip bends and releases the circuit-breaker opening mechanism. The pick-up setting may be adjustable.

Undervoltage release (MN) ▶ A-97
This type of release operates when the supply voltage drops below the set minimum.

Notes

Notes

UK contact details -

Ireland contact details -

As the global specialist in energy management with operations in more than 100 countries, Schneider Electric offers integrated solutions across multiple market segments, including leadership positions in energy and infrastructure, industrial processes, building automation, and data centres/ networks, as well as a broad presence in residential applications.

Schneider Electric is dedicated to making individuals' and organisations' energy safe, reliable, efficient, productive and green from Power Plant to Plug™.

We are changing our brand names and becoming one Schneider Electric.
You'll get the same great quality products, but from one name you can remember and trust. This provides you and your customers with the reassurance associated with Schneider Electric.

Some of our market leading brands have already become Schneider Electric including **Merlin Gerin, Telemecanique, Square D, GET, Mita, Sarel, Himel, Thorsman, Tower** and **TAC**.

Working as one Schneider Electric makes it clearer that our ranges are highly compatible for integrated solutions.

Schneider Electric Ltd

United Kingdom
Stafford Park 5,
Telford
Shropshire
TF3 3BL
Tel: 0870 608 8 608
Fax: 0870 608 8 606
www.schneider-electric.com/uk

Ireland
Head office,
Block a
Maynooth Business Campus
Maynooth, Co. Kildare
Tel: (01) 601 2200
Fax: (01) 601 2201
www.schneider-electric.com/ie

Schneider Electric Limited is a company registered in England and Wales.
Registered number: 1407228. Registered office: Stafford Park 5, Telford, Shropshire TF3 3BL.

© 2013 Schneider Electric. All Rights Reserved. Schneider Electric, Active Energy Management, Compact, EcoStruxure, ION Enterprise, iRIO, Make the most of your energy, Masterpact, Micrologic, Power Plant To Plug, Modbus, and PowerLogic are owned by Schneider Electric Industries SAS, or its affiliated companies in the United States and other countries.

As standards, specifications and designs change from time to time, please ask for confirmation of the information given in this publication.

SE8748 JAN 2015

member of

www.electroshaili.com | Electro Shaili الکتروشایلی

Schneider Electric

۰۲۱-۹۲۰۰۶۶۱۷ (۱۰ خط) استعلام آنی