www.electroshaili.com Electro Shaili الکتروشایلی

Operation Manual

Goodrive Series
Inverter in Parallel Connection



SHENZHEN INVT ELECTRIC CO., LTD.

www.electroshaili.ir ۰۲۱-۶۶۳۴۴۷۱۴ ۰۹۱۲-۶۳۹۸۹۶۱ ۰۹۱۰-۷۲۴۹۰۷۴ ۰۲۱-۶۶۱۷۰۰۶۲-۵ ۰۲۱-۹۲۰۰۶۶۱۷ (ده خط)

Preface

Based on Goodrive series general products, the project of large power parallel connection which extends the power range to 3000kW can meet the demand of the market.

This manual applies to Goodrive series inverters.

If the product is ultimately used for military affairs or manufacture of weapon, it will be listed on the export control formulated by ***Foreign Trade Law of the People's Republic of China***. Rigorous review and necessary export formalities are needed when exported.

Our company reserves the right to update the information of our products.

Content

Preface 1
Content 2
Chapter 1 Product overview 3
1.1 Product model 3
1.2 Rated specifications 3
Chapter 2 Product dimension 5
2.1 Installation dimension of single inverter 5
2.2 Installation dimension of inverters in parallel connection (recommended) 7
2.3 Installation dimension of inverters in parallel connection (installed closely) 8
Chapter 3 Wiring diagram 11
3.1 Wiring diagram of main circuit 11
3.2 Wiring diagram of control circuit 11
Appendix D Peripheral options and parts 13
D.1 Cables 13
D.2 Breaker and electromagnetic contactor 16
D.3 Reactor 18
D.4 Filter 19
D.5 Braking system 21

Chapter 1 Product overview

Goodrive series inverters in parallel connection only for power extension are completely the same as the corresponding series inverters in function and performance.

1.1 Product model

Power (kW)	380V inverters in parallel connection		660V inverters in parallel connection	
	Power (kW)	Qty.	Power (kW)	Qty.
560	280	2	-	-
630	315	2	-	-
710	350	2	350	2
800	400	2	400	2
1000	500	2	500	2
1200	400	3	630	2
1500	500	3	500	3
2000	500	4	500	4
2500	500	5	630	4
3000	500	6	630	5

1.2 Rated specifications

1.2.1 The inverters of AC 3PH 380V(-15%)~440V(+10%)

Rated output power (kW)	Rated input current (A)	Rated output current (A)
560	1090	1060
630	1220	1200
710	1250	1300
800	1430	1440
1000	1780	1720
1200	2145	2160
1500	2670	2580
2000	3560	3440
2500	4450	4300
3000	5340	5160

1.2.2 The inverters of AC 3PH 520V(-15%)~690V(+10%)

Rated output power (kW)	Rated input current (A)	Rated output current (A)
710	720	760
800	822	860
1000	1036	1080
1200	1310	1360
1500	1554	1620
2000	2072	2160
2500	2620	2720
3000	3275	3400

Chapter 2 Product dimension

2.1 Installation dimension of single inverter

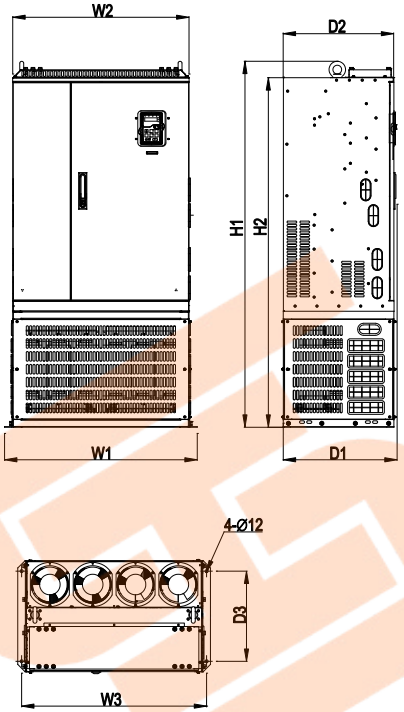

Installation of 380V 280-315kW single inverter

Installation of 660V 350kW single inverter

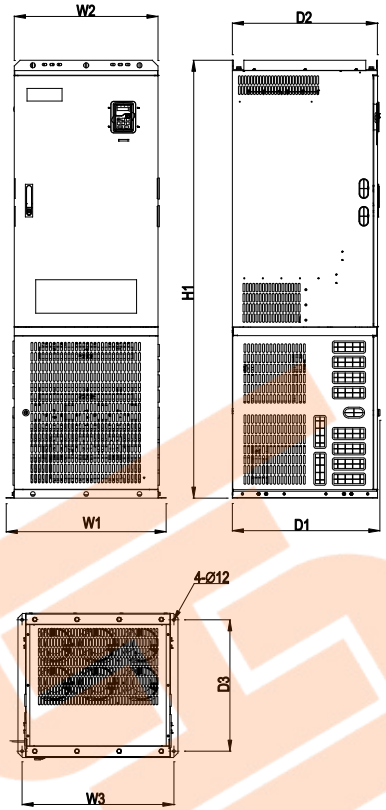

Installation of 380V 350-500kW single inverter

Installation of 660V 400-630kW single inverter

Power	380V single inverter (unit: mm)								
(kW)	W1	W2	W3	H1	H2	D1	D2	D3	Installation hole
280~315	749	685	719	1419.9	1356	442.5	429.5	350	12
350~500	690	620	655	1900	-	636.3	625.5	570	12

Power	660V single inverter (unit: mm)								
(kW)	W1	W2	W3	H1	H2	D1	D2	D3	Installation hole
350	749	685	719	1419.9	1356	442.5	429.5	350	12
400~630	690	620	655	1900	-	636.3	625.5	570	12

2.2 Installation dimension of inverters in parallel connection (recommended)

Note: The recommended method of installing the inverters in parallel is convenient for inlet air in the products, the heat dissipation is good but the installation dimension is large.

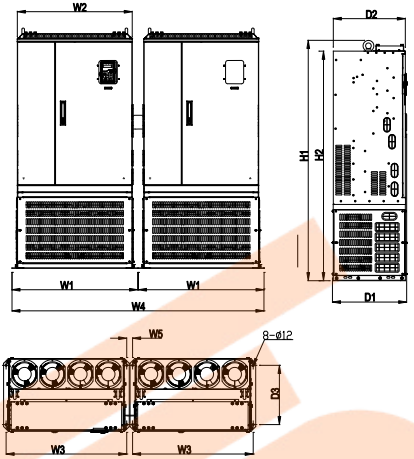

Installation of 380V 560-630kW inverters in parallel connection

Installation of 660V 710kW inverters in parallel connection

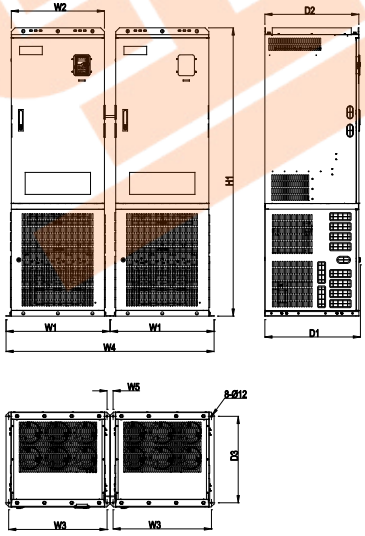

Installation of 380V 710-3000kW inverters in parallel connection

Installation of 660V 800-3000kW inverters in parallel connection

Power (kW)	380V inverters in parallel connection (recommended) (unit: mm)										
	W1	W2	W3	W4	W5	H1	H2	D1	D2	D3	Installation hole
560~630kW	749	685	719	1503	35	1419.9	1356	442.5	429.5	350	12
710~1000kW	690	620	655	1385	40	1900	-	636.3	625.5	570	12
1200~1500kW	690	620	655	2080	40	1900	-	636.3	625.5	570	12
2000kW	690	620	655	2775	40	1900	-	636.3	625.5	570	12
2500	690	620	655	3470	40	1900	-	636.3	625.5	570	12
3000kW	690	620	655	4165	40	1900	-	636.3	625.5	570	12

Power (kW)	660V inverters in parallel connection (recommended) (unit: mm)										
	W1	W2	W3	W4	W5	H1	H2	D1	D2	D3	Installation hole
710kW	749	685	719	1503	35	1419.9	1356	442.5	429.5	350	12
800~1200kW	690	620	655	1385	40	1900	-	636.3	625.5	570	12
1500kW	690	620	655	2080	40	1900	-	636.3	625.5	570	12
2000~2500kW	690	620	655	2775	40	1900	-	636.3	625.5	570	12
3000kW	690	620	655	3470	40	1900	-	636.3	625.5	570	12

2.3 Installation dimension of inverters in parallel connection (installed closely)

Note: The dimension of installing the inverters closely in parallel is small, which will affect inlet air in the products but meet the need of heat dissipation.

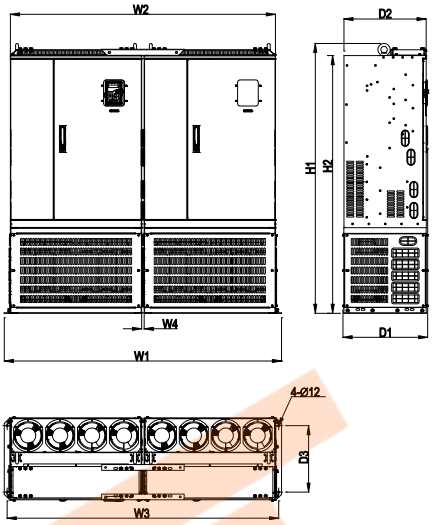

Installation of 380V 560-630kW inverters in parallel connection

Installation of 660V 710kW inverters in parallel connection

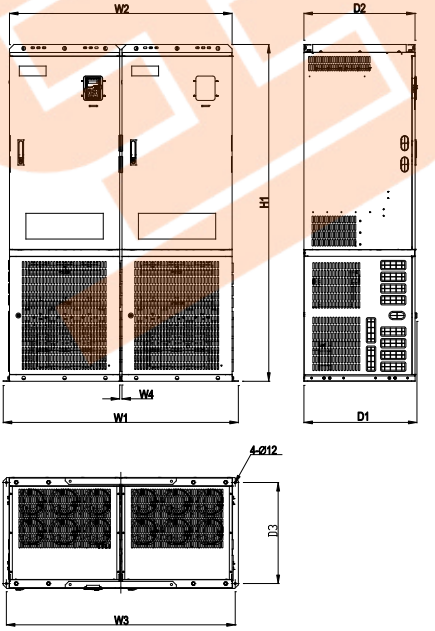

Installation of 380V 710-3000kW inverters in parallel connection

Installation of 660V 800-3000kW inverters in parallel connection

Power (kW)	380V inverters in parallel connection (installed closely) (unit: mm)									
	W1	W2	W3	W4	H1	H2	D1	D2	D3	Installation hole
560~630kW	1447	1383	1417	13	1419.9	1356	442.5	429.5	350	12
710~1000kW	1323	1253	1288	13	1900	-	636.3	625.5	570	12
1200~1500kW	1956	1886	1921	13	1900	-	636.3	625.5	570	12
2000kW	2589	2519	2554	13	1900	-	636.3	625.5	570	12
2500kW	3222	3152	3187	13	1900	-	636.3	625.5	570	12
3000kW	3855	3785	3820	13	1900	-	636.3	625.5	570	12

Power (kW)	660V inverters in parallel connection (installed closely) (unit: mm)									
	W1	W2	W3	W4	H1	H2	D1	D2	D3	Installation hole
710kW	1447	1383	1417	13	1419.9	1356	442.5	429.5	350	12
800~1200kW	1323	1253	1288	13	1900	-	636.3	625.5	570	12
1500kW	1956	1886	1921	13	1900	-	636.3	625.5	570	12
2000~2500kW	2589	2519	2554	13	1900	-	636.3	625.5	570	12
3000kW	3222	3152	3187	13	1900	-	636.3	625.5	570	12

Chapter 3 Wiring diagram

3.1 Wiring diagram of main circuit

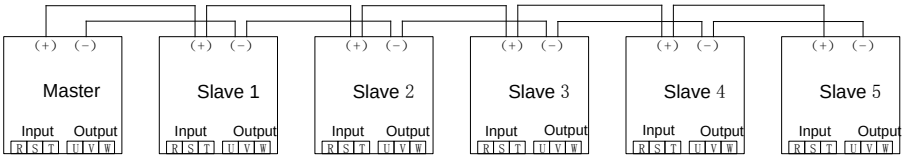

	Master	Master-Slave 1	Slave 1-Slave 2	Slave 2-Slave 3	Slave 3-Slave 4	Slave 4-Slave 5
(+) bus length	≈1700mm	≈1700mm	≈1700mm	≈1700mm	≈1700mm	≈1700mm
(-) bus length	≈1700mm	≈1700mm	≈1700mm	≈1700mm	≈1700mm	≈1700mm

Note: The number of inverters in parallel connection depends on the actual power, 6 at most. The length of the cables at input and output sides of the master and slaves should be the same.

3.2 Wiring diagram of control circuit

	Master	Master-Slave 1	Master-Slave 2	Master-Slave 3	Master-Slave 4	Master-Slave 5
Length of 15-core serial port cable	≈1000mm	≈2500mm	≈2500mm	≈3500mm	≈4500mm	≈5500mm
Length of optical fiber cable	≈1000mm	≈1500mm	≈2600mm	≈3700mm	≈4800mm	≈5900mm

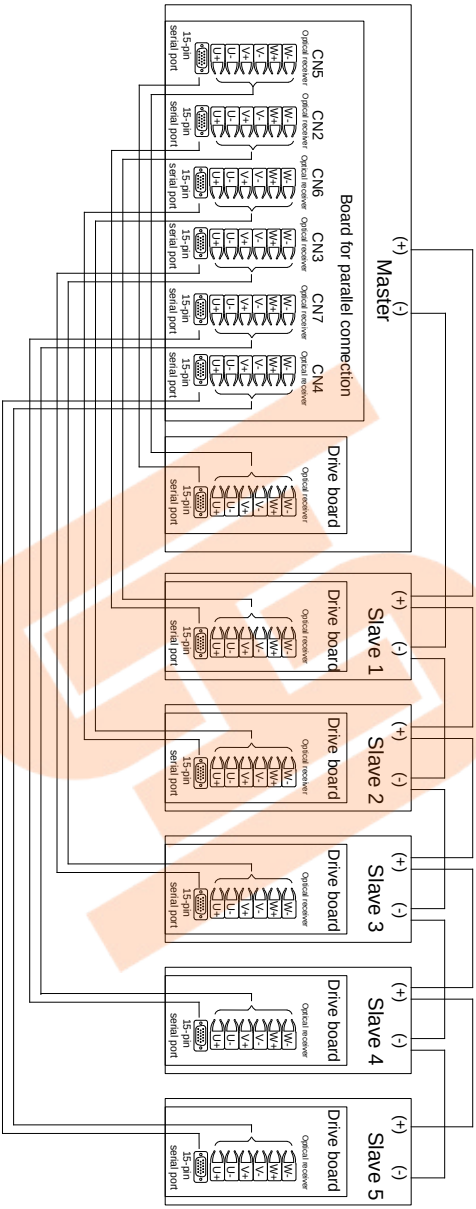
Board for parallel connection
CN5
CN2
CN6
CN3
CN7
CN4
Optical receiver
15-pin serial port
Drive board
Master
Slave 1
Slave 2
Slave 3
Slave 4
Slave 5
(+)
(-)

Appendix D Peripheral options and parts

D.1 Cables

D.1.1 Power cables

Dimension the input power and motor cables according to local regulations.

• The input power and the motor cables must be able to carry the corresponding load currents.

• The cable must be rated for at least 70℃ maximum permissible temperature of the conductor in continuous use.

• The conductivity of the PE conductor must be equal to that of the phase conductor (same cross-sectional area).

• Refer to chapter ***Technical Data*** for the EMC requirements.

A symmetrical shielded motor cable (see the figure below) must be used to meet the EMC requirements of the CE.

A four-conductor system is allowed for input cabling, but a shielded symmetrical cable is recommended. Compared to a four-conductor system, the use of a symmetrical shielded cable reduces electromagnetic emission of the whole drive system as well as motor bearing currents and wear.

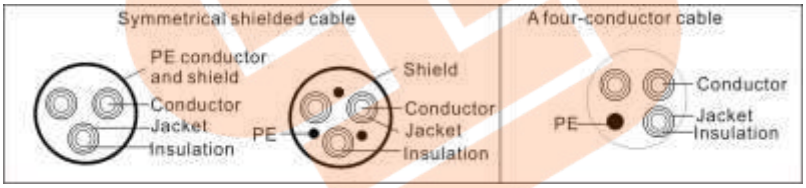

Note: A separate PE conductor is required if the conductivity of the cable shield is not sufficient for the purpose.

To function as a protective conductor, the shield must have the same cross-sectional area as the phase conductors when they are made of the same material for reducing grounding resistance and keeping impedance continuity better.

To effectively suppress radiated and conducted radio-frequency emissions, the shield conductivity must be at least 1/10 of the phase conductor conductivity. The requirements are easily met with a copper or aluminum shield. The minimum requirement of the motor cable shield of the drive is shown below. It consists of a concentric layer of copper wires. The better and tighter the shield, the lower the emission level and bearing currents.

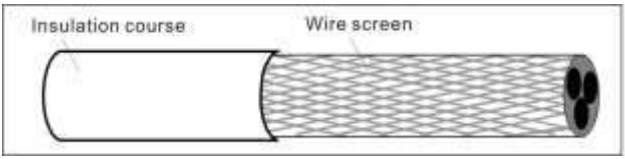

D.1.2 Control cables

All analog control cables and the cable used for the frequency input must be shielded. Use a double-shielded twisted pair cable (Figure a) for analog signals. Employ one individually shielded pair for each signal. Do not use common return for different analog signals.

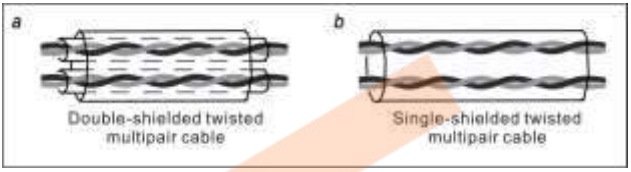

D.1.3 Power cable routing

A double-shielded cable is the best alternative for low-voltage digital signals, but a single-shielded or unshielded twisted multipair cable (Fig b) is also usable. However, for frequency input, always use a shielded cable.

The relay cable needs the cable type with braided metallic screen.

The keypad needs to connect with cables. It is recommended to use the screen cable on complex electrical magnetic condition.

Note: Run analog and digital signals in separate cables.

Do not make any voltage tolerance or insulation resistance tests (for example hi-pot or megger) on any part of the drive as testing can damage the drive. Every drive has been tested for insulation between the main circuit and the chassis at the factory. Also, there are voltage-limiting circuits inside the drive which cut down the testing voltage automatically.

Note: Check the insulation of the input power cable according to local regulations before connecting to the drive.

D.1.3.1 AC 3PH 380V(-15%)~440V(+10%)

Power (kW)	380V inverters in parallel connection		Recommended cable size of single inverter (mm²)		
	Power (kW)	Qty.	RST UVW	PE	(+)(-)
560	280	2	95*4P	95*2P	120*2P
630	315	2	95*4P	95*2P	150*2P

Power (kW)	380V inverters in parallel connection		Recommended cable size of single inverter (mm²)		
	Power (kW)	Qty.	RST UVW	PE	(+)(-)
710	350	2	95*4P	95*2P	150*2P
800	400	2	150*4P	150*2P	120*3P
1000	500	2	150*4P	150*2P	150*3P
1200	400	3	150*4P	150*2P	120*3P
1500	500	3	150*4P	150*2P	150*3P
2000	500	4	150*4P	150*2P	150*3P
2500	500	5	150*4P	150*2P	150*3P
3000	500	6	150*4P	150*2P	150*3P

D.1.3.2 AC 3PH 520V(-15%)~690V(+10%)

Power (kW)	660V inverters in parallel connection		Recommended cable size of single inverter (mm²)		
	Power (kW)	Qty.	RST UVW	PE	(+)(-)
710	350	2	95*2P	95	95*2
800	400	2	150*2P	150	120*2
1000	500	2	95*4P	95*2P	95*3
1200	630	2	95*4P	95*2P	150*3
1500	500	3	95*4P	95*2P	95*3
2000	500	4	95*4P	95*2P	95*3
2500	630	4	95*4P	95*2P	150*3
3000	630	5	95*4P	95*2P	150*3

Note:

1. It is appropriate to use the recommended cable size under 40℃ and rated current. The

wiring distance should be no more than 100m.

2. Terminals P1, (+), PB and (-) connect the DC reactor options and parts.

D.1.4 Cable configuring

	Master	Slave 1	Slave 2	Slave 3	Slave 4	Slave 5
RST input cable	Prepared by the user	Prepared by the user	Prepared by the user	Prepared by the user	Prepared by the user	Prepared by the user
UVW output cable	Prepared by the user	Prepared by the user	Prepared by the user	Prepared by the user	Prepared by the user	Prepared by the user

	Master	Master-Slave 1	Slave 1-Slave 2	Slave 2-Slave 3	Slave 3-Slave 4	Slave 4-Slave 5
(+), (-) bus cable for parallel connection	-	Standard	Standard	Standard	Standard	Standard

	Master	Master-Slave 1	Master-Slave 2	Master-Slave 3	Master-Slave 4	Master-Slave 5
Optical fiber for parallel connection	Standard	Standard	Standard	Standard	Standard	Standard
15-core serial port cable for parallel connection	Standard	Standard	Standard	Standard	Standard	Standard

D.2 Breaker and electromagnetic contactor

It is appropriate to use a breaker (MCCB) which complies with the inverter power in the 3-phase AC power and input power and terminals (R,S,T). The capacity of the inverter should be 1.5-2 times of the rated current.

It is recommended to add fuse for the avoidance of overload.

	✧Due to the inherent operating principle and construction of circuit breakers, independent of the manufacturer, hot ionized gases may escape from the breaker enclosure in case of a short-circuit. To ensure safe use, special attention must be paid to the installation and placement of the breakers. Follow the manufacturer's instructions.

It is necessary to install the electromagnetic contactor in the input side to control the switching on and off safety of the main circuit. It can switch off the input power supply when system fault.

D.2.1 AC 3PH 380V(-15%)~440V(+10%)

The following selection table is for the fuse/breaker of single inverter while the fuse/breaker of inverters in parallel connection should be 2 times of the rated current (refer to 1.2 for the rated current in parallel connection).

Inverter power	Fuse (A)	Breaker (A)	The rated working current of the contactor (A)
280kW	1500	1000	780
315kW	1740	1200	900
350kW	1860	1280	960
400kW	2010	1380	1035
500kW	2505	1720	1290

Note: The specifications can be adjusted according to the actual working, but it can not be less than the designated values.

D.2.2 AC 3PH 520V(-15%)~690V(+10%)

The following selection table is for the fuse/breaker of single inverter while the fuse/breaker of inverters in parallel connection should be 2 times of the rated current (refer to 1.2 for the rated current in parallel connection).

Inverter power	Fuse (A)	Breaker (A)	The rated working current of the contactor (A)
350kW	1110	630	580
400kW	1230	800	630
500kW	1500	1000	780
630kW	2010	1380	1035

Note: The specifications can be adjusted according to the actual working, but it can not be less than the designated values.

D.3 Reactor

High current in the input power circuit may cause damage to the rectifying components. It is appropriate to use AC reactor in the input side for the avoidance of high-voltage input of the power supply and improvement of the power factors.

If the distance between the inverter and the motor is longer than 50m, frequent overcurrent protection may occur to the inverter because of high leakage current caused by parasitic capacitance effects from the long cables to the ground. In order to avoid the damage of the motor insulation, it is necessary to add reactor compensation.

The inverters of 380V and of 660V are equipped with external DC reactors for the improvement of power factors and the avoidance of damage from high input current to the rectifying components because of the high-capacity transformer. The device can also cease the damage to the rectifying components which are caused by supply net voltage transients and harmonic waves of the loads.

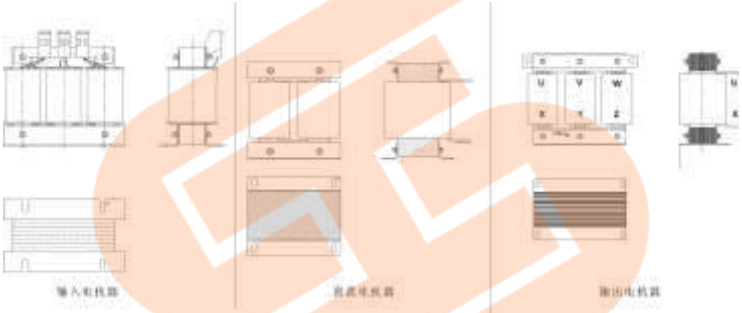

Vertical reactors of 380V below 315kW and 660V below 350kW

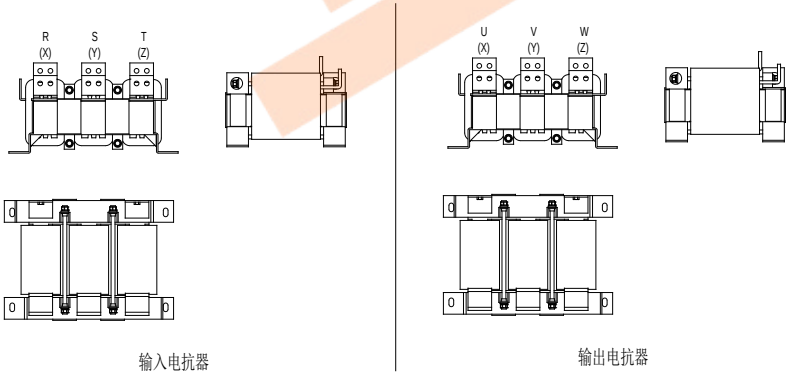

Horizontal reactors of 380V 350~500kW and 660V 400~630kW

D.3.1 AC 3PH 380V(-15%)~440V(+10%)

The following selection table is for the reactors of single inverter.

Inverter power	Input reactor	DC reactor	Output reactor
280kW	ACL2-280-4(standard)	DCL2-280-4(optional)	OCL2-280-4(standard)
315kW	ACL2-315-4(standard)	DCL2-315-4(optional)	OCL2-315-4(standard)
350kW	ACL2-350-4(standard)	DCL2-350-4(optional)	OCL2-350-4(standard)
400kW	ACL2-400-4(standard)	DCL2-400-4(optional)	OCL2-400-4(standard)
500kW	ACL2-500-4(standard)	DCL2-500-4(optional)	OCL2-500-4(standard)

Note:

1. The rated derate voltage of the input reactor is 2%±15%.

2. The power factor of the input side is above 90% after installing DC reactor.

3. The rated derate voltage of the output reactor is 1%±15%.

4. Above options are external, the customer should indicate when purchasing.

D.3.2 AC 3PH 520V(-15%)~690V(+10%)

The following selection table is for the reactors of single inverter.

Inverter power	Input reactor	DC reactor	Output reactor
350kW	ACL2-350G-6(standard)	DCL2-350G-6(optional)	OCL2-350G-6(standard)
400kW	ACL2-400G-6(standard)	DCL2-400G-6(optional)	OCL2-400G-6(standard)
500kW	ACL2-500G-6(standard)	DCL2-500G-6(optional)	OCL2-500G-6(standard)
630kW	ACL2-630G-6(standard)	DCL2-630G-6(optional)	OCL2-630G-6(standard)

Note:

1. The rated derate voltage of the input reactor is 2%±15%.

2. The power factor of the input side is above 90% after installing DC reactor.

3. The rated derate voltage of the output reactor is 1%±15%.

4. Above options are external, the customer should indicate when purchasing.

D.4 Filter

Goodrive series inverters have embedded C3 filters which can be connected by J10.

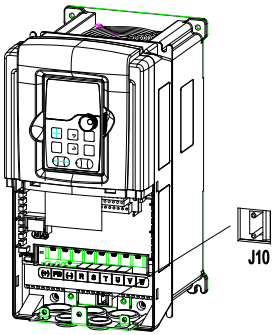

Note: Do not connect C3 filters in IT power system.

The input interference filter can decrease the interference of the inverter to the surrounding equipments.

Output interference filter can decrease the radio noise cause by the cables between the inverter and the motor and the leakage current of the conducting wires.

Our company configured some filters for the convenience of the users.

D.4.1 Filter type instruction

FLT-P04045L-B

A B C D E F

Character designation	Detailed instruction
A	FLT: inverter filter series
B	Filter type P: power supply filter L: output filter
C	Voltage degree 04: AC 3PH 380V(-15%)~440V(+10%) 06: AC 3PH 520V(-15%)~690V(+10%)
D	3 bit rated current code “015” means 15A
E	Installation type L: Common type H: High performance type
F	Utilization environment of the filters

Character designation	Detailed instruction
	A: the first envirtonment(IEC61800-3:2004)category C1(EN 61800-3:2004) B: the first envirtonment(IEC61800-3:2004)category C2(EN 61800-3:2004) C: the second envirtonment(IEC61800-3:2004)category C3(EN 61800-3:2004)

D.4.2 AC 3PH 380V(-15%)~440V(+10%)

The following selection table is for the filters of single inverter.

Inverter power	Input filter	Output filter
280kW	FLT-P04600L-B	FLT-L04600L-B
315kW	FLT-P04800L-B	FLT-L04800L-B
350kW		
400kW		
500kW	FLT-P041000L-B	FLT-L041000L-B

D.4.3 AC 3PH 520V(-15%)~690V(+10%)

The following selection table is for the filters of single inverter.

Inverter power	Input filter	Output filter
350kW	FLT-P06400H-B	FLT-L06400H-B
400kW	FLT-P061000H-B	FLT-P061000H-B
500kW		
630kW		

Note:

1. The input EMI meet the requirement of C2 after installing input filters.

2. Above options are external, the customer should indicate when purchasing.

D.5 Braking system

D.5.1 Select the braking components

It is appropriate to use braking resistor or braking unit when the motor brakes sharply or the motor is driven by a high inertia load. The motor will become a generator if its actual rotating speed is higher than the corresponding speed of the reference frequency. As a result, the inertial energy of the motor and load return to the inverter to charge the capacitors in the main DC circuit. When the voltage increases to the limit, damage may occur to the inverter. It is necessary to apply braking unit/resistor to avoid this accident happens.



✧**Only qualified electricians are allowed to design, install, commission and operate on the inverter.**

	✧**Follow the instructions in "warning" during working. Physical injury or death or serious property may occur.** ✧**Only qualified electricians are allowed to wire. Damage to the inverter or braking options and part may occur. Read carefully the instructions of braking resistors or units before connecting them with the inverter.** ✧**Do not connect the braking resistor with other terminals except for PB and (+). Do not connect the braking unit with other terminals except for (+) and (-). Damage to the inverter or braking circuit or fire may occur.**
	✧**Connect the braking resistor or braking unit with the inverter according to the diagram. Incorrect wiring may cause damage to the inverter or other devices.**

D.5.2 AC 3PH 380V(-15%)~440V(+10%)

Goodrive series 380V large power inverters in parallel connection need external braking units. Please select the resistance and power of the braking resistors according to the actual operation (requirements of braking torque and braking usage ratio).

The following selection table is for the braking units of single inverter.

Inverter power	Model of braking unit	Braking resistance at 100% of the braking torque(Ω)	The cousumped power of the braking resistor(kW)			Min. allowable braking resistance (Ω)
			10% braking	50% braking	80% braking	
280kW	Two DBU100H-320-4	3.6*2	21*2	105*2	168*2	2.2 *2
315kW		3.2*2	24*2	118*2	189*2	
350kW		2.8*2	27*2	132*2	210*2	
400kW		2.4*2	30*2	150*2	240*2	
500kW	Two DBU100H-400-4	2*2	38*2	186*2	300*2	1.8*2

Note:

Select the resistance and power of the braking units according to the data our company provided.

The braking resistor may increase the braking torque of the inverter. The resistor power in the above table is designed on 100% braking torque and 10%, 50% and 80% braking usage ratio. The users can select the braking system according to the actual operation.

When using the external braking units, please see the instructions of the energy braking units

to set the voltage degree of the braking unit. Incorrect voltage degree may affect the normal running of the inverter.

	**✧Never use a braking resistor with a resistance below the minimum value specified for the particular inverter. The inverter inside cannot handle the overcurrent caused by the low resistance.**
	**✧Increase the power of the braking resistor properly in the frequent braking situation (the frequency usage ratio is more than 10%).**

D.5.3 AC 3PH 520V(-15%)~690V(+10%)

Goodrive series 660V large power inverters in parallel connection need external braking units. Please select the resistance and power of the braking resistors according to the actual operation (requirements of braking torque and braking usage ratio).

The following selection table is for the braking units of single inverter.

Inverter power	Model of braking unit	Braking resistance at 100% of the braking torque(Ω)	The cousumped power of the braking resistor(kW)			Min. allowable braking resistance (Ω)
			10% braking	50% braking	80% braking	
350 kW	DBU100H-320-6	3.5	53	263	420	3.4
400 kW	DBU100H-400-6	3.0	60	300	480	2.8
500 kW	Two DBU100H-320-6	4.8*2	38*2	188*2	300*2	3.4*2
630 kW		3.8*2	47*2	236*2	378*2	

Note:

Select the resistance and power of the braking units according to the data our company provided.

The braking resistor may increase the braking torque of the inverter. The resistor power in the above table is designed on 100% braking torque and 10%, 50% and 80% braking usage ratio. The users can select the braking system according to the actual operation.

When using the external braking units, please see the instructions of the energy braking units to set the voltage degree of the braking unit. Incorrect voltage degree may affect the normal running of the inverter.

	✧**Never use a braking resistor with a resistance below the minimum value specified for the particular inverter. The inverter inside cannot handle the overcurrent caused by the low resistance.**
	✧**Increase the power of the braking resistor properly in the frequent braking situation (the frequency usage ratio is more than 10%).**

D.5.4 Selecting the braking resistor cables

Use a shielded cable to the resistor cable.

D.5.5 Installing the braking resistor

Install all resistors in a place with enough ventilation.

	✧**The materials near the braking resistor must be non-flammable. The surface temperature of the resistor is high. Air flowing from the resistor is of hundreds of degrees Celsius. Protect the resistor against contact.**

Installation of braking units:

	✧**Goodrive large power inverters in parallel connection need external braking units.** ✧ **(+), (-) are the wiring terminals of the braking units.** ✧**The wiring length between the (+), (-) terminals of the inverter and the (+), (-) terminals of the braking units should be less than 5m, and the distributing length among BR1 and BR2 and the braking resistor terminals should be less than 10m.**

Signal installation is as below:

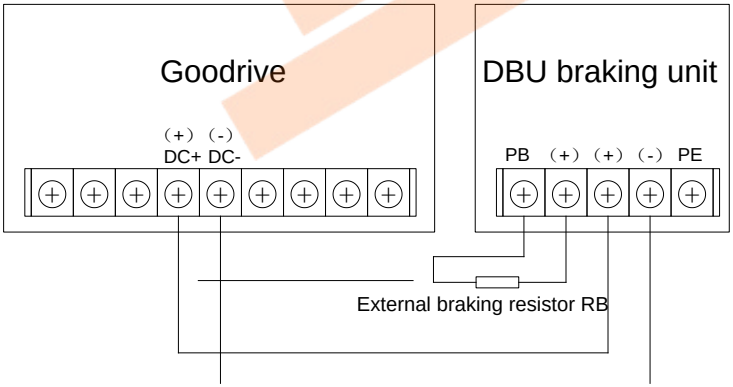

Service line:86-755-86312859 E-mail:overseas@invt.com.cn Website:www.invt.com

The products are owned by **Shenzhen INVT Electric Co.,Ltd.**
Two companies are commissioned to manufacture: (For product code, refer to the 2nd/3rd place of S/N on the name plate.)

Shenzhen INVT Electric Co., Ltd. (origin code: 01)
Address: INVT Guangming Technology Building, Songbai Road, Matian, Guangming District, Shenzhen, China

INVT Power Electronics (Suzhou) Co., Ltd. (origin code: 06)
Address: 1# Kunlun Mountain Road, Science&Technology Town, Gaoxin District, Suzhou, Jiangsu, China

Industrial Automation: ■Frequency Inverter ■Servo & Motion Control ■Motor & Electric Spindle ■PLC
■HMI ■Intelligent Elevator Control System ■Traction Drive

Electric Power: ■SVG ■Solar Inverter ■UPS ■Online Energy Management System

66001-00375

INVT Copyright.
Information may be subject to change without notice during product improving.

201811 (V1.2)