www.electroshaili.com Electro Shaili الکتروشایلی

Goodrive20 Series

Vector Control VFD



Management Service

invt

www.electroshaili.ir ۰۲۱-۶۶۳۴۴۷۱۴ ۰۹۱۲-۶۳۹۸۹۶۱ ۰۹۱۰-۷۲۴۹۰۷۴ ۰۲۱-۶۶۱۷۰۰۶۲-۵ ۰۲۱-۹۲۰۰۶۶۱۷ (ده خط)

Introduction 2
Features 3
Optimized structure design 3
Excellent performance 4
Multi-function and easy to use 5
Reliable QA 8
Applications 10
Technical specifications 11
Selection 12
Type designation key 12
Rated parameters 12
Standard wiring 13
Installation dimension 13
Optional parts 17

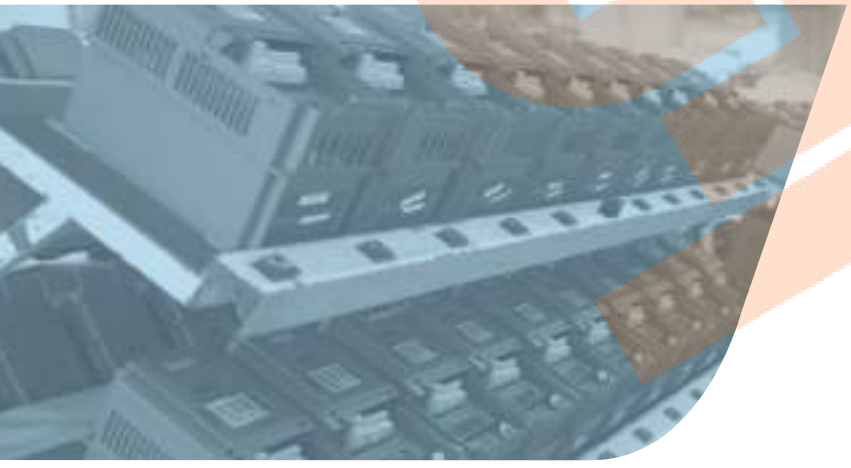





Introduction

Goodrive20 series VFDs feature excellent drive and control performance for using of sensorless vector control technology, and improve usability and reliability for the enriched hardware configurations and software functions, meeting different industrial applications.







Features

Optimized structure design

Optimized spare utilization, models (≥18.5kW) is much smaller than existing VFDs.

Size compared with GD200A

Power Rate	Size of GD20 (W*H*D)	Size of GD200A (W*H*D)	Size decreased than GD200A
18.5kW	200*340.6*184.3	230*342*216	26%
22kW	200*340.6*184.3	255*407*245	51%
30kW	250*400*202	255*407*245	21%
37kW	250*400*202	270*555*325	59%
45kW	282*560*238	270*555*325	23%
55kW	282*560*238	270*555*325	23%
75~110kW	338*554*329.2	325*680*365	24%

Mini design for VFDs (≤ 2.2kW); abreast installation of multiple VFDs, reducing installation space



Flexible installation ways

VFDs (≤ 2.2kW) support wall mounting and rail mounting.



Rail mounting



Wall mounting

VFDs (≥4kW) support wall mounting and flange mounting.



Excellent Performance

Excellent vector control performance



Current waveforms in vector control mode with 50Hz and full load

Excellent motor drive performance

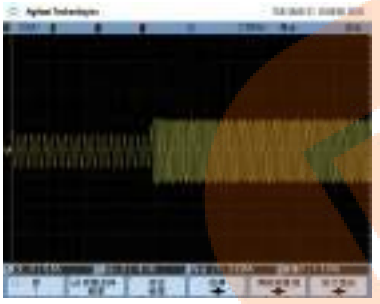

Current waveforms when sudden loading in V/F control mode with 2Hz and full load

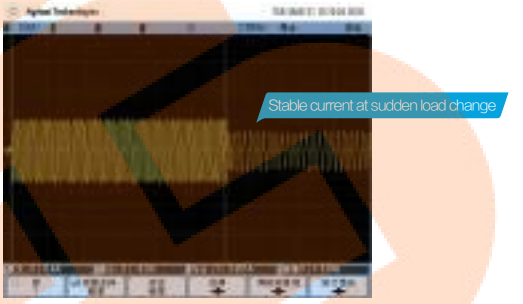

Current waveforms when sudden unloading in V/F control mode with 2Hz and full load

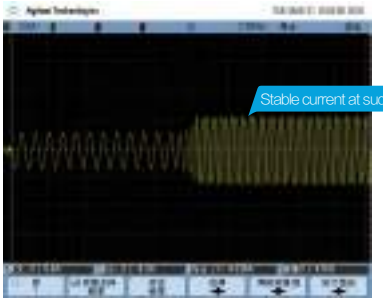

Current waveforms when sudden loading in vector control mode with 0.5Hz and full load

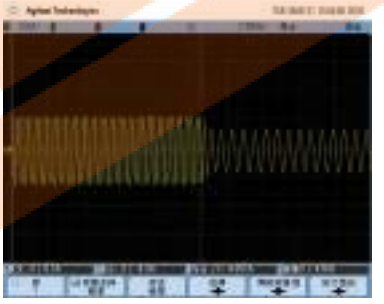

Current waveforms when sudden unloading in vector control mode with 0.5Hz and full load

Excellent high-frequency running performance

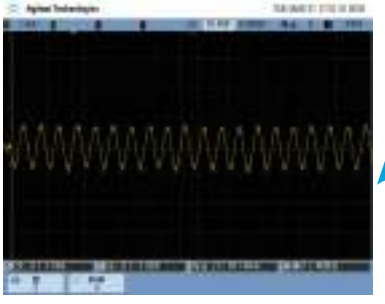

Current waveforms when sudden loading in vector control mode with 0.5Hz and full load



Current waveforms when sudden unloading in vector control mode with 0.5Hz and full load

Multi-function and easy to use

DC reactors are built-in VFDs ≥18.5kW



The braking unit is built-in and standard for VFDs ≤37kW but optional for VFDs of 45-110kW.

Dynamic braking can be implemented by only configuring braking resistors, reducing occupation space.

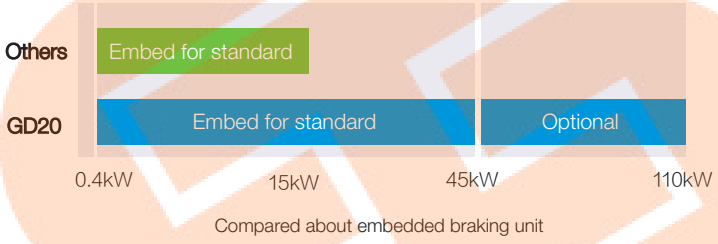

Compared about embedded braking unit

VFDs (380V; ≥4kw) support the DC bus sharing solution.

Dynamic braking can be implemented by only configuring braking resistors, reducing occupation space.

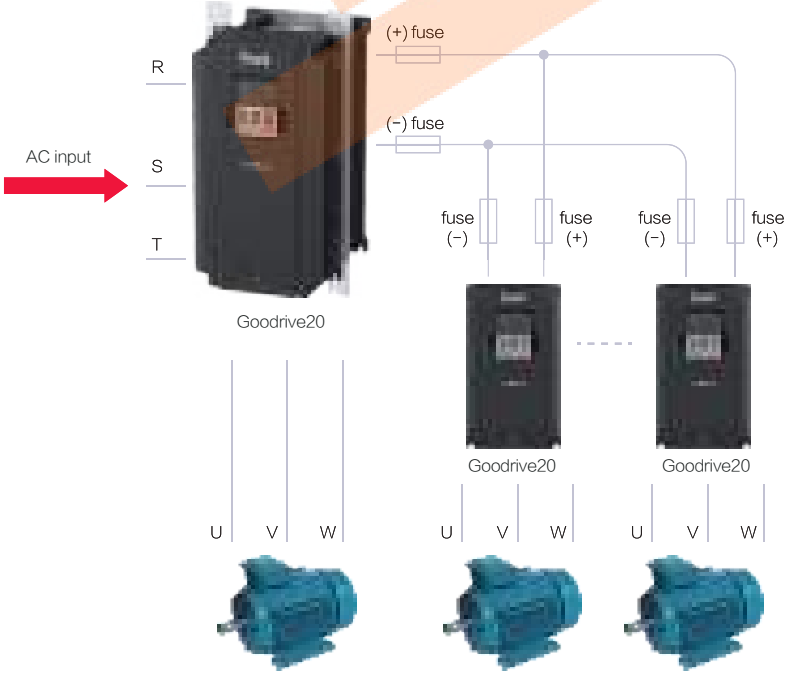

Built-in Safety Torque Off function

GD20 series VFD support Built-in Safety Torque Off function, and passed the certification as followed:

Model	Certification standard and grade					
	IEC 61508		EN/ISO 13849-1		EN954-1	
-S2:0.4~2.2kW -2:0.4~0.75kW -4:0.75~2.2kW	SIL	2	PL	d	Category	3
-2:1.5~7.5kW -4:4~110kW	SIL	3	PL	e	Category	3

C3 and C2 filters

C3 filters are built in VFDs (3PH; 380V; ≥4kW) and (3PH; 220V; ≥ 1.5kW) by using J10 to determine the connection or disconnection. External C3 filters can be configured for VFDs (1PH; 220V; ≤2.2kW), (3PH; 380V; ≤2.2kW) and (3PH; 220V; ≤0.75kW).

External C2 filters are optional for all GD20 series VFDs.

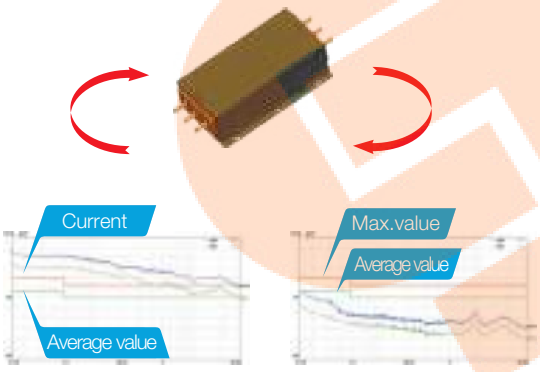

Before installing the filter After installing the filter

Conductive interference test of the power supply terminals

Remarks:
C2 filter: EMC performance of the VFD achieves the limited usage requirement in civil environment.
C3 filter: EMC performance of the VFD achieves the limited usage requirement in industrial environment.

Support of external keypad

The membrane keypad are standard for VFDs (380V; ≤2.2kW), which also support external LED keypads. The keypads for VFDs (3PH; 380V; ≥4kW) can be used as external keypads.

GD20 series VFDs can be configured with LED keypad which has the data copy function to upload or download the parameters.



Pluggable design for cooling fans, making maintenance easy



Abundant software functions

Function	Used to	Remarks
RS485 communication	Read and modify VFD parameters through connection to the upper computer so as to control VFD running status.	Configured with RS485 communication interface
PID	Carry out PID operation on feedback signals to control VFD output frequency and improve target accuracy and stability. Applicable to pressure, flow and temperature process control.	Supports PID output polarity switching.
Motor parameter autotuning	Carry out rotation or static autotuning, improving control accuracy and response speed.	Classified into rotation autotuning and static autotuning.
Simple PLC function	Change the running frequency and direction automatically according to the running time set by simple PLC to meet process requirements.	Supports multiple running modes.
Multi-step speed control	Meet the speed control requirements in different periods of time.	A maximum of 16 steps can be divided for multi-step speed control.
Multiple V/F curve settings	Meet the requirements of energy-saving operation for fans and water pumps and of various variable frequency power supplies; adapt to different load applications.	Linear, multi-dot, multi-power and V/F separation settings, implementing flexible setting of V/F curves.
Virtual terminals	Take external signals as local virtual I/O to reduce hardware configuration.	Corresponding virtual terminal functions must be enabled in communication mode.
Delay of switching on and off	Provide more programming and control modes	Max. switching on/off delay is 50s
Uninterrupted running in instantaneous power off	Ensure uninterrupted running in instantaneous power off. Especially applicable to the situations with high requirements on continuous operation.	At transient voltage drop, the VFD can keep running by feedback energy without stop in valid time.
Various protection functions	Provide overall fault protection functions.	Various measures provided to protect against faults such as overcurrent, overvoltage, undervoltage, overheating, and overload, whose information can be saved.
Multiple braking modes available	Provide multiple braking modes, satisfying accurate and quick stop under different loads.	DC braking, flux braking, dynamic braking
Battery capacity display	Display the accumulative power consumption on the VFD without watt-hour meter.	VFD power consumption can be queried.

Reliable QA

Goodrive20 is designed follow the IEC standards and passes the CE test.

Exact thermal design is made based on advanced thermal technology.

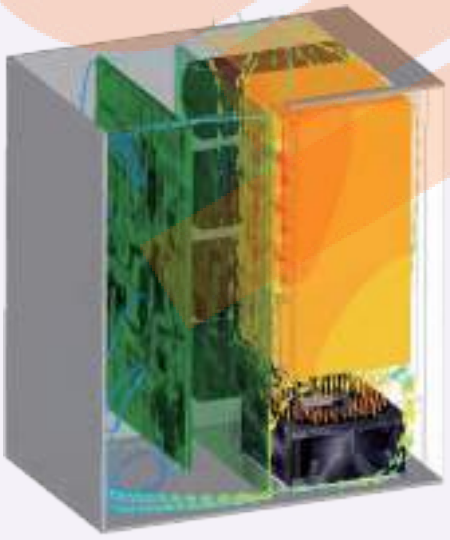

Perfect and Reliable Test System Ensure Products Adapt Complicated Site Environments and Achieved ACT Certificate of TÜV SÜD

Experiment Type	Experiment Name	Classification
Mechanical Reliability Experiments	Packaging Experiments	Package compression experiments
		Package Resonance imaging and storage test
		Package random vibration test
		Package dropping test
		Package rolling test
		Package dumping test
		Package inclined impact test
	Impact Test	Half-sine shock test(working and non-working state)
		Trapezoidal wave impulse test(non-working state)
	Vibration Test	Sinusoidal vibration test(working state)
		Random vibration test(working and non-working state)
Climatic Environmental Reliability Test	Temperature Experiment	Low temperature storage test
		High temperature storage test
		Low temperature working test
		High temperature working test
		Gradient temperature change test
		Temperature impact test
	Temperature Humidity Test	Constant temperature & humidity test
		Alternation temperature & humidity test
	Salt Spray Test	Constant salt spray test
		Alternation salt spray test
	Low Air Pressure Test	Combined dry heat & low air pressure test
		Combined cold & low air pressure test

Remarks:
The full name of ACT is Acceptance of Client's Testing, which means the German TÜV SÜD admit the technology level of the lab and accept their separate testing data and test reports officially.



Electric Vibration System



Low Prssure Test Chamber& Constant temperature and humidity test chamber



Faster temperature chamber& Thermal Shock Test Chamber

Applications

Textile machinery



Food machinery



Plastic machinery



Printing and packaging



Environmental protection equipment



Ceramic equipment



Woodworking equipment



Conveying equipment



Air compressor



Cable machinery



Technical specification

Function		Specification
Power input	Input voltage (V)	1PH 220V (-15%)~240V(+10%) 3PH 220V(-15%)~240V(+10%) 3PH 380V (-15%)~440V(+10%)
	Input current (A)	Refer to the rated value
	Input frequency (Hz)	50Hz or 60Hz, allowed range: 47~63Hz
Power output	Output motor capacity (kW)	Refer to the rated value
	Output current (A)	Refer to the rated value
	Output voltage (V)	0~input voltage, error<5%
	Output frequency (Hz)	0~400Hz
Technical control feature	Control mode	SVPWM, SVC
	Adjustable-speed ratio	1:100
	Speed control accuracy	±0.2% (SVC)
	Speed fluctuation	± 0.3% (SVC)
	Torque response	<20ms (SVC)
	Torque control accuracy	10%
	Starting torque	0. 5Hz/150% (SVC)
	Overload capability	150% of rated current: 1 minute 180% of rated current: 10 seconds 200% of rated current: 1 second
Running control feature	Frequency setting method	Digital setting, analog setting, pulse frequency setting, multi-step speed running setting, simple PLC setting, PID setting, MODBUS communication setting Shift between the set combination and set channel.
	Auto-adjustment of the voltage	Keep a stable voltage automatically when the grid voltage transients
	Fault protection	Provide comprehensive fault protection functions: over-current, over-voltage, under-voltage, over-heating, phase loss and overload, etc.
Peripheral interface	Analog input	1 (AI2) 0~10V/0~20mA and 1 (AI3) -10~10V
	Analog output	2 (AO1, AO2) 0~10V/0~20mA
	Digital input	4 common inputs, the Max. frequency: 1kHz; 1 high speed input, the Max. frequency: 50kHz
	Digital output	1 Y1 terminal output;
	Relay output	2 programmable relay outputs RO1A NO, RO1B NC, RO1C common terminal RO2A NO, RO2B NC, RO2C common terminal Contactor capacity: 3A/AC250V
Others	Mountable method	Wall and rail mountable
	Braking unit	Embedded
	EMI filter	Optional filter: meet the degree requirement of IEC61800-3 C2, IEC61800-3 C3
	Temperature of the running environment	-10~50°C Above 40°C, derate 1% for every additional 1°C.
	Altitude	<1000m Above 1000m, derate 1% for every additional 100m.
	Protective degree	IP20
	Safety	Meet the requirement of CE
	Cooling	Fan cooling

Selection

Type designation key

GD20–055G–4–B–EU

① ② ③ ④ ⑤

Key	No.	Detailed description	Detailed content
Abbreviation	①	Product abbreviation	GD20 is short for Goodrive20
Rated power	②	Power range+load type	055-55kW G: constant torque load
Voltage degree	③	Voltage degree	S2: AC 1PH 220V(-15%)~240V(+10%) 2: AC 3PH 220V(-15%)~240V(+10%) 4: AC 3PH 380V(-15%)~440V(+10%)
Additional information 1	④	Braking unit	B: With built-in braking unit for VFDs ≥45kW; Standard VFDs ≥45kW without built-in braking unit, B is not displayed
Additional information 2	⑤	Special function	EU: built-in Safety Torque Off function; Without EU, without the function

Rated parameters

Model	Voltage degree	Output power (kW)	Input current (A)	Output current (A)
GD20-0R4G-S2	1PH 220V	0.4	6.5	2.5
GD20-0R7G-S2		0.75	9.3	4.2
GD20-1R5G-S2		1.5	15.7	7.5
GD20-2R2G-S2		2.2	24	10
GD20-0R4G-2	3PH 220V	0.4	3.7	2.5
GD20-0R7G-2		0.75	5	4.2
GD20-1R5G-2		1.5	7.7	7.5
GD20-2R2G-2		2.2	11	10
GD20-004G-2		4	17	16
GD20-5R5G-2		5.5	21	20
GD20-7R5G-2		7.5	31	30
GD20-0R7G-4	3PH 380V	0.75	3.4	2.5
GD20-1R5G-4		1.5	5.0	4.2
GD20-2R2G-4		2.2	5.8	5.5
GD20-004G-4		4	13.5	9.5
GD20-5R5G-4		5.5	19.5	14
GD20-7R5G-4		7.5	25	18.5
GD20-011G-4		11	32	25
GD20-015G-4		15	40	32
GD20-018G-4		18.5	47	38
GD20-022G-4		22	51	45
GD20-030G-4		30	70	60
GD20-037G-4		37	80	75
GD20-045G-4		45	98	92
GD20-055G-4		55	128	115
GD20-075G-4		75	139	150
GD20-090G-4		90	168	180
GD20-110G-4		110	201	215

Standard wiring

Wiring diagram of control circuit

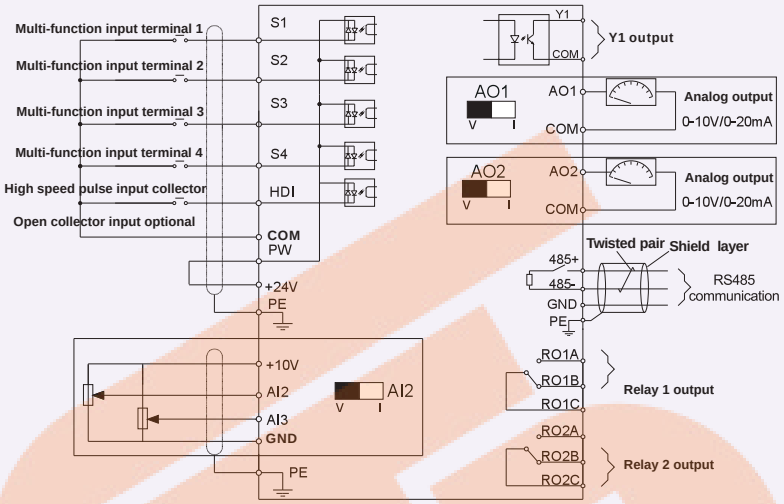

Installation dimension

External keypad dimension

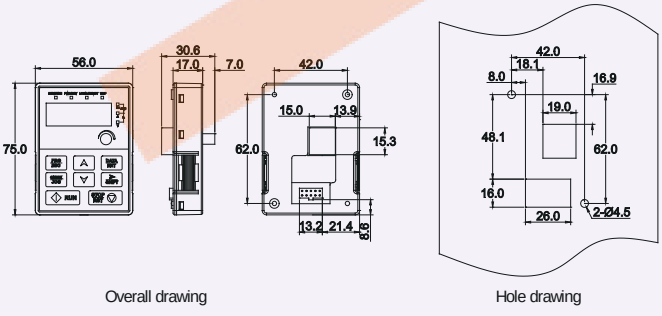

Overall drawing　　Hole drawing

Note: The external keypad can be 20 meters away from the VFD at most.

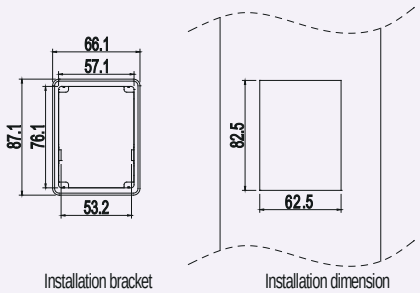

Installation bracket　　Installation dimension

VFD dimensions

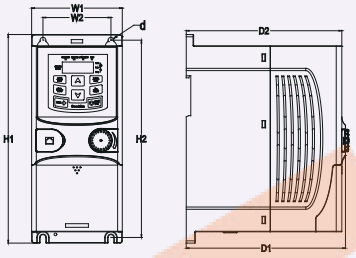

Wall mounting of 0.75~2.2kW VFDs

Dimensions (unit: mm)

Model	W1	W2	H1	H2	D1	D2	Hole (d)
GD20-0R4G-S2	80.0	60.0	160.0	150.0	123.5	120.3	5
GD20-0R7G-S2	80.0	60.0	160.0	150.0	123.5	120.3	5
GD20-1R5G-S2	80.0	60.0	185.0	175.0	140.5	137.3	5
GD20-2R2G-S2	80.0	60.0	185.0	175.0	140.5	137.3	5
GD20-0R4G-2	80.0	60.0	185.0	175.0	140.5	137.3	5
GD20-0R7G-2	80.0	60.0	185.0	175.0	140.5	137.3	5
GD20-0R7G-4	80.0	60.0	185.0	175.0	140.5	137.3	5
GD20-1R5G-4	80.0	60.0	185.0	175.0	140.5	137.3	5
GD20-2R2G-4	80.0	60.0	185.0	175.0	140.5	137.3	5

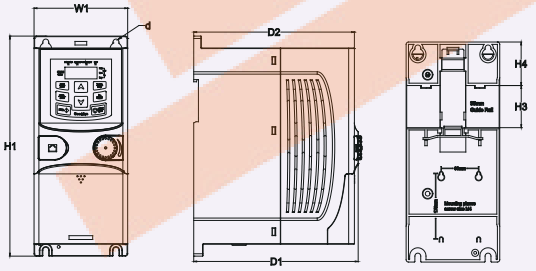

Rail mounting of VFDs of 1PH 220V/3PH 380V (≤2.2kW) and 3PH 220V (≤0.75kW)

Dimensions (unit: mm)

Model	W1	W2	H1	H2	D1	D2	Hole (d)
GD20-0R4G-S2	80.0	160.0	35.4	36.6	123.5	120.3	5
GD20-0R7G-S2	80.0	160.0	35.4	36.6	123.5	120.3	5
GD20-1R5G-S2	80.0	185.0	35.4	36.6	140.5	137.3	5
GD20-2R2G-S2	80.0	185.0	35.4	36.6	140.5	137.3	5
GD20-0R4G-2	80.0	185.0	35.4	36.6	140.5	137.3	5
GD20-0R7G-2	80.0	185.0	35.4	36.6	140.5	137.3	5
GD20-0R7G-4	80.0	185.0	35.4	36.6	140.5	137.3	5
GD20-1R5G-4	80.0	185.0	35.4	36.6	140.5	137.3	5
GD20-2R2G-4	80.0	185.0	35.4	36.6	140.5	137.3	5

Installation dimension

VFD dimensions

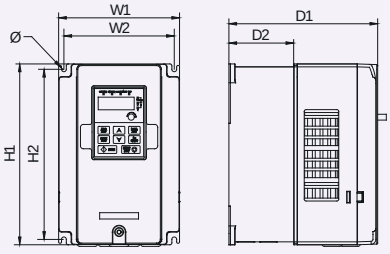

Wall mounting of 3PH 380V 4~37kW and 3PH 220V 1.5~7.5 kW VFDs

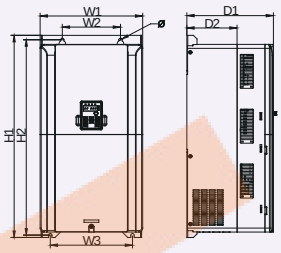

Wall mounting of 3PH 380V 45~75kW VFDs

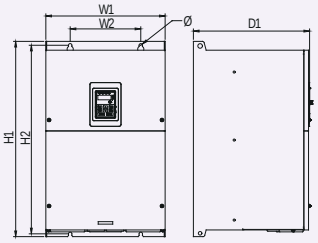

Wall mounting of 3PH 380V 90~110kW VFDs

Dimensions (unit: mm)

Model	W1	W2	W3	H1	H2	D1	D2	Hole (d)
GD20-1R5G-2	146.0	131.0	—	256.0	243.5	167.0	84.5	6
GD20-2R2G-2	146.0	131.0	—	256.0	243.5	167.0	84.5	6
GD20-004G-2	146.0	131.0	—	256.0	243.5	167.0	84.5	6
GD20-5R5G-2	170.0	151.0	—	320.0	303.5	196.3	113.0	6
GD20-7R5G-2	170.0	151.0	—	320.0	303.5	196.3	113.0	6
GD20-004G-4	146.0	131.0	—	256.0	243.5	167.0	84.5	6
GD20-5R5G-4	146.0	131.0	—	256.0	243.5	167.0	84.5	6
GD20-7R5G-4	170.0	151.0	—	320.0	303.5	196.3	113.0	6
GD20-011G-4	170.0	151.0	—	320.0	303.5	196.3	113.0	6
GD20-015G-4	170.0	151.0	—	320.0	303.5	196.3	113.0	6
GD20-018G-4	200.0	185.0	—	340.6	328.6	184.3	104.5	6
GD20-022G-4	200.0	185.0	—	340.6	328.6	184.3	104.5	6
GD20-030G-4	250.0	230.0	—	400.0	380.0	202.0	123.5	6
GD20-037G-4	250.0	230.0	—	400.0	380.0	202.0	123.5	6
GD20-045G-4	282.0	160.0	226.0	560.0	542.0	238.0	138.0	9
GD20-055G-4	282.0	160.0	226.0	560.0	542.0	238.0	138.0	9
GD20-075G-4	282.0	160.0	226.0	560.0	542.0	238.0	138.0	9
GD20-090G-4	338.0	200.0	—	554.0	535.0	329.2	—	9.5
GD20-110G-4	338.0	200.0	—	554.0	535.0	329.2	—	9.5

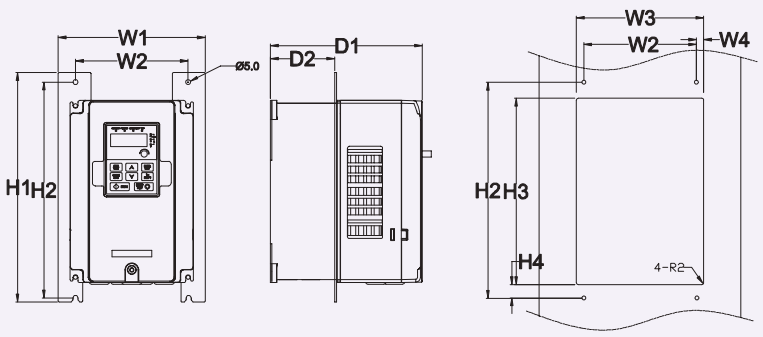

Flange mounting of 3PH 380V 4~75kW and 3PH 220V 1.5~7.5kW VFDs

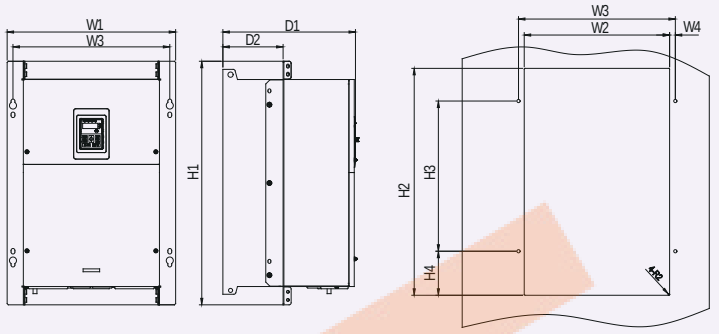

Flange mounting of 3PH 380V 90~110kW VFDs

Dimensions (unit: mm)

Model	W1	W2	W3	W4	H1	H2	H3	H4	D1	D2	Hole (d)	Nut
GD20-1R5G-2	170.2	131	150	9.5	292	276	260	6	167	84.5	6	M5
GD20-2R2G-2	170.2	131	150	9.5	292	276	260	6	167	84.5	6	M5
GD20-004G-2	170.2	131	150	9.5	292	276	260	6	167	84.5	6	M5
GD20-5R5G-2	191.2	151	174	11.5	370	351	324	12	196.3	113	6	M5
GD20-7R5G-2	191.2	151	174	11.5	370	351	324	12	196.3	113	6	M5
GD20-004G-4	170.2	131	150	9.5	292	276	260	6	167	84.5	6	M5
GD20-5R5G-4	170.2	131	150	9.5	292	276	260	6	167	84.5	6	M5
GD20-7R5G-4	191.2	151	174	11.5	370	351	324	12	196.3	113	6	M5
GD20-011G-4	191.2	151	174	11.5	370	351	324	12	196.3	113	6	M5
GD20-015G-4	191.2	151	174	11.5	370	351	324	12	196.3	113	6	M5
GD20-018G-4	266	250	224	13	371	250	350.6	20.3	184.6	104	6	M5
GD20-022G-4	266	250	224	13	371	250	350.6	20.3	184.6	104	6	M5
GD20-030G-4	316	300	274	13	430	300	410	55	202	118.3	6	M5
GD20-037G-4	316	300	274	13	430	300	410	55	202	118.3	6	M5
GD20-045G-4	352	332	306	13	580	400	570	80	238	133.8	9	M8
GD20-055G-4	352	332	306	13	580	400	570	80	238	133.8	9	M8
GD20-075G-4	352	332	306	13	580	400	570	80	238	133.8	9	M8
GD20-090G-4	418.5	361	389.5	14.2	600	559	370	108.5	329.5	149.5	9.5	M8
GD20-110G-4	418.5	361	389.5	14.2	600	559	370	108.5	329.5	149.5	9.5	M8
GD20-022G-4	200.0	185.0	—	340.6	328.6	184.3	184.3	104.5	184.3	104.5	6	184.3
GD20-030G-4	250.0	230.0	—	400.0	380.0	202.0	202.0	123.5	202.0	123.5	6	202.0
GD20-037G-4	250.0	230.0	—	400.0	380.0	202.0	202.0	123.5	202.0	123.5	6	202.0
GD20-045G-4	282.0	160.0	226.0	560.0	542.0	238.0	238.0	138.0	238.0	138.0	9	238.0
GD20-055G-4	282.0	160.0	226.0	560.0	542.0	238.0	238.0	138.0	238.0	138.0	9	238.0
GD20-075G-4	282.0	160.0	226.0	560.0	542.0	238.0	238.0	138.0	238.0	138.0	9	238.0
GD20-090G-4	338.0	200.0	—	554.0	535.0	329.2	329.2	—	329.2	—	9.5	329.2
GD20-110G-4	338.0	200.0	—	554.0	535.0	329.2	329.2	—	329.2	—	9.5	329.2

Note: In flange installation mode, the installation bracket is optional

Optional parts

External LED keypad

Including the external keypads with or without the parameter copying function.



Reactor

Input reactor: Improve the power factor of the input side of the VFD and control the higher harmonic current.

Output reactor: Prolong the effective transmitting distance of the VFD and control the sudden high voltage when switching on/off the IGBT of the VFD.



Filter

Input filter: Control the electromagnetic interference generated from the VFD, please install close to the input terminal side of the VFD.

Output filter: Control the interference from the output side of the VFD, please install close to the output terminals of the VFD.



Braking resistor

Auxiliary equipment for braking system, shorten the deceleration time.



Membrane of heat releasing holes at the side

Apply to severe environment and improve protective effect.

Derate 10% of the machine.



Your Trusted Industry Automation Solution Provider

@invtelectric

E-mail:overseas@invt.com.cn Website:www.invt.com

SHENZHEN INVT ELECTRIC CO.,LTD. INVT Guangming Technology Building, Songbai Road, Matian, Guangming District, Shenzhen, China

Industrial Automation:
- HMI
- PLC
- VFD
- Servo System
- Elevator Intelligent Control System
- Rail Transit Traction System

Electric Power:
- UPS
- DCIM
- Solar Inverter
- New Energy Vehicle Powertrain System
- New Energy Vehicle Charging System
- New Energy Vehicle Motor

INVT Copyright.
Information may be subject to change without notice during product improving.

66003-00138 202511(V1.1)