www.electroshaili.com Electro Shaili الکتروشایلی

The right choice for the ultimate yield!

LS ELECTRIC strives to maximize your profits in gratitude for choosing us as your partner.

AC Variable Speed Drive

LSLV-S100 series

User's Manual

0.4-75kW [200V,400V]

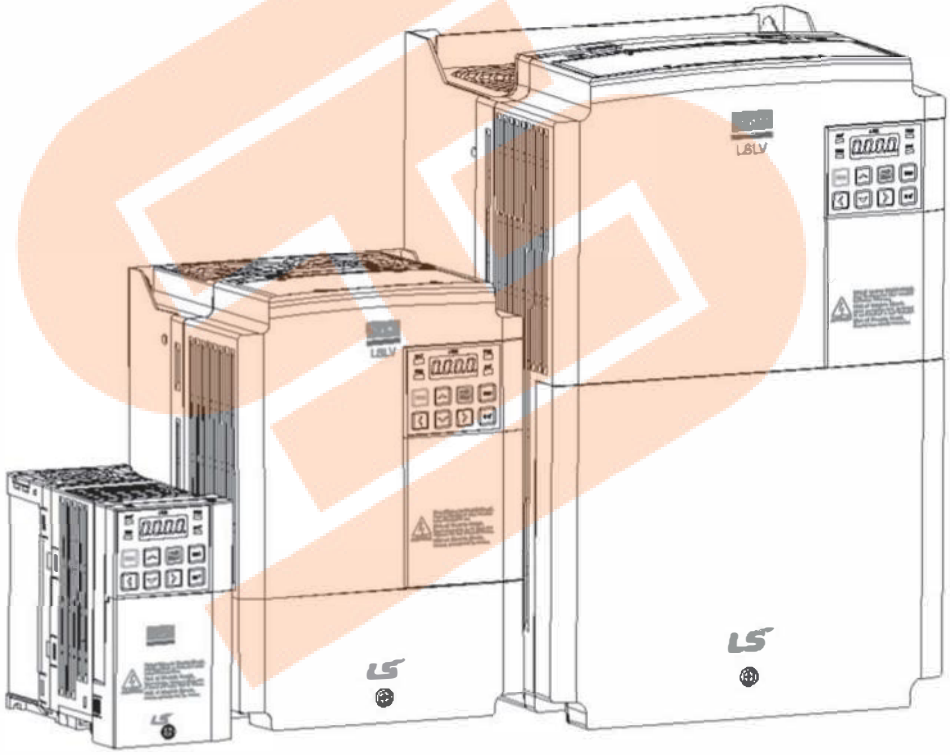

Safety Instructions

- Read this manual carefully before installing, wiring, operating, servicing or inspecting this equipment.
- Keep this manual within easy reach for quick reference.

LS ELECTRIC

www.electroshaili.ir ۰۲۱-۶۶۳۴۴۷۱۴ ۰۹۱۲-۶۳۹۸۹۶۱ ۰۹۱۰-۷۲۴۹۰۷۴ ۰۲۱-۶۶۱۷۰۰۶۲-۵ ۰۲۱-۹۲۰۰۶۶۱۷ (ده خط)

This operation manual is intended for users with basic knowledge of electricity and electric devices.
* LSLV-S100 is the official name for S100.

Safety Information

Read and follow all safety instructions in this manual precisely to avoid unsafe operating conditions, property damage, personal injury, or death.

Safety symbols in this manual

⚠ Danger

Indicates an imminently hazardous situation which, if not avoided, will result in severe injury or death.

⚠ Warning

Indicates a potentially hazardous situation which, if not avoided, could result in injury or death.

⚠ Caution

Indicates a potentially hazardous situation that, if not avoided, could result in minor injury or property damage.

Safety information

⚠ Danger

- Do not open the cover of the equipment while it is on or operating. Likewise, do not operate the inverter while the cover is open. Exposure of high voltage terminals or charging area to the external environment may result in an electric shock. Do not remove any covers or touch the internal circuit boards (PCBs) or electrical contacts on the product when the power is on or during operation. Doing so may result in serious injury, death, or serious property damage.
- Do not open the cover of the equipment even when the power supply to the inverter has been turned off unless it is necessary for maintenance or regular inspection. Opening the cover may result in an electric shock even when the power supply is off.
- The equipment may hold charge long after the power supply has been turned off. Use a multi-meter to make sure that there is no voltage before working on the inverter, motor or motor cable.

⚠ Warning

- This equipment must be grounded for safe and proper operation.
- Do not supply power to a faulty inverter. If you find that the inverter is faulty, disconnect the power supply and have the inverter professionally repaired.
- The inverter becomes hot during operation. Avoid touching the inverter until it has cooled to avoid burns.
- Do not allow foreign objects, such as screws, metal chips, debris, water, or oil to get inside the inverter. Allowing foreign objects inside the inverter may cause the inverter to malfunction or result in a fire.
- Do not operate the inverter with wet hands. Doing so may result in electric shock.
- Check the information about the protection level for the circuits and devices.

  The following connection terminals and devices are the Protective Class 0. It means that the circuit protection level depends on the basic insulation. If there is no basic insulation is failed, it may cause electric shock accident. When installing or wiring the connection terminals and devices, take the same protective action as with the power wire.

  - Multi-function Input: P1-P7, CM
  - Analog Frequency Input: VR, V1, I2, TI
  - Safety Function: SA, SB, SC
  - Analog Output: AO, AO1, AO2, TO
  - Digital Output: Q1, EG, 24, A1, B1, C1, A2, C2
  - Communication: S+/ S-/ SG
  - Fan

- The protection level of this equipment (inverter) is the Electrical ProtectiveClass I.

⚠ Caution

- Do not modify the interior workings of the inverter. Doing so will void the warranty.
- The inverter is designed for 3-phase motor operation. Do not use the inverter to operate a single phase motor.
- Do not place heavy objects on top of electric cables. Doing so may damage the cable and result in an electric shock.

Note

Maximum allowed prospective short-circuit current at the input power connection is defined in IEC 60439-1 as 100 kA. Depending on the selected MCCB, the LSLV-S100 Series is suitable for use in circuits capable of delivering a maximum of 100 kA RMS symmetrical amperes at the drive's maximum rated voltage. The following table shows the recommended MCCB for RMS symmetrical amperes.

Remarque

Le courant maximum de court-circuit présumé autorisé au connecteur d'alimentation électrique est défini dans la norme IEC 60439-1 comme égal à 100 kA. Selon le MCCB sélectionné, la série LSLV-S100 peut être utilisée sur des circuits pouvant fournir un courant RMS symétrique de 100 kA maximum en ampères à la tension nominale maximale du variateur. Le tableau suivant indique le MCCB recommandé selon le courant RMS symétrique en ampères.

Working Voltage	UTE100(E/N)	UTS150(N/H/L)	ABS33c	ABS53c	ABS63c	ABS103c
240V(50/60Hz)	50/65 kA	65/100/150 kA	30 kA	35 kA	35 kA	85 kA
480V(50/60Hz)	25/35 kA	35/65/100 kA	7.5 kA	10 kA	10 kA	26 kA

Working Voltage	UTS150 (N/H/L)	UTS250 (N/H/L)	UTS400 (N/H/L)	ABS103c	ABS203c	ABS403c
480V(50/60Hz)	35/65/100kA	35/65/100kA	35/65/100kA	26kA	26kA	35kA

Quick Reference Table

The following table contains situations frequently encountered by users while working with inverters. Refer to the typical and practical situations in the table to quickly and easily locate answers to your questions.

Situation	Reference
I want to run a slightly higher rated motor than the inverter's rated capacity.	p. 253
I want to configure the inverter to start operating as soon as the power source is applied.	p. 123
I want to configure the motor's parameters.	p.185
I want to set up sensorless vector control.	p.189
Something seems to be wrong with the inverter or the motor.	p. 274, p.393
What is auto tuning?	p.185
What are the recommended wiring lengths?	p. 274, p.393
The motor is too noisy.	p. 218
I want to apply PID control on my system.	p. 177
What are the factory default settingss for P1-P7 multi-function terminals?	p. 40
I want to view all of the parameters I have modified.	p. 228
I want to review recent fault trip and warning histories.	p. 357
I want to change the inverter's operation frequency using a potentiometer.	p. 87
I want to install a frequency meter using an analog terminal.	p. 42
I want to display the supply current to motor.	p. 90
I want to operate the inverter using a multi-step speed configuration.	p. 115
The motor runs too hot.	p. 252
The inverter is too hot.	p. 265
The cooling fan does not work.	p. 398
I want to change the items that are monitored on the keypad.	p. 248

Table of Contents

1 Preparing the Installation 1

1.1 Product Identification 1

1.2 Part Names 3

1.2.1 0.4-22kW Models 3

1.2.2 30-75kW Models 5

1.2.3 IP66 Models 6

1.3 Installation Considerations 8

1.4 Selecting and Preparing a Site for Installation 9

1.5 Cable Selection 12

2 Installing the Inverter 14

2.1 Mounting the Inverter 16

2.2 Cable Wiring 19

2.3 Post-Installation Checklist 53

2.4 Test Run 55

3 Learning to Perform Basic Operations 57

3.1 About the Keypad 57

3.1.1 0.4-22kW Models 57

3.1.2 30-75kW Models 58

3.1.3 About the Display 58

3.1.4 Operation Keys 62

3.1.5 Control Menu 64

3.2 Learning to Use the Keypad 66

3.2.1 Display Mode Selection (30-75kW models only) 66

3.2.2 Group and Code Selection 70

3.2.3 Navigating Directly to Different Codes 75

3.2.4 Setting Parameter Values 77

3.2.5 Configuring the [ESC] Key (0.4-22kW models only) 80

3.3 Actual Application Examples 81

3.3.1 Acceleration Time Configuration (0.4-22kW models only) 81

3.3.2 Frequency Reference Configuration (0.4-22kW models only) 82

3.3.3 Jog Frequency Configuration (0.4-22kW models only) 83

3.3.4 Initializing All Parameters 84
3.3.5 Frequency Setting (Keypad) and Operation (via Terminal Input) 85
3.3.6 Frequency Setting (Potentiometer) and Operation (Terminal Input) 87
3.3.7 Frequency Setting (Potentiometer) and Operation (Keypad) 88
3.4 Monitoring the Operation 90
3.4.1 0.4-22kW Models 90
3.4.2 30-75kW Models 93

4 Learning Basic Features 99

4.1 Setting Frequency Reference 102
4.1.1 Keypad as the Source (KeyPad-1 setting) 102
4.1.2 Keypad as the Source (KeyPad-2 setting) 103
4.1.3 V1 Terminal as the Source 103
4.1.4 Setting a Frequency Reference with Input Voltage (Terminal I2) 110
4.1.5 Setting a Frequency with TI Pulse Input 111
4.1.6 Setting a Frequency Reference via RS-485 Communication 113
4.2 Frequency Hold by Analog Input 114
4.3 Changing the Displayed Units (Hz↔Rpm) 115
4.4 Setting Multi-step Frequency 115
4.5 Command Source Configuration 117
4.5.1 The Keypad as a Command Input Device 117
4.5.2 Terminal Block as a Command Input Device (Fwd/Rev Run Commands) 118
4.5.3 Terminal Block as a Command Input Device (Run and Rotation Direction Commands) 119
4.5.4 RS-485 Communication as a Command Input Device 120
4.6 Local/Remote Mode Switching 120
4.7 Forward or Reverse Run Prevention 122
4.8 Power-on Run 123
4.9 Reset and Restart 124
4.10 Setting Acceleration and Deceleration Times 125
4.10.1 Acc/Dec Time Based on Maximum Frequency 125

4.10.2 Acc/Dec Time Based on Operation Frequency 126
4.10.3 Multi-step Acc/Dec Time Configuration 127
4.10.4 Configuring Acc/Dec Time Switch Frequency 129
4.11 Acc/Dec Pattern Configuration 130
4.12 Stopping the Acc/Dec Operation 132
4.13 V/F(Voltage/Frequency) Control 132
4.13.1 Linear V/F Pattern Operation 132
4.13.2 Square Reduction V/F pattern Operation 133
4.13.3 User V/F Pattern Operation 134
4.14 Torque Boost 135
4.14.1 Manual Torque Boost 135
4.14.2 Auto Torque Boost-1 136
4.14.3 Auto Torque Boost-2 136
4.15 Output Voltage Setting 137
4.16 Start Mode Setting 138
4.16.1 Acceleration Start 138
4.16.2 Start After DC Braking 138
4.17 Stop Mode Setting 139
4.17.1 Deceleration Stop 139
4.17.2 Stop After DC Braking 139
4.17.3 Free Run Stop 140
4.17.4 Power Braking 141
4.18 Frequency Limit 142
4.18.1 Frequency Limit Using Maximum Frequency and Start Frequency 142
4.18.2 Frequency Limit Using Upper and Lower Limit Frequency Values 142
4.18.3 Frequency Jump 143
4.19 2nd Operation Mode Setting 144
4.20 Multi-function Input Terminal Control 145
4.21 Multi-keypad Setting 147
4.22 User Sequence Setting 148
4.23 Fire Mode Operation 155
4.24 Improvement of output voltage drop 157

5 Learning Advanced Features 160

5.1 Operating with Auxiliary References 162
5.2 Jog operation 166
5.2.1 Jog Operation 1-Forward Jog by Multi-function Terminal 166
5.2.2 Jog Operation 2-Fwd/Rev Jog by Multi-function Terminal 168
5.2.3 Jog Operation by Keypad 168
5.3 Up-down Operation 169
5.4 3-Wire Operation 172
5.5 Safe Operation Mode 172
5.6 Dwell Operation 174
5.7 Slip Compensation Operation 176
5.8 PID Control 177
5.8.1 PID Basic Operation 178
5.8.2 Pre-PID Operation 183
5.8.3 PID Operation Sleep Mode 184
5.8.4 PID Switching (PID Openloop) 185
5.9 Auto Tuning 185
5.10 Sensorless Vector Control for Induction Motors 189
5.10.1 Sensorless Vector Control Operation Setting for Induction Motors 191
5.10.2 Sensorless Vector Control Operation Guide for Induction Motors 195
5.11 Sensorless Vector Control for PM (Permanent-Magnet) Synchronous Motors 196
5.11.1 Detecting the Initial Pole Position 198
5.11.2 Sensorless Vector Control Mode Settings for PM Synchronous Motors 199
5.11.3 Guidelines for Running a PM Synchronous Motor in Sensorless Vector Control Mode 203
5.12 Kinetic Energy Buffering Operation 206
5.13 Torque Control 209
5.14 Energy Saving Operation 212
5.14.1 Manual Energy Saving Operation 212
5.14.2 Automatic Energy Saving Operation 212
5.15 Speed Search Operation 213

5.16 Auto Restart Settings 217
5.17 Operational Noise Settings (carrier frequency settings) 218
5.18 2nd Motor Operation 220
5.19 Supply Power Transition 221
5.20 Cooling Fan Control 222
5.21 Input Power Frequency and Voltage Settings 223
5.22 Read, Write, and Save Parameters 223
5.23 Parameter Initialization 224
5.24 Parameter View Lock 226
5.25 Parameter Lock 227
5.26 Changed Parameter Display 228
5.27 User Group 229
5.28 Easy Start On 230
5.29 Config(CNF) Mode 231
5.30 Timer Settings 232
5.31 Brake Control 233
5.32 Multi-Function Output On/Off Control 234
5.33 Press Regeneration Prevention 235
5.34 Analog Output 236
5.34.1 Voltage and Current Analog Output 236
5.34.2 Analog Pulse Output 239
5.35 Digital Output 242
5.35.1 Multi-function Output Terminal and Relay Settings 242
5.35.2 Fault Trip Output using Multi-Function Output Terminal and Relay 246
5.35.3 Multi-function Output Terminal Delay Time Settings 247
5.36 Keypad Language Settings 248
5.37 Operation State Monitor 248
5.38 Operation Time Monitor 251

6 Learning Protection Features 252

6.1 Motor Protection 252
6.1.1 Electronic Thermal Motor Overheating Prevention (ETH) 252
6.1.2 Motor Overheat Sensor Input 253

6.1.3 Overload Early Warning and Trip....256
6.1.4 Stall Prevention and Flux Braking....258
6.2 Inverter and Sequence Protection....263
6.2.1 Open-phase Protection....263
6.2.2 External Trip Signal....264
6.2.3 Inverter Overload Protection....265
6.2.4 Speed Command Loss....265
6.2.5 Dynamic Brake (DB) Resistor Configuration....267
6.3 Under load Fault Trip and Warning....269
6.3.1 Fan Fault Detection....270
6.3.2 Lifetime diagnosis of components....271
6.3.3 Low Voltage Fault Trip....271
6.3.4 Output Block by Multi-Function Terminal....272
6.3.5 Trip Status Reset....272
6.3.6 Inverter Diagnosis State....273
6.3.7 Operation Mode on Option Card Trip....273
6.3.8 No Motor Trip....274
6.3.9 Low voltage trip 2....274
6.4 Fault/Warning List....275

7 RS-485 Communication Features....277

7.1 Communication Standards....277
7.2 Communication System Configuration....278
7.2.1 Communication Line Connection....278
7.2.2 Setting Communication Parameters....279
7.2.3 Setting Operation Command and Frequency....280
7.2.4 Command Loss Protective Operation....281
7.2.5 Setting Virtual Multi-Function Input....281
7.2.6 Saving Parameters Defined by Communication....282
7.2.7 Total Memory Map for Communication....282
7.2.8 Parameter Group for Data Transmission....283
7.3 Communication Protocol....284
7.3.1 LS INV 485 Protocol....284
7.3.2 Modbus-RTU Protocol....290
7.4 Compatible Common Area Parameter....293

7.5 S100 Expansion Common Area Parameter 296
7.5.1 Monitoring Area Parameter (Read Only) 296
7.5.2 Control Area Parameter (Read/ Write) 301
7.5.3 Inverter Memory Control Area Parameter (Read and Write) 303

8 Table of Functions 307
8.1 Operation Group 307
8.2 Drive group (PAR→dr) 308
8.3 Basic Function group (PAR→bA) 314
8.4 Expanded Function group (PAR→Ad) 319
8.5 Control Function group (PAR→Cn) 325
8.6 Input Terminal Block Function group (PAR→In) 334
8.7 Output Terminal Block Function group (PAR→OU) 339
8.8 Communication Function group (PAR→CM) 344
8.9 Application Function group (PAR→AP) 349
8.10 Protection Function group (PAR→Pr) 352
8.11 2nd Motor Function group (PAR→M2) 357
8.12 User Sequence group (US) 360
8.13 User Sequence Function group(UF) 362
8.14 Groups for LCD Keypad Only 384
8.14.1 Trip Mode (TRP Last-x) 384
8.14.2 Config Mode (CNF) 384

9 Troubleshooting 389
9.1 Trips and Warnings 389
9.1.1 Fault Trips 389
9.1.2 Warning Messages 392
9.2 Troubleshooting Fault Trips 393
9.3 Troubleshooting Other Faults 395

10 Maintenance 399
10.1 Regular Inspection Lists 399
10.1.1 Daily Inspections 399
10.1.2 Annual Inspections 400
10.1.3 Bi-annual Inspections 402

10.2 Replacing Major Components 403
10.2.1 Exchange Cycle for Major Components 403
10.3 Storage and Disposal 403
10.3.1 Storage 403
10.3.2 Disposal 404
11 Technical Specification 405
11.1 Input and Output Specification 405
11.1.1 0.4-22kW Models 405
11.1.2 30-75kW Models 411
11.2 Product Specification Details 412
11.3 External Dimensions 415
11.3.1 0.4-22kW Models 415
11.3.2 30-75kW Models 422
11.3.3 IP66 Models 424
11.4 Peripheral Devices 432
11.4.1 0.4-22kW Models 432
11.4.2 30-75kW Models 433
11.5 Fuse and Reactor Specifications 433
11.5.1 0.4-22kW Models 434
11.5.2 30-75kW Models 435
11.6 Terminal Screw Specification 435
11.6.1 Input/Output Terminal Screw Specification 435
11.6.2 Control Circuit Terminal Screw Specification 437
11.7 Dynamic Braking Unit(DBU) and Resistors 438
11.7.1 Brake Resistor Specification (0.4-22kW) 438
11.7.2 Dynamic Braking Unit (30-75kW) 439
11.7.3 Terminal arrangement 439
11.7.4 Dynamic Braking Unit Dimensions 441
11.7.5 Display Functions 443
11.7.6 Dynamic Braking Unit Resistors 443
11.8 Continuous Rated Current Derating 444
11.9 Heat Emmission 447
11.10 Remote Option 448

12 Applying Drives to Single-Phase Input Application 449
12.1 Introduction 449
12.2 Power(HP), Input Current and Output Current 450
12.3 Input Frequency and Voltage Tolerance 451
13 Safety Function STO(Safe Torque Off) 452
13.1 Safety Standard Product 452
13.2 About the Safety Function 452
13.3 Safety Function Wiring Diagram 453
13.4 Safety Function Terminal Description 453
Product Warranty 454
Index 462

1 Preparing the Installation

This chapter provides details on product identification, part names, correct installation and cable specifications. To install the inverter correctly and safely, carefully read and follow the instructions.

1.1 Product Identification

The S100 Inverter is manufactured in a range of product groups based on drive capacity and power source specifications. Product name and specifications are detailed on the rating plate. The illustration on the next page shows the location of the rating plate. Check the rating plate before installing the product and make sure that the product meets your requirements. For more detailed product specifications, refer to *11.1 Input and Output Specification* on page *405*.

Note

Check the product name, open the packaging, and then confirm that the product is free from defects. Contact your supplier if you have any issues or questions about your product.

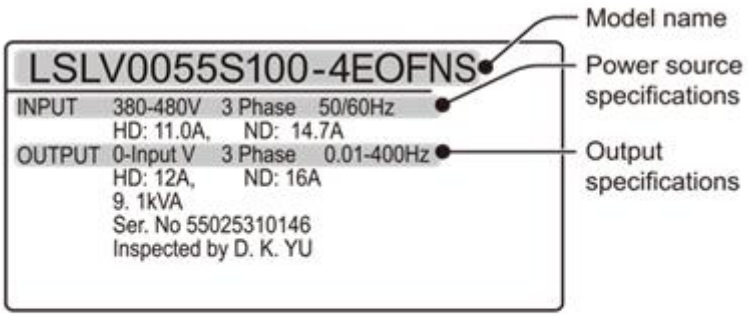

LSLV 0055 S100 - 4EOFNS

Motor capacity

0004 - 0.4KW	0150 - 15KW
0008 - 0.75KW	0185 - 18.5KW
0015 - 1.5KW	0220 - 22KW
0022 - 2.2KW	0300 - 30KW
0037 - 3.7KW	0370 - 37KW
0040 - 4.0KW	0450 - 45KW
0055 - 5.5KW	0550 - 55KW
0075 - 7.5KW	0750 - 75KW
0110 - 11KW	

Series name

Input voltage

1 - Single phase 200V
2 - 3-phase 200V
4 - 3-phase 400V

Keypad

E - LED Keypad
C - LCD Keypad

UL Type

O - UL Open Type
X - IP66

EMC filter

N - Non-EMC
F - Built-in EMC

Reactor

N - Non-Reactor
D - Built-in DCL

I/O

M - 3.5mm
S - 5mm

1.2 Part Names

The illustration below displays part names. Details may vary between product groups.

1.2.1 0.4-22kW Models

0.4-2.2kW (Single Phase) and 0.4-4.0kW (3–Phase)

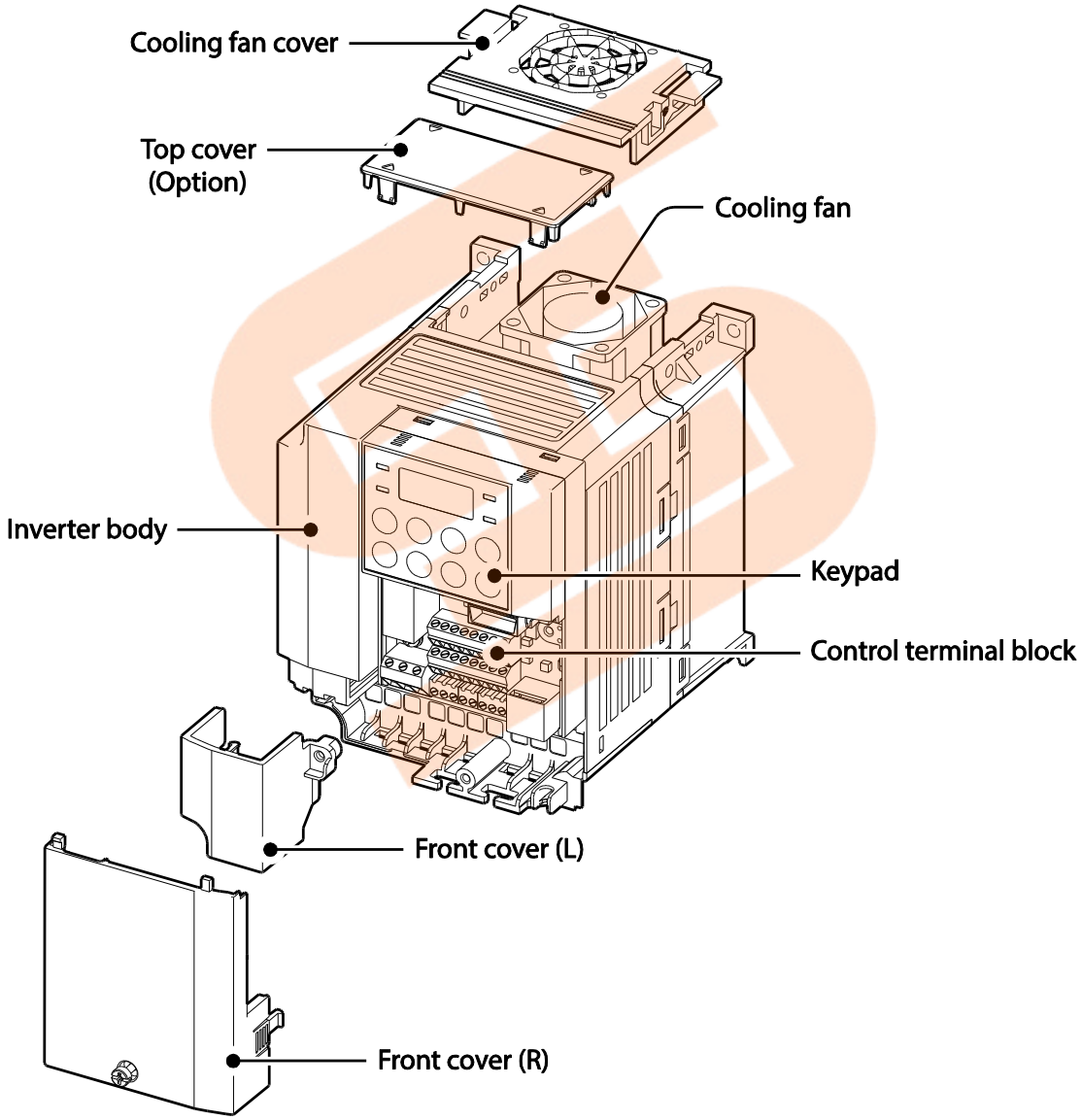

5.5-22kW(3–Phase)

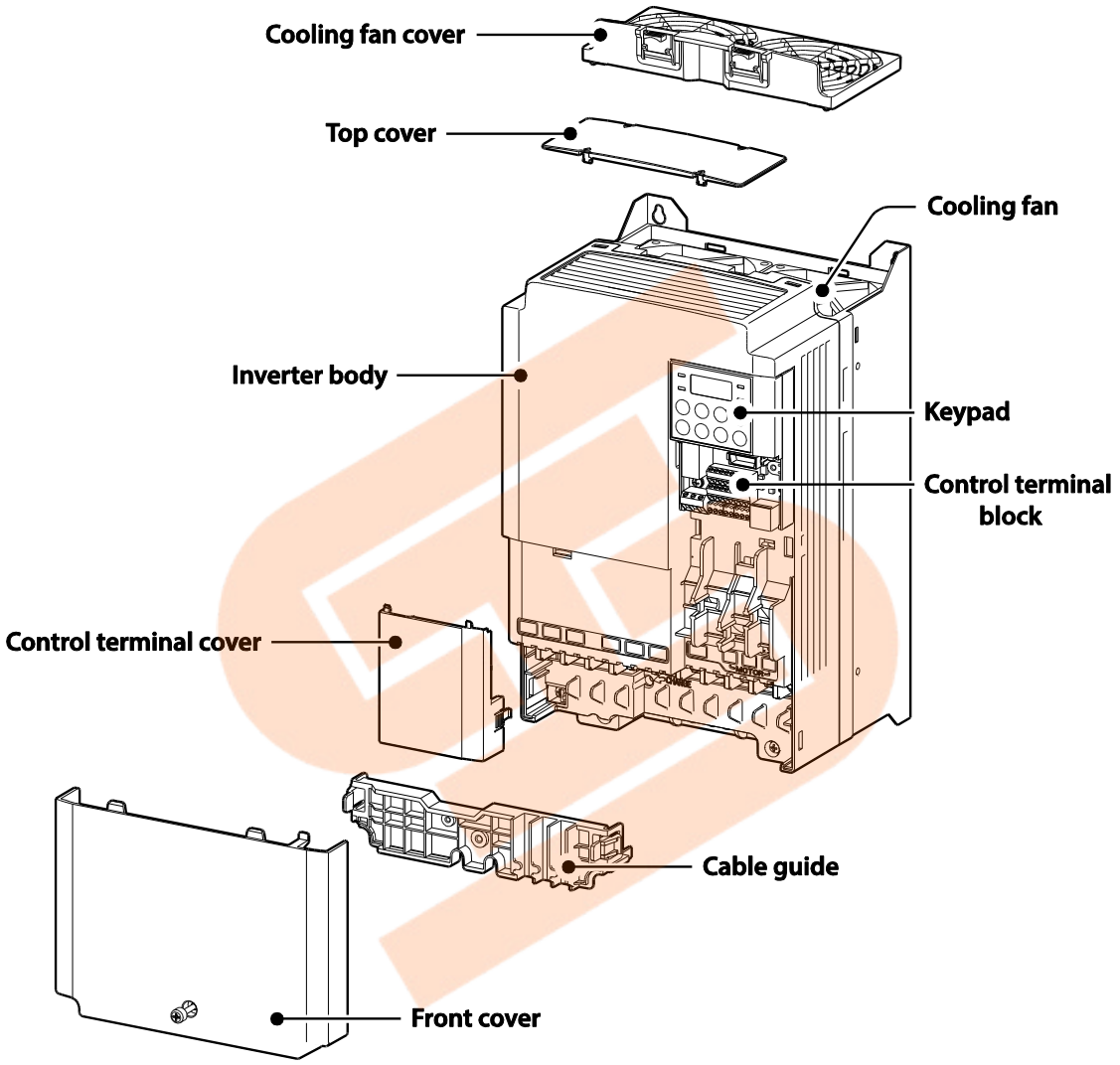

1.2.2 30-75kW Models

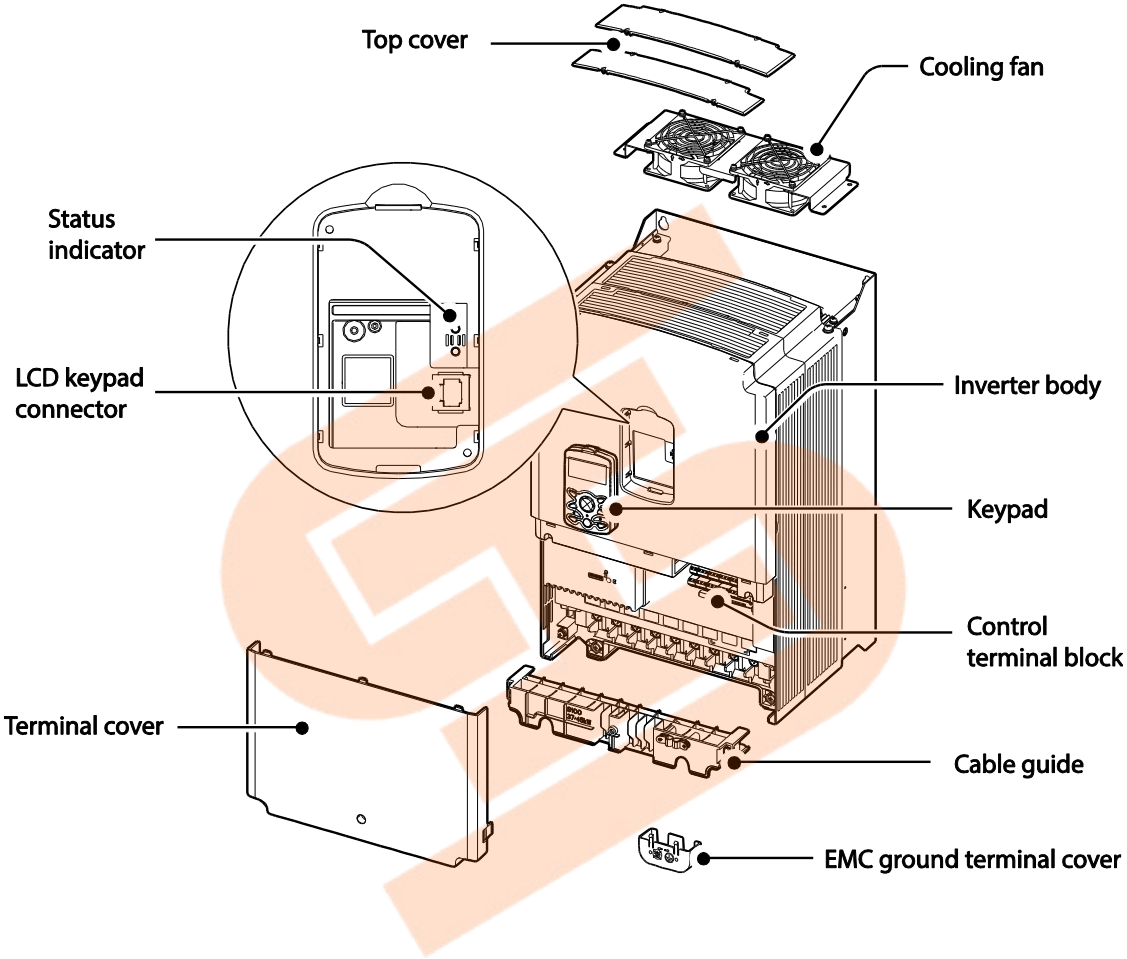

Note

The grounding terminal cover of EMC is not existed in the 55-75kW inverters.

1.2.3 IP66 Models

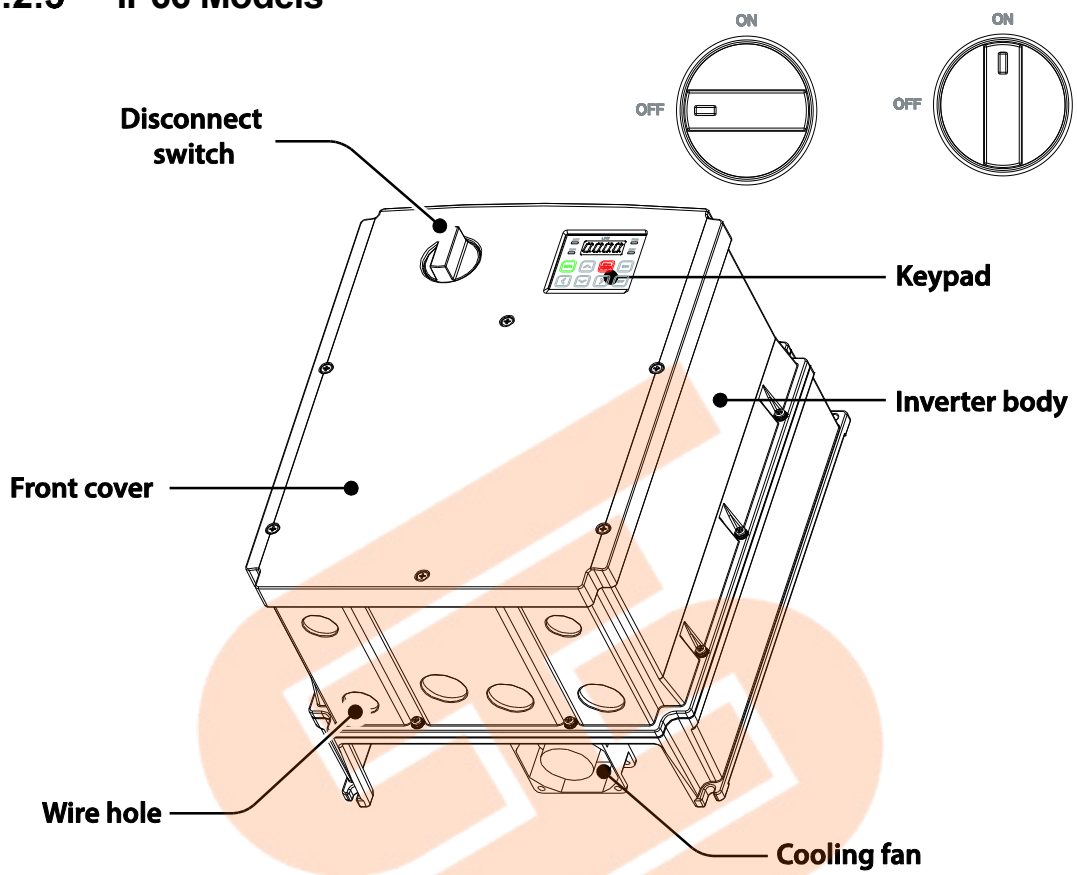

Do not operate Disconnect Switch when motor is operating.

The installation location for cooling fan varies according to product capacity.
Inside the product: 0.4-4.0kW; bottom of the product: 5.5-7.5kW; inside and top of the product: 11-22kW.
The NP (Non-PDS) type does not have the Disconnect Switch. For example, the S100 5.5kW with built-in filter and without Disconnect Switch: LSLV0055S100-4EXFNS (Non PDS).

Front cover removed

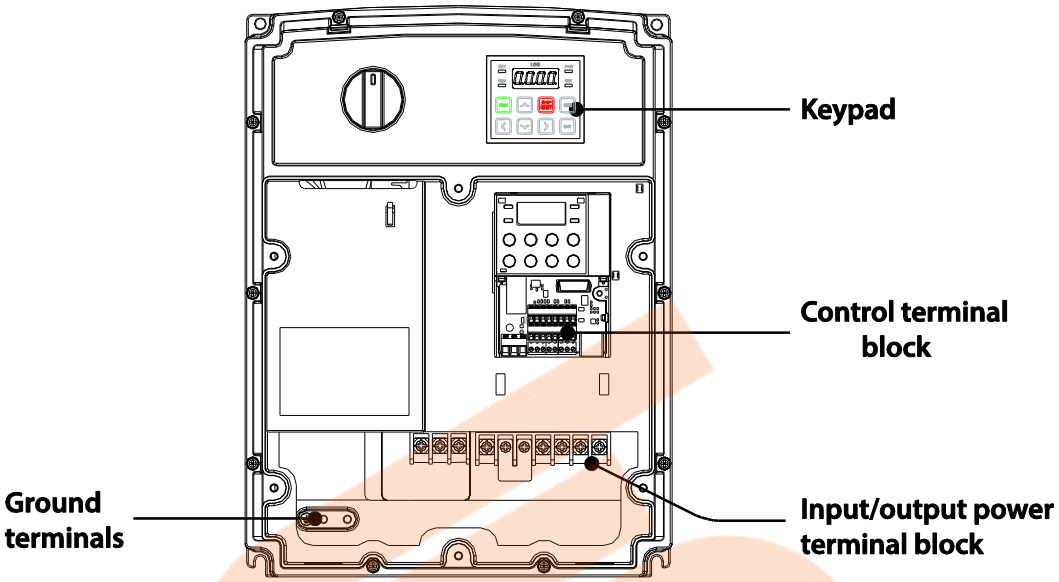

1.3 Installation Considerations

Inverters are composed of various precision, electronic devices, and therefore the installation environment can significantly impact the lifespan and reliability of the product. The table below details the ideal operation and installation conditions for the inverter.

Items	Description
Ambient Temperature*	Heavy Duty: 14–104°F (-10–50℃) Normal Duty: 14–122°F (-10– 40℃)
Ambient Humidity	90% relative humidity (no condensation)
Storage Temperature	- 4–149°F (-20–65℃)
Environmental Factors	An environment free from corrosive or flammable gases, oil residue or dust
Altitude / Vibration	Maximum 1000m above sea level for standard operation. From 1000 to 4000m, the rated input voltage and rated output current of the drive must be derated by 1% for every 100m. / less than 1G (9.8m/sec^2)
Air Pressure	70 –106kPa

* The ambient temperature is the temperature measured at a point 2” (5 cm) from the surface of the inverter.
* IP66 models only support heavy load operation, and an ambient temperature of between -10℃ – +40℃.

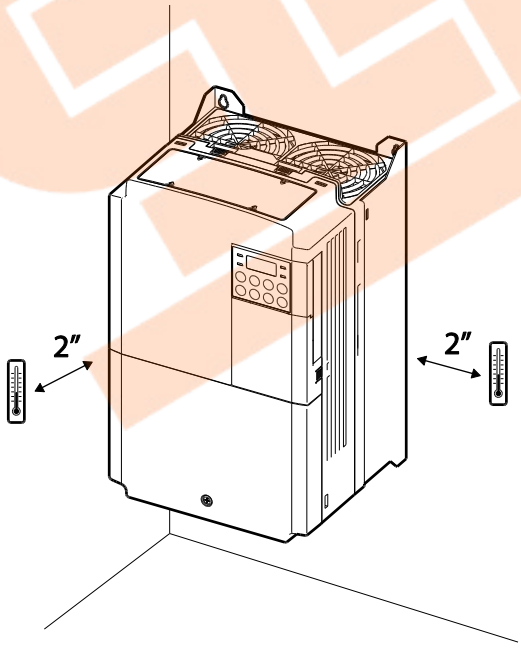

Caution

Do not allow the ambient temperature to exceed the allowable range while operating the inverter.

1.4 Selecting and Preparing a Site for Installation

When selecting an installation location consider the following points:

- The location must be free from vibration, and the inverter must be installed on a wall that can support the inverter's weight.
- The inverter can become very hot during operation. Install the inverter on a surface that is fire-resistant or flame-retardant and with sufficient clearance around the inverter to allow air to circulate. The illustrations below detail the required installation clearances.

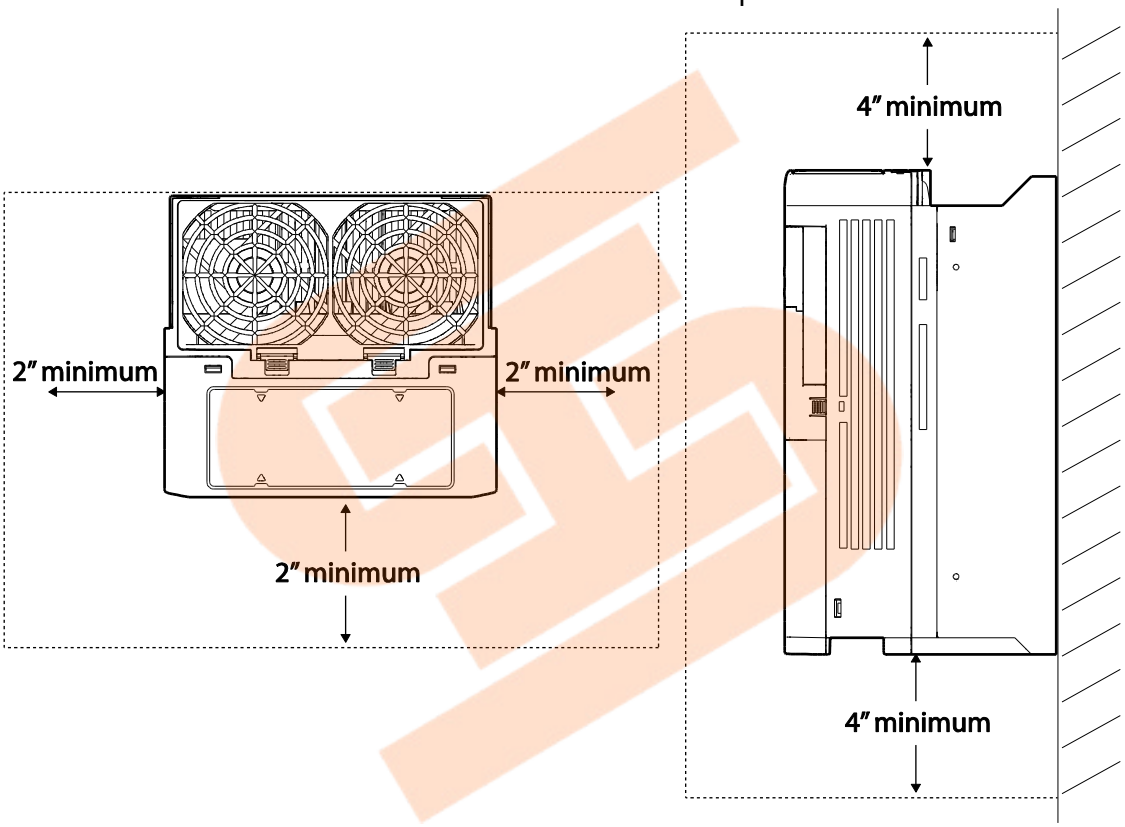

- Ensure sufficient air circulation is provided around the inverter when it is installed. If the inverter is to be installed inside a panel, enclosure, or cabinet rack, carefully consider the position of the inverter's cooling fan and the ventilation louver. The cooling fan must be positioned to efficiently transfer the heat generated by the operation of the inverter.

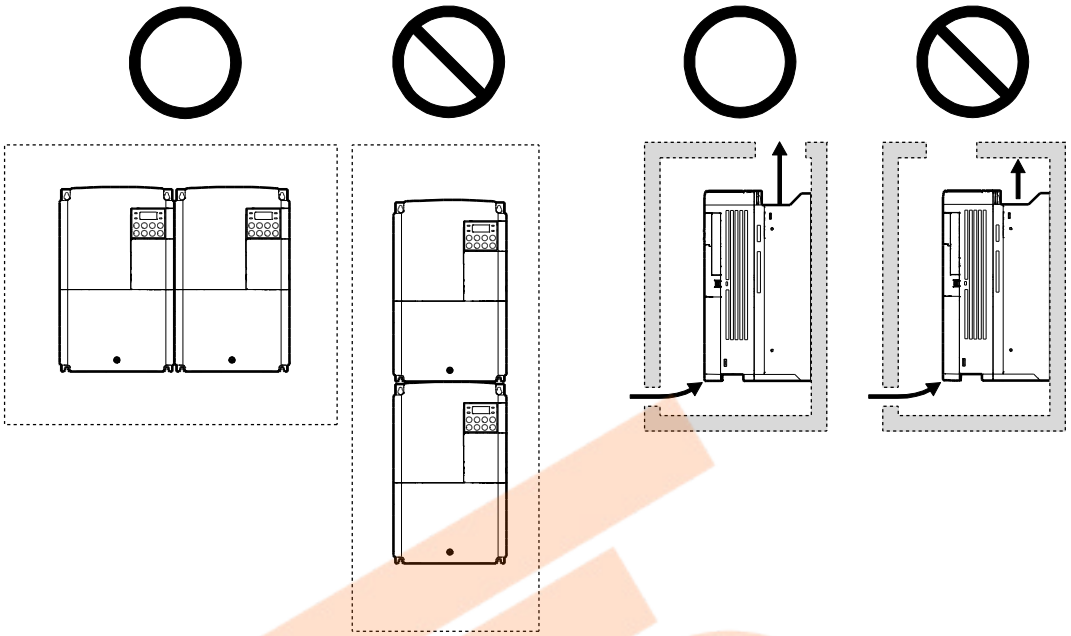

- If you are installing multiple inverters in one location, arrange them side-by-side and remove the top covers. The top covers MUST be removed for side-by-side installations. Use a flat head screwdriver to remove the top covers.
- Side-by-side operation only supports 0.4-22kW, IP20 models.

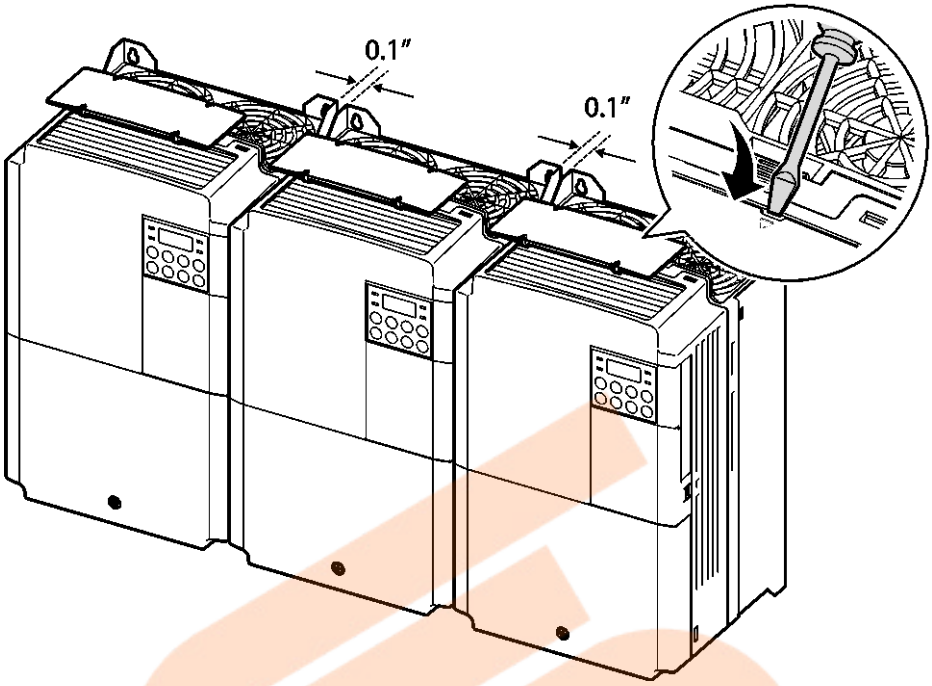

- If you are installing multiple inverters, of different ratings, provide sufficient clearance to meet the clearance specifications of the larger inverter.

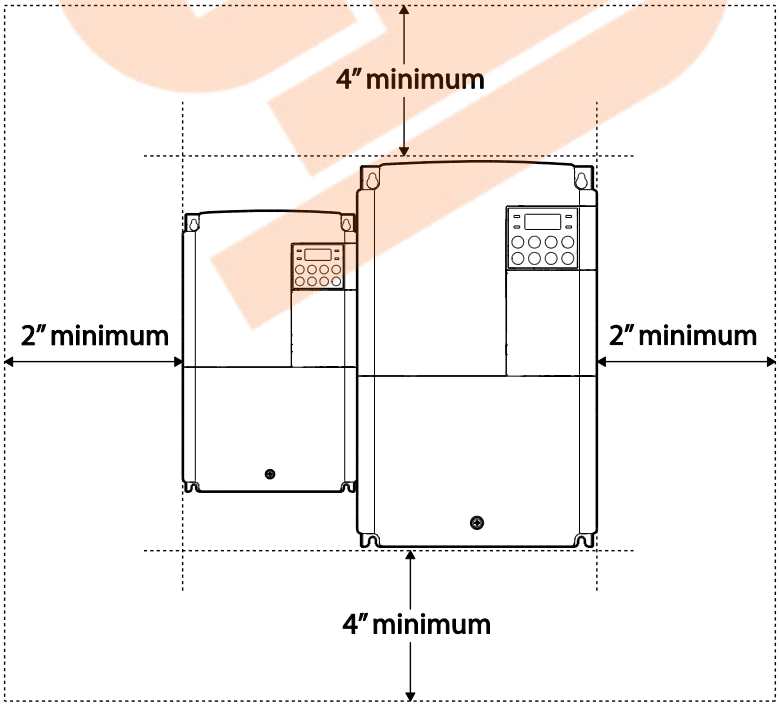

1.5 Cable Selection

When you install power and signal cables in the terminal blocks, only use cables that meet the required specification for the safe and reliable operation of the product. Refer to the following information to assist you with cable selection.

Caution

- Wherever possible use cables with the largest cross-sectional area for mains power wiring, to ensure that voltage drop does not exceed 2%.
- Use copper cables rated for 600V, 75℃ for power terminal wiring.
- Use copper cables rated for 300V, 75℃ for control terminal wiring.

Ground Cable and Power Cable Specifications (0.4-22kW)

Load (kW)		Ground		Power I/O			
		mm²	AWG	mm²		AWG	
				R/S/T	U/V/W	R/S/T	U/V/W
Single Phase 200V	0.4	4	12	2	2	14	14
	0.75						
	1.5						
	2.2			3.5	3.5	12	12
3–Phase 200V	0.4			2	2	14	14
	0.75						
	1.5						
	2.2						
	3.7			3.5	3.5	12	12
	4						
	5.5	6	10	6	6	10	10
	7.5						
	11	16	6	10	10	8	8
	15			16	16	6	6
3–Phase 400V	0.4	4	12	2	2	14	14
	0.75						
	1.5						
	2.2						
	3.7						
	4						
	5.5	4	12	2.5	2.5	14	14
	7.5			4	4	12	12
	11	10	8				
	15			6	6	10	10
	18.5	16	6	10	10	8	8
	22						

Ground Cable and Power Cable Specifications (30-75kW)

Load (kW)		Ground		Power I/O			
		mm²	AWG	mm²		AWG	
				R/S/T	U/V/W	R/S/T	U/V/W
3–Phase 400V	30	16	5	25	25	4	4
	37						
	45			70	70	1/0	1/0
	55	35	3				
	75		2				

Signal (Control) Cable Specifications

Terminals	Signal Cable			
	Without Crimp Terminal Connectors (Bare wire)		With Crimp Terminal Connectors (Bootlace Ferrule)	
	mm²	AWG	mm²	AWG
P1~P7*/CM/VR/V1/I2 /AO1,AO2/Q1/EG/24/TI/ TO* /SA,SB,SC/S+, S-,SG	0.75	18	0.5	20
A1/B1/C1/A2/C2	1.0	17	1.5	15

* Standard I/O doesn't support P6/P7/TI/TO terminal. Refer to *Step 4 Control Terminal Wiring* on page *36*.

2 Installing the Inverter

This chapter describes the physical and electrical installation methods, including mounting and wiring of the product. Refer to the flowchart and basic configuration diagram provided below to understand the procedures and installation methods to be followed to install the product correctly.

Installation Flowchart

The flowchart lists the sequence to be followed during installation. The steps cover equipment installation and testing of the product. More information on each step is referenced in the steps.

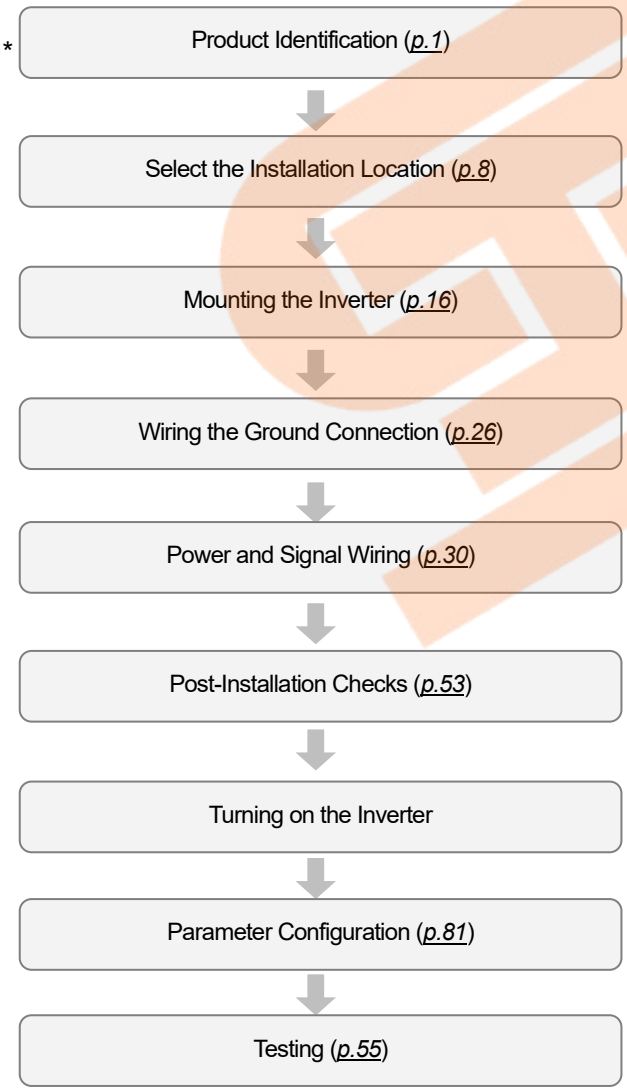

Basic Configuration Diagram

The reference diagram below shows a typical system configuration showing the inverter and peripheral devices.

Prior to installing the inverter, ensure that the product is suitable for the application (power rating, capacity, etc). Ensure that all of the required peripherals and optional devices (resistor brakes, contactors, noise filters, etc.) are available. For more details on peripheral devices, refer to *11.4 Peripheral Devices* on page *432*.

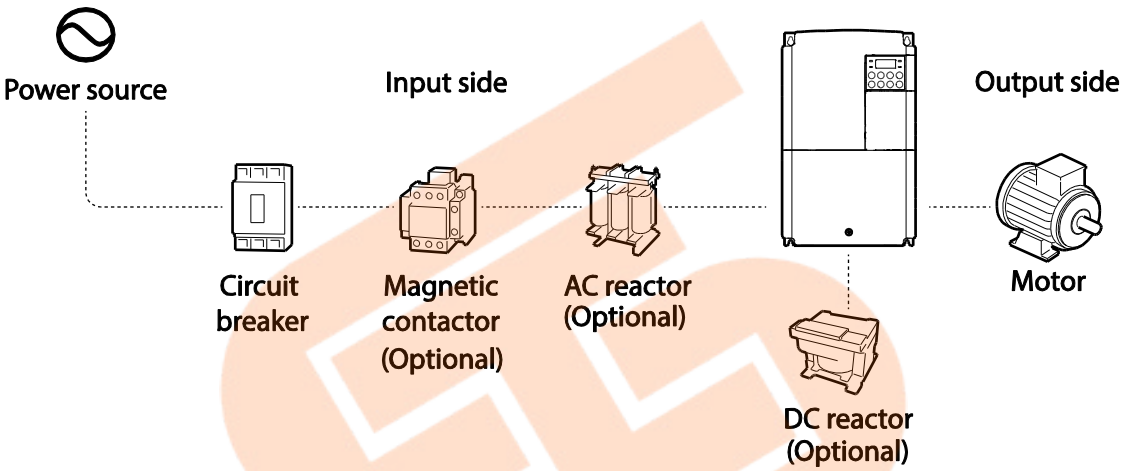

Caution

- Figures in this manual are shown with covers or circuit breakers removed to show a more detailed view of the installation arrangements. Install covers and circuit breakers before operating the inverter. Operate the product according to the instructions in this manual.
- Do not start or stop the inverter using a magnetic contactor, installed on the input power supply.
- If the inverter is damaged and loses control, the machine may cause a dangerous situation. Install an additional safety device such as an emergency brake to prevent these situations.
- High levels of current draw during power-on can affect the system. Ensure that correctly rated circuit breakers are installed to operate safely during power-on situations.
- Reactors can be installed to improve the power factor. Note that reactors may be installed within 30 ft (9.14 m) from the power source if the input power exceeds 10 times 0f inverter capacity. Refer to 11.5 *Fuse and Reactor Specifications* on page *433* and carefully select a reactor that meets the requirements.
- 30-75kW models have a built-in DC Reactor.

2.1 Mounting the Inverter

Mount the inverter on a wall or inside a panel following the procedures provided below. Before installation, ensure that there is sufficient space to meet the clearance specifications, and that there are no obstacles impeding the cooling fan's air flow.

Select a wall or panel suitable to support the installation. Refer to *11.3 External Dimensions* on page *415* and check the inverter's mounting bracket dimensions.

1 Use a level to draw a horizontal line on the mounting surface, and then carefully mark the fixing points.

2 Drill the two upper mounting bolt holes, and then install the mounting bolts. Do not fully tighten the bolts at this time. Fully tighten the mounting bolts after the inverter has been mounted.

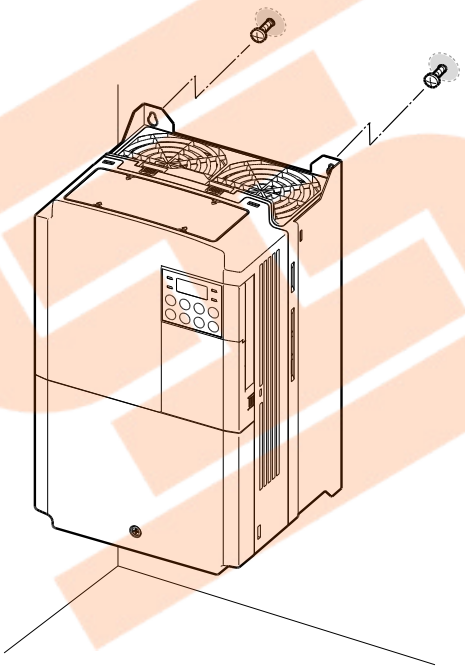

3 Mount the inverter on the wall or inside a panel using the two upper bolts, and then fully tighten the mounting bolts. Ensure that the inverter is placed flat on the mounting surface, and that the installation surface can securely support the weight of the inverter.

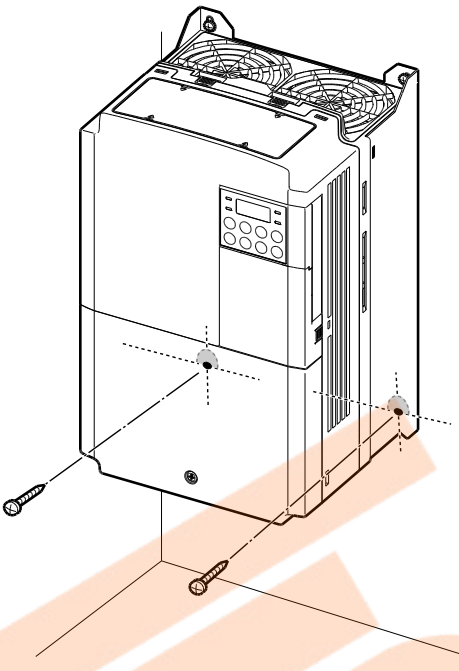

Note

The quantity and dimensions of the mounting brackets vary based on frame size. Refer to *11.3 External Dimensions* on page *415* for detailed information about your model.

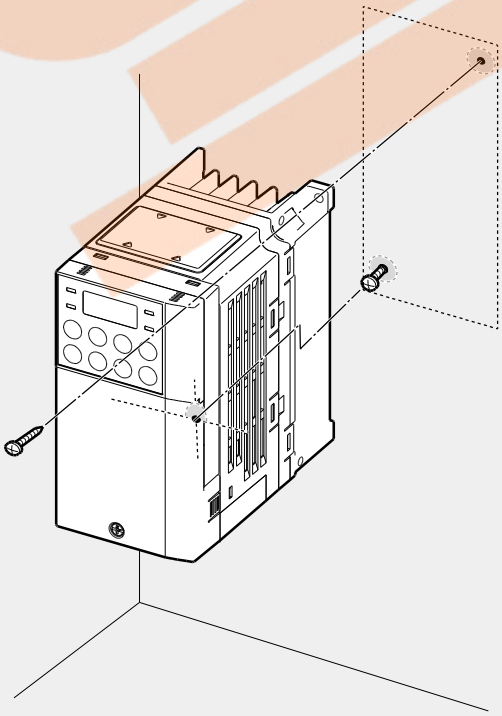

0.4kW (Single Phase) and 0.4-0.8kW (3-phase) inverters have only two mounting brackets.

Caution

- Do not transport the inverter by lifting with the inverter's covers or plastic surfaces. The inverter may tip over if covers break, causing injuries or damage to the product. Always support the inverter using the metal frames when moving it.
- High-capacity inverters are very heavy and bulky. Use an appropriate transport method that is suitable for the weight.
- Do not install the inverter on the floor or mount it sideways against a wall. The inverter MUST be installed vertically, on a wall or inside a panel, with its rear flat on the mounting surface.

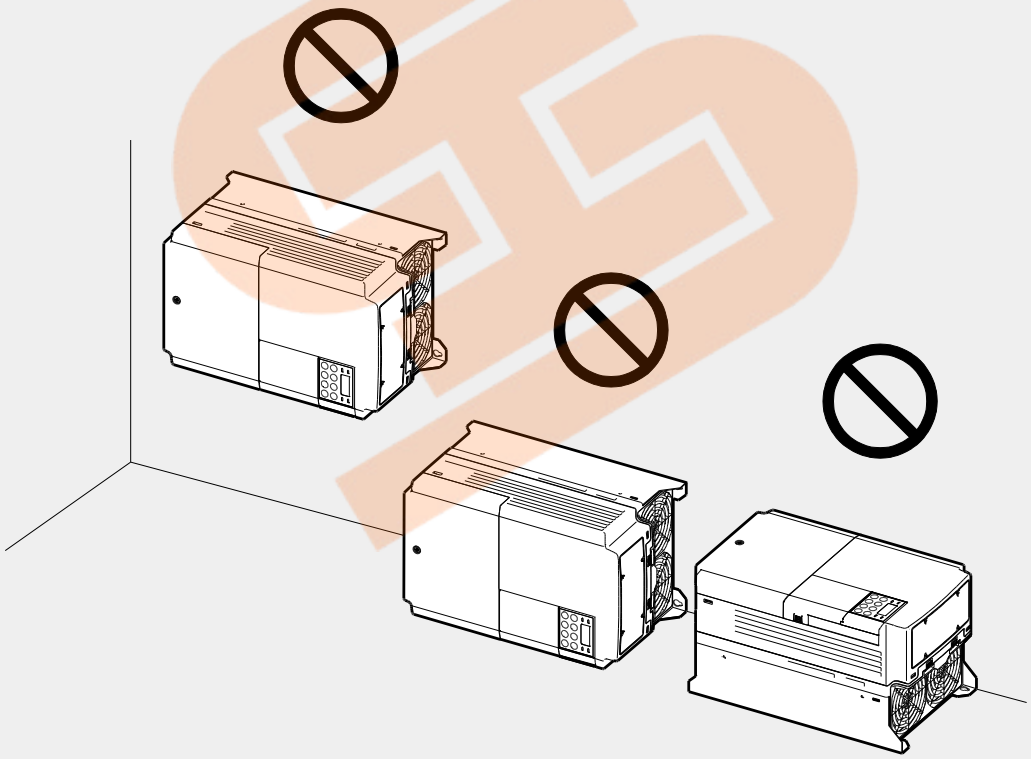

2.2 Cable Wiring

Open the front cover, remove the cable guides and control terminal cover, and then install the ground connection as specified. Complete the cable connections by connecting an appropriately rated cable to the terminals on the power and control terminal blocks.

Read the following information carefully before carrying out wiring connections to the inverter. All warning instructions must be followed.

Caution

- Install the inverter before carrying out wiring connections.
- Ensure that no small metal debris, such as wire cut-offs, remain inside the inverter. Metal debris in the inverter may cause inverter failure.
- Tighten terminal screws to their specified torque. Loose terminal block screws may allow the cables to disconnect and cause short circuit or inverter failure. Refer to *11.6 Terminal Screw Specification* on page *435* for torque specifications.
- Do not place heavy objects on top of electric cables. Heavy objects may damage the cable and result in electric shock.
- The power supply system for this equipment (inverter) is a grounded system. Only use a grounded power supply system for this equipment (inverter). Do not use a TT, TN, IT, or corner grounded system with the inverter.
- The equipment may generate direct current in the protective ground wire. When installing the residual current device (RCD) or residual current monitoring (RCM), only Type B RCDs and RCMs can be used.
- Use cables with the largest cross-sectional area, appropriate for power terminal wiring, to ensure that voltage drop does not exceed 2%.
- Use copper cables rated at 600V, 75℃ for power terminal wiring.
- Use copper cables rated at 300V, 75℃ for control terminal wiring.
- Separate control circuit wires from the main sircuits and other high voltage circuits(200V relay sequence circuit).
- Check for short circuits or wiring failure in the control circuit. They could cause system failure or device malfunction.
- Use shielded cables when wiring the control circuit. Failure to do so may cause malfunction due to interference. If a ground is needed, use STP (Shielded Twisted Pair) cables.
- If you need to re-wire the terminals due to wiring-related faults, ensure that the inverter keypad display is turned off and the charge lamp under the front cover is off before working on wiring connections. The inverter may hold a high voltage electric charge long after the power supply has been turned off.

Step 1 Front Cover, Control Terminal Cover and Cable Guide

The front cover, control terminal cover and cable guide must be removed to install cables. Refer to the following procedures to remove the covers and cable guide. The steps to remove these parts may vary depending on the inverter model.

0.8-1.5kW (single phase), 1.5-2.2kW (3-phase)

1 Loosen the bolt that secures the front cover (right side). Push and hold the latch on the right side of the cover. Then remove the cover by lifting it from the bottom and moving it away from the front of the inverter.

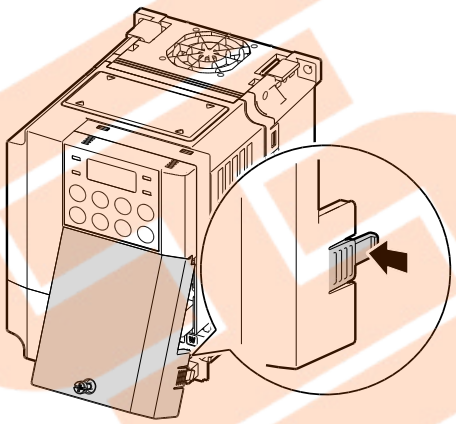

2 Remove the bolt that secures the front cover (left side) (❶). Push and hold the latch on the left side of the cover. Then remove the cover by lifting it from the bottom and moving it away from the front of the inverter (❷).

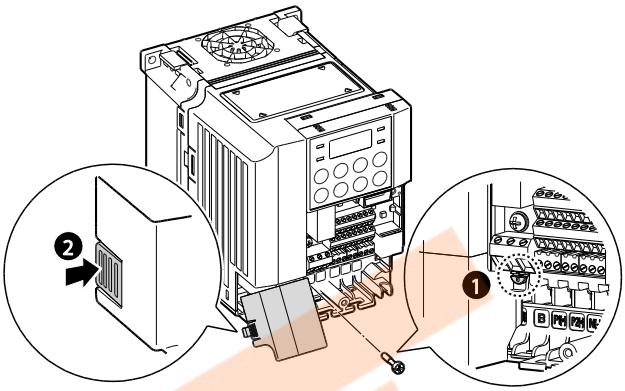

3 Connect the cables to the power terminals and the control terminals. For cable specifications, refer to *1.5 Cable Selection* on page *12*.

5.5~22kW (3-phase)

1 Loosen the bolt that secures the front cover. Then remove the cover by lifting it from the bottom and away from the front.

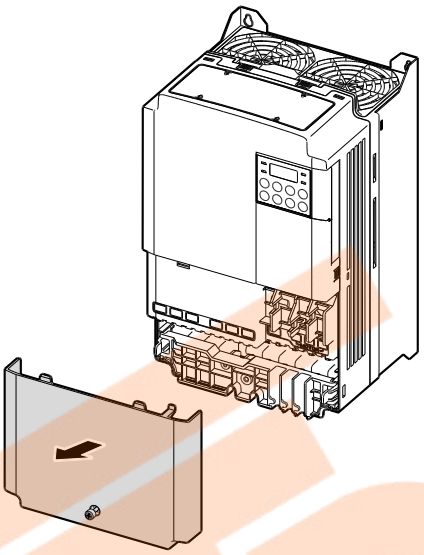

2 Push and hold the levers on both sides of the cable guide (❶) and then remove the cable guide by pulling it directly away from the front of the inverter (❷). In some models where the cable guide is secured by a bolt, remove the bolt first.

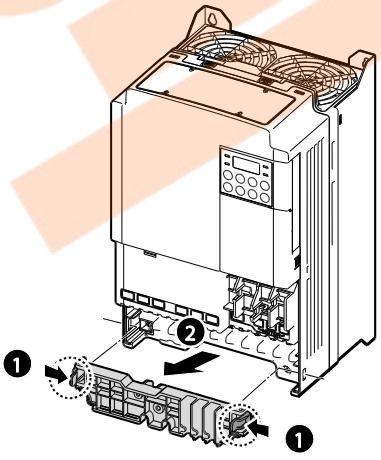

3 Push and hold the tab on the right side of the control terminal cover. Then remove the cover by lifting it from the bottom and moving it away from the front of the inverter.

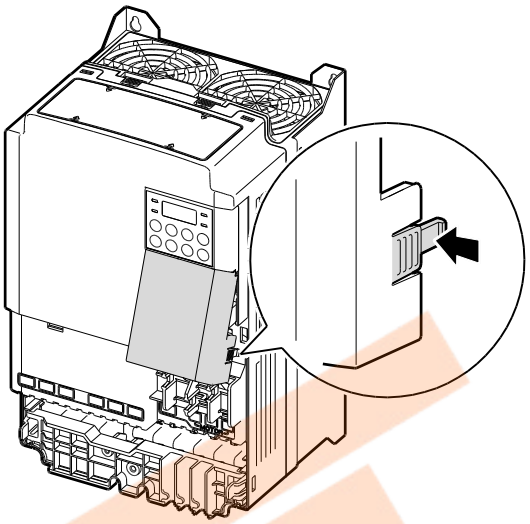

4 Connect the cables to the power terminals and the control terminals. For cable specifications, refer to *1.5 Cable Selection* on page *12*.

Note

To connect an LCD loader, remove the plastic knock-out from the bottom of the front cover (right side). Connect the signal cable of the LCD loader to the RJ-45 port on the control board. (0.4-22kW models only)

30-75kW(3-phase 4type)

1 Loosen the bolt that secures the terminal cover (❶). Push and hold the latch on the right side of the cover (❷). Then remove the cover by lifting it from the bottom and moving it away from the front of the inverter.

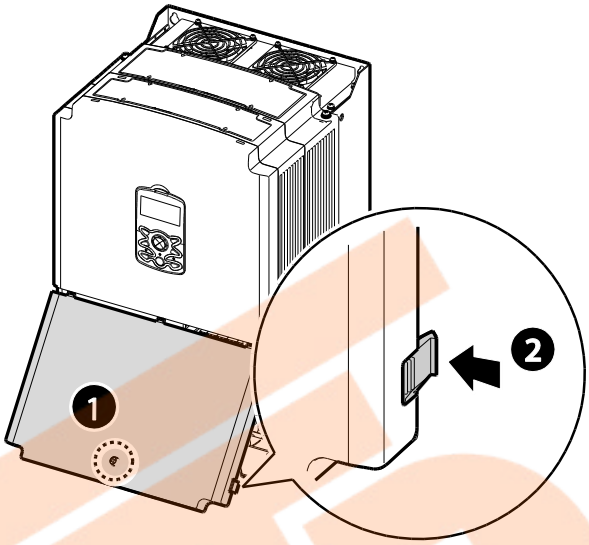

2 Connect the cables to the power terminals and the control terminals. For cable specifications, refer to *1.5 Cable Selection* on page *12*.

IP66

0.4-15kW (3-phase 2type), 0.4-22kW (3-phase 4type)

1 Loosen the bolt that secures the front cover. Then remove the cover by lifting it from the bottom and moving it away from the front of the inverter.

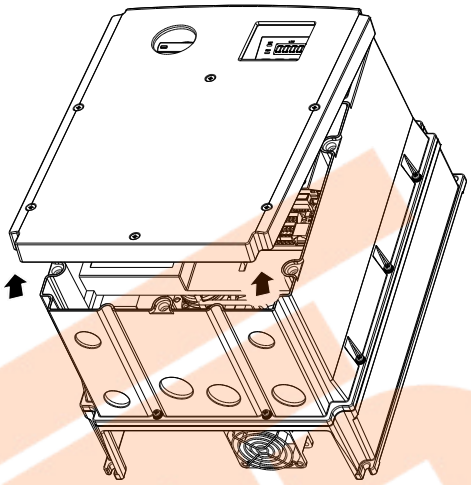

2 Set the bushing to every wiring hole before installing to power and I/O board terminals. Use the bushing that is NEMA 4X (IP66) or more.

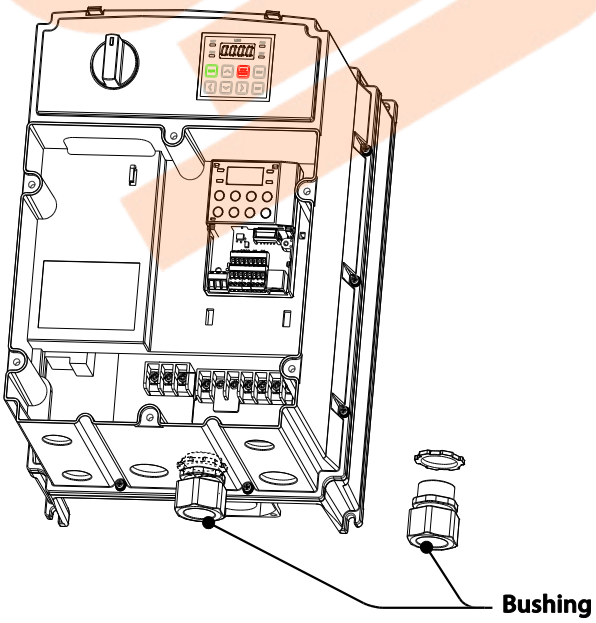

3 Connect the cables to the power terminals and the control terminals. For cable specifications, refer to *1.5 Cable Selection* on page *12*.

Note

To connect an LCD loader, remove the plastic knock-out from the bottom of the front cover (right side). Connect the signal cable of the LCD loader to the RJ-45 port on the control board. (0.4-22kW models only)

Step 2 Ground Connection

Remove the front cover(s), cable guide, and the control terminal cover. Then follow the instructions below to install the ground connection for the inverter.

Note

- 200 V products require Class 3 grounding. Resistance to ground must be < 100Ω.
- 400 V products require Special Class 3 grounding. Resistance to ground must be < 10Ω.

⚠ Warning

Install ground connections for the inverter and the motor by following the correct specifications to ensure safe and accurate operation. Using the inverter and the motor without the specified grounding connections may result in electric shock.

0.4-22kW

1 Locate the ground terminal and connect an appropriately rated ground cable to the terminals. Refer to *1.5 Cable Selection* on page *12* to find the appropriate cable specification for your installation.

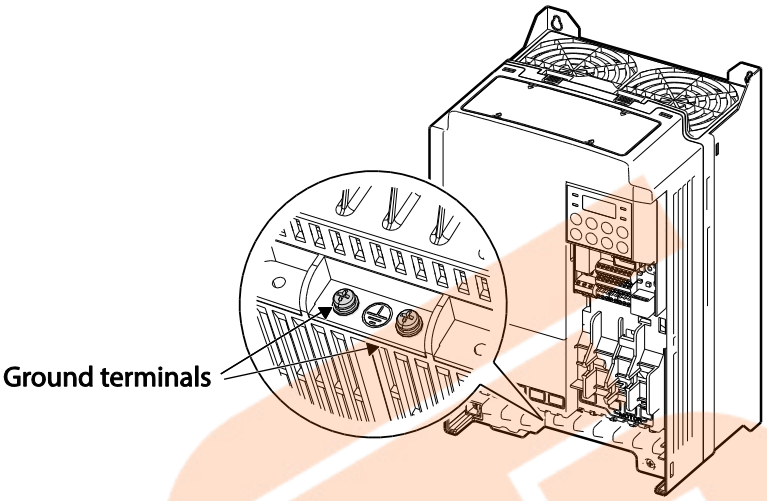

2 Connect the other ends of the ground cables to the supply earth (ground) terminal.

30-75kW

1 Locate the ground terminal and connect an appropriately rated ground cable to the terminals. Refer to *1.5 Cable Selection* on page *12* to find the appropriate cable specification for your installation.

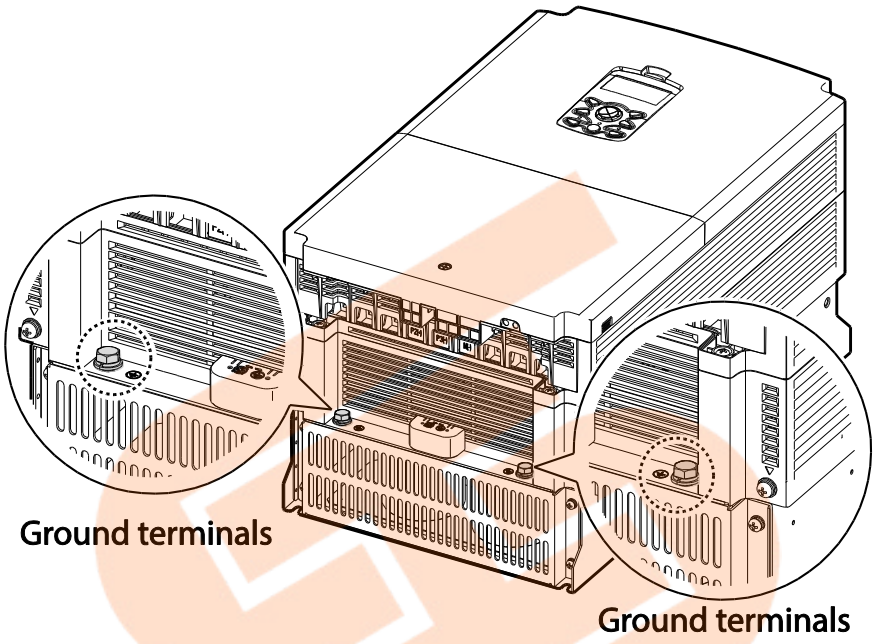

2 Connect the other ends of the ground cables to the supply earth (ground) terminal.

IP66

1 Locate the ground terminal and connect an appropriately rated ground cable to the terminals. Refer to *1.5 Cable Selection* on page *12* to find the appropriate cable specification for your installation.

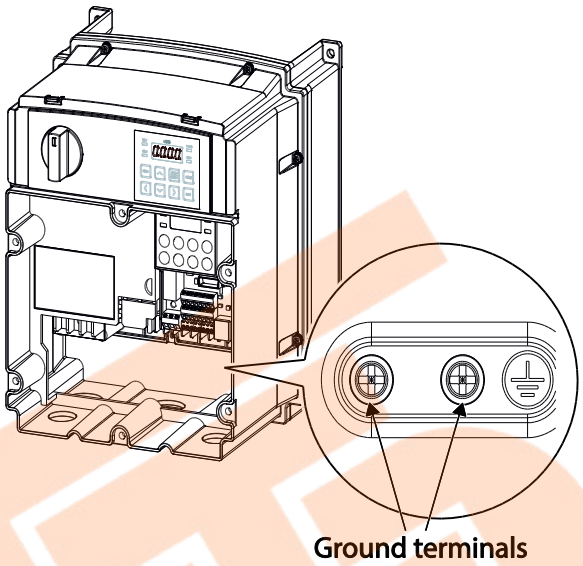

2 Connect the other ends of the ground cables to the supply earth (ground) terminal.

Step 3 Power Terminal Wiring

The following illustration shows the terminal layout on the power terminal block. Refer to the detailed descriptions to understand the function and location of each terminal before making wiring connections. Ensure that the cables selected meet or exceed the specifications in *1.5 Cable Selection* on page *12* before installing them.

Caution

- Apply rated torques to the terminal screws. Loose screws may cause short circuits and malfunctions. Tightening the screw too much may damage the terminals and cause short circuits and malfuctions.
- Use copper wires only with 600V, 75℃ rating for the power terminal wiring, and 300V, 75℃rating for the control terminal wiring.
- Do not connect two wires to one terminal when wiring the power.
- Power supply wirings must be connected to the R, S, and T terminals. Connecting them to the U, V, W terminals causes internal damages to the inverter. Motor should be connected to the U, V, and W Terminals. Arrangement of the phase sequence is not necessary.

Attention

- Appliquer des couples de marche aux vis des bornes. Des vis desserrées peuvent provoquer des courts-circuits et des dysfonctionnements. Ne pas trop serrer la vis, car cela risqué d'endommager les bornes et de provoquer des courts-circuits et des dysfonctionnements. Utiliser uniquement des fils de cuivre avec une valeur nominale de 600 V, 75 ℃ pour le câblage de la borne d'alimentation, et une valeur nominale de 300 V, 75 ℃ pour le câblage de la borne de commande.
- Ne jamais connecter deux câbles à une borne lors du câblage de l'alimentation.
- Les câblages de l'alimentation électrique doivent être connectés aux bornes R, S et T. Leur connexion aux bornes U, V et W provoque des dommages internes à l'onduleur. Le moteur doit être raccordé aux bornes U, V et W. L'arrangement de l'ordre de phase n'est pas nécessaire.

0.4-22kW

0.4kW (single phase), 0.4-0.8kW (3-phase)

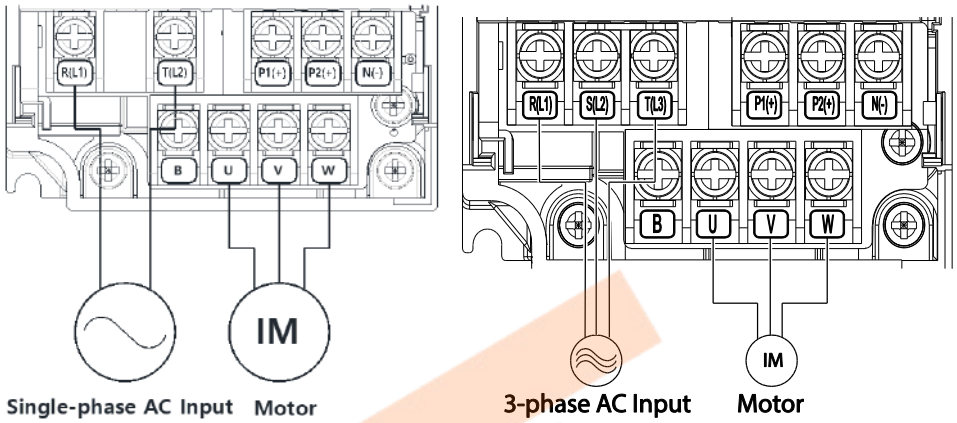

0.8~1.5kW (single phase), 1.5~2.2kW (3-phase)

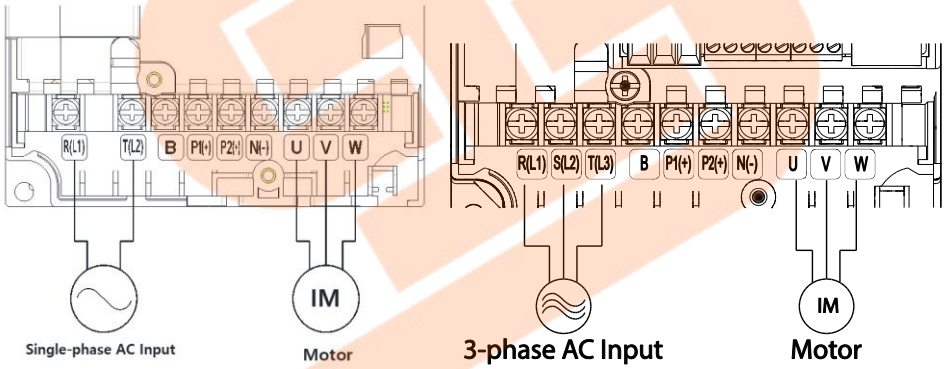

2.2kW (single phase), 3.7-4.0kW (3-phase)

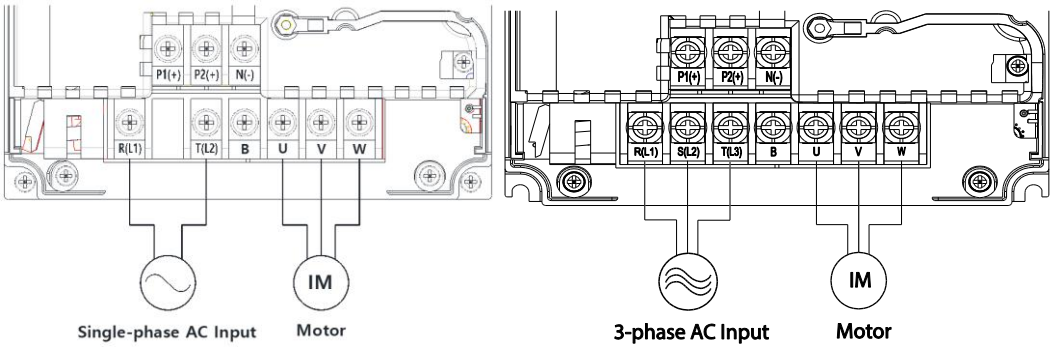

5.5~22kW (3-phase)

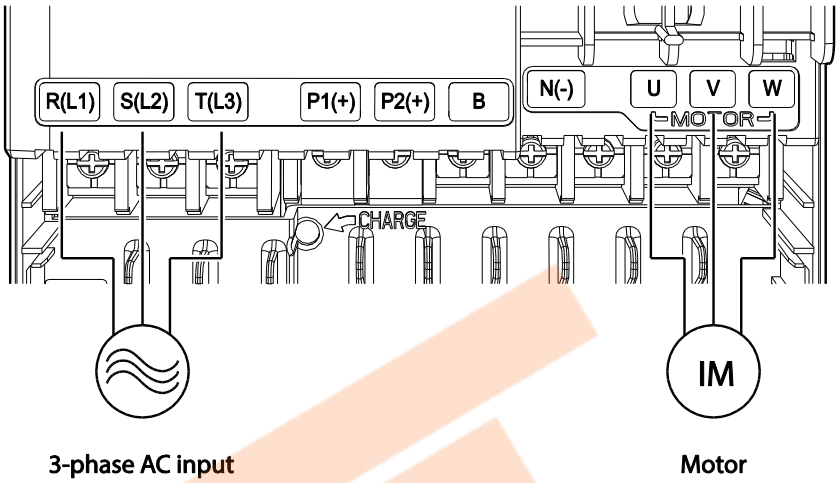

Power Terminal Labels and Descriptions (0.4-22kW)

Terminal Labels	Name	Description
R(L1)/S(L2)/T(L3)	AC power input terminal	Mains supply AC power connections.
P1(+)/N(-)	DC link terminal	DC voltage terminals.
P1(+)/P2(+)	DC reactor terminal	DC reactor wiring connection. (When you use the DC reactor, must remove short-bar)
P2(+)/B	Brake resistor terminals	Brake resistor wiring connection.
U/V/W	Motor output terminals	3-phase induction motor wiring connections.

30-75kW (3-phase)

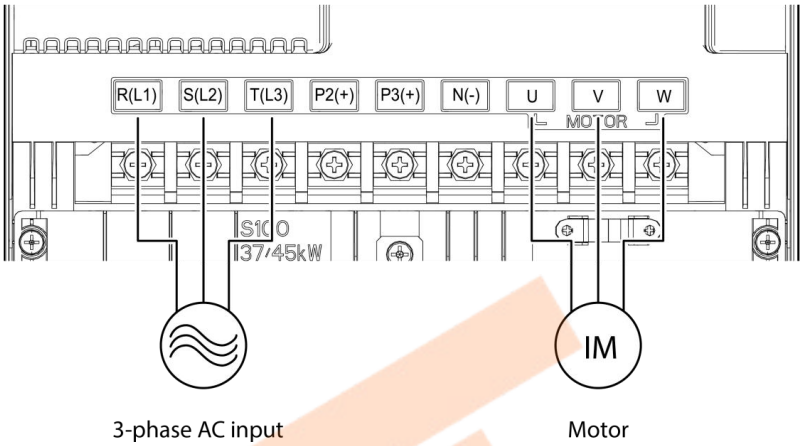

Power Terminal Labels and Descriptions (30-75kW)

Terminal Labels	Name	Description
R(L1)/S(L2)/T(L3)	AC power input terminal	Mains supply AC power connections.
P2(+)/N(-)	DC link terminal	DC voltage terminals.
P3(+)/N(-)	Brake unit terminals	Brake unit wiring connection.
U/V/W	Motor output terminals	3-phase induction motor wiring connections.

IP66

0.4-0.8kW (3-phase, single phase)

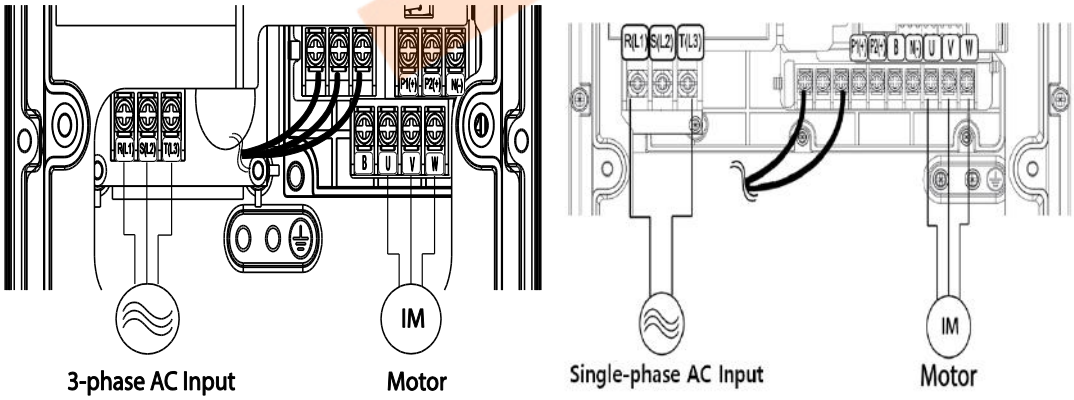

1.5-2.2kW (3-phase, single phase)

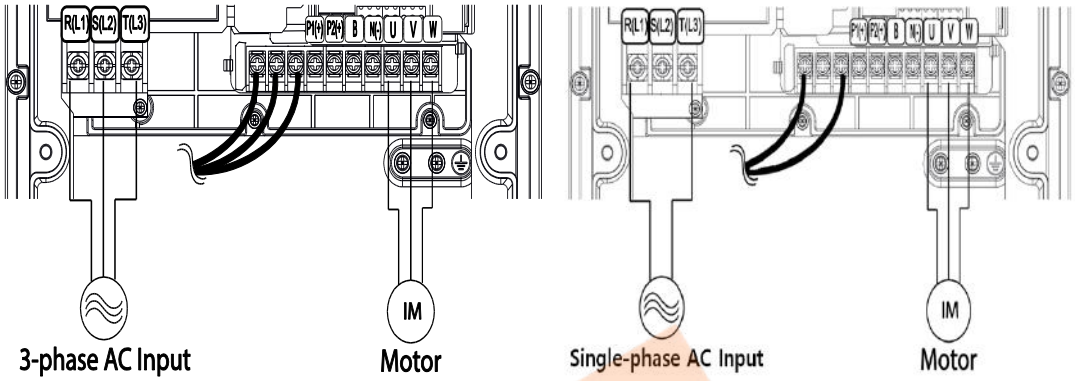

3.7-4.0kW (3-phase)

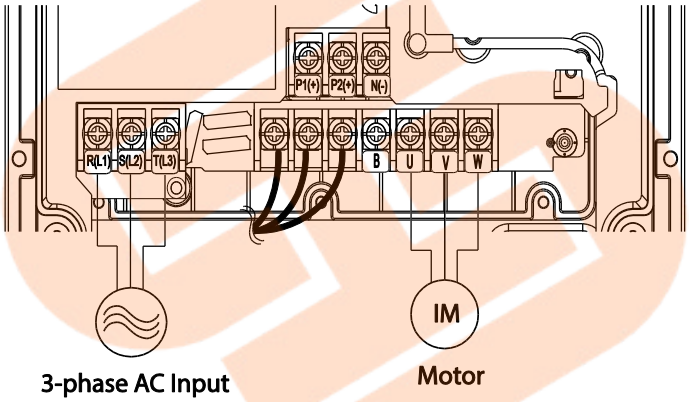

5.5~22kW (3-phase)

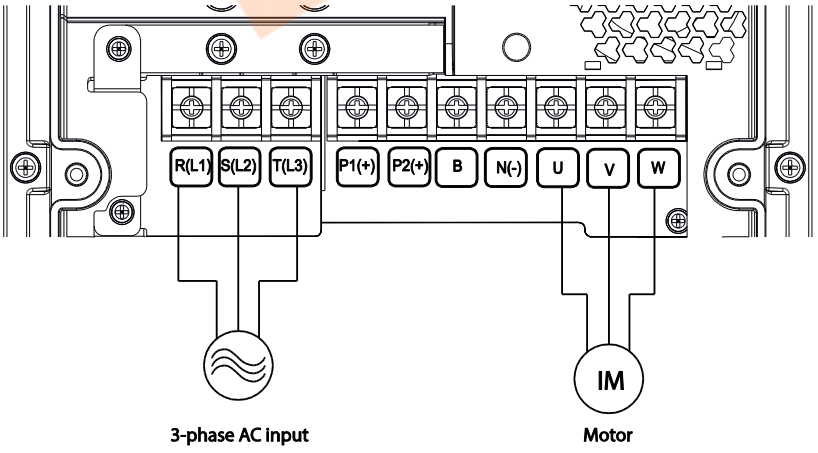

Power Terminal Labels and Descriptions (IP66)

Terminal Labels	Name	Description
R(L1)/S(L2)/T(L3)	AC power input terminal	Mains supply AC power connections.
P1(+)/N(-)	DC link terminal	DC voltage terminals.
P1(+)/P2(+)	DC reactor terminal	DC reactor wiring connection. (Remove the short-bar when you use the DC reactor.)
P2(+)/B	Brake resistor terminals	Brake resistor wiring connection.
U/V/W	Motor output terminals	3-phase induction motor wiring connections.

Note

- Do not use 3 core cables to connect a remotely located motor with the inverter.
- When you operating Brake resistor, the motor may vibrate under the Flux braking operation. In this case, please turn off the Flux braking(Pr.50).
- Make sure that the total cable length does not exceed 665ft (202m). For inverters < = 4.0kW capacity, ensure that the total cable length does not exceed 165ft (50m).
- Long cable runs can cause reduced motor torque in low frequency applications due to voltage drop. Long cable runs also increase a circuit's susceptibility to stray capacitance and may trigger over-current protection devices or result in malfunction of equipment connected to the inverter.
- Voltage drop is calculated by using the following formula:
  Voltage Drop (V) = [$\sqrt{3}$ X cable resistance (mΩ/m) X cable length (m) X current(A)] / 1000
- Use cables with the largest possible cross-sectional area to ensure that voltage drop is minimized over long cable runs. Lowering the carrier frequency and installing a micro surge filter may also help to reduce voltage drop.

Distance	< 165ft (50m)	< 330ft (100m)	> 330ft (100m)
Allowed Carrier Frequency	< 15 kHz (30-75kW: < 5 kHz)	< 5 kHz	< 2.5 kHz

⚠ Warning

Do not connect power to the inverter until installation has been fully completed and the inverter is ready to be operated. Doing so may result in electric shock.

Caution

- Power supply cables must be connected to the R, S, and T terminals. Connecting power cables to other terminals will damage the inverter.
- Use insulated ring lugs when connecting cables to R/S/T and U/V/W terminals.
- The inverter's power terminal connections can cause harmonics that may interfere with other communication devices located near to the inverter. To reduce interference the installation of noise filters or line filters may be required.
- To avoid circuit interruption or damaging connected equipment, do not install phase-advanced condensers, surge protection, or electronic noise filters on the output side of the inverter.
- To avoid circuit interruption or damaging connected equipment, do not install magnetic contactors on the output side of the inverter.

Step 4 Control Terminal Wiring

The illustrations below show the detailed layout of control wiring terminals, and control board switches. Refer to the detailed information provided below and *1.5 Cable Selection* on page *12* before installing control terminal wiring and ensure that the cables used meet the required specifications.

0.4-22kW

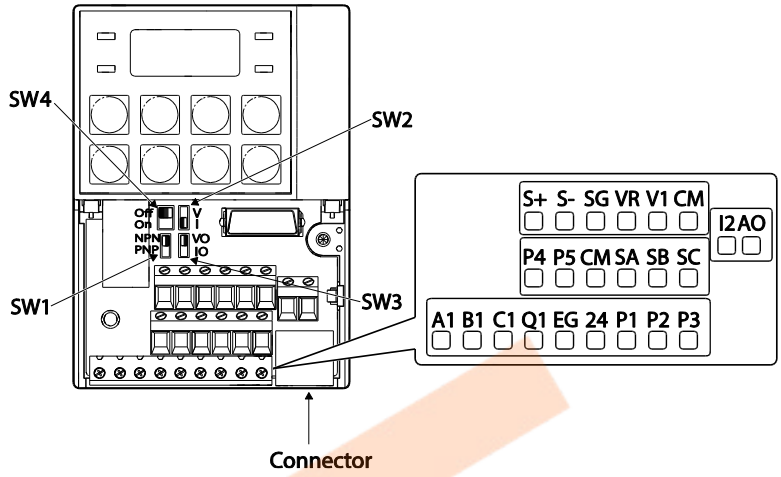

<Standard I/O>

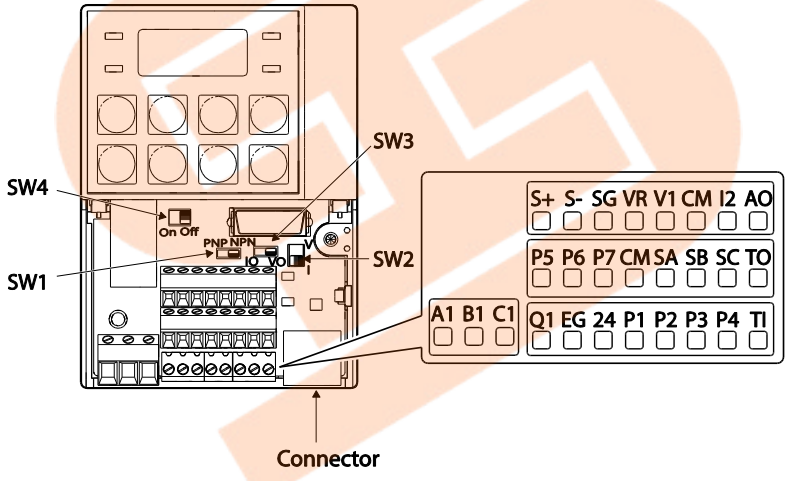

<Multiple I/O>

30-75kW

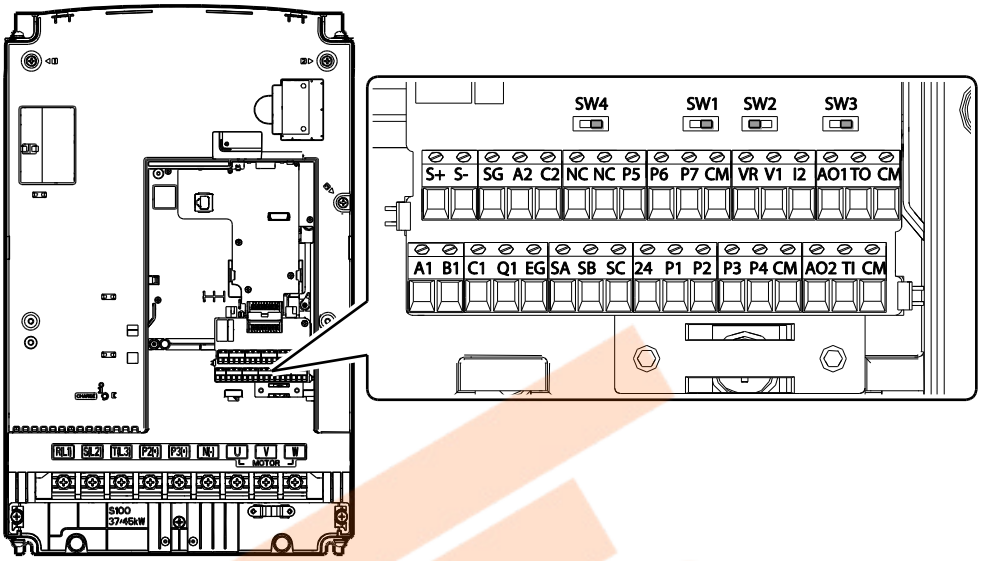

<30-75kW I/O>

Control Board Switches

Switch	Description
SW1	NPN/PNP mode selection switch
SW2	analog voltage/current input terminal selection switch
SW3	analog voltage/current output terminal selection switch
SW4	Terminating Resistor selection switch

Connector (0.4-22kW models only)

Name	Description
Connector	Connect to iS7 Loader or Smart Copier

0.4-22kW

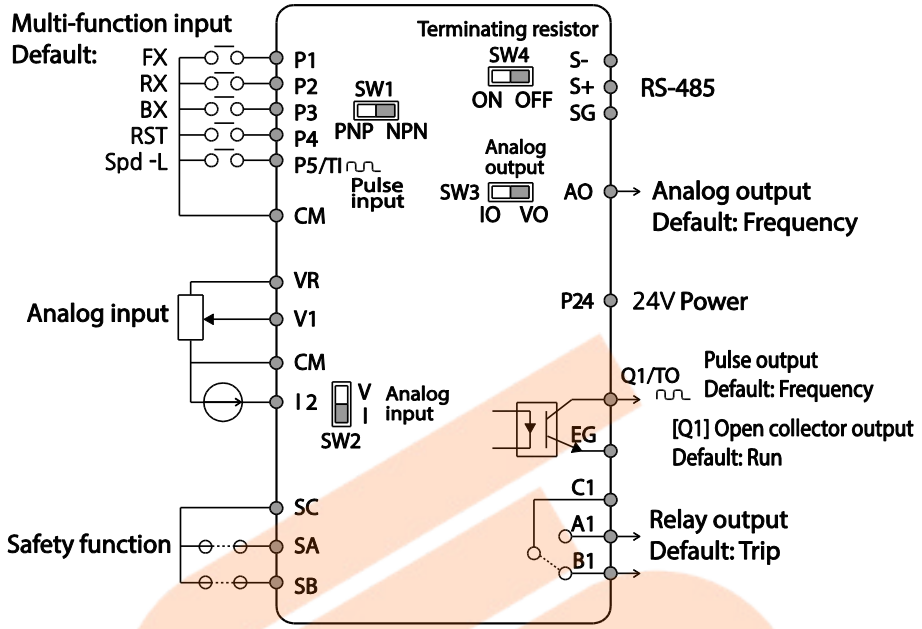

<Standard I/O>

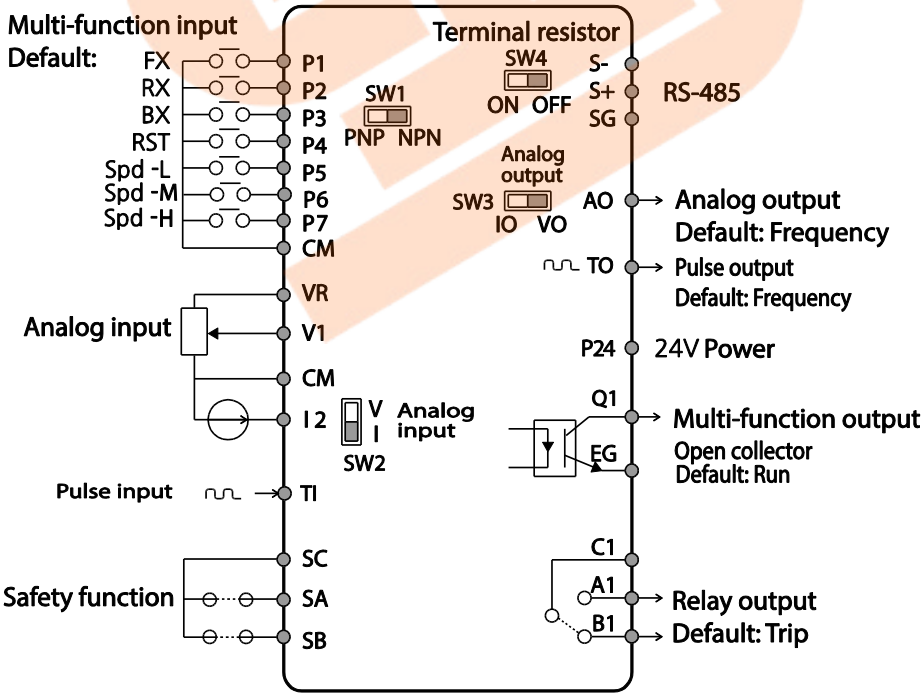

<Multiple I/O>

30-75kW

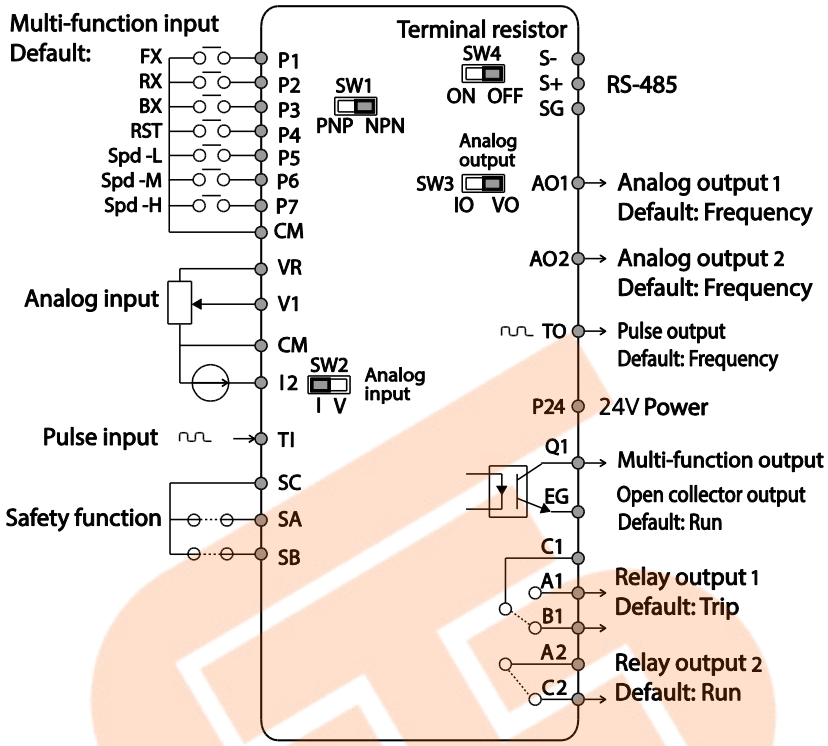

Input Terminal Labels and Descriptions

Function	Label	Name	Description
Multi-function terminal configuration	P1–P7	Multi-function Input 1-7	Configurable for multi-function input terminals. (Standard I/O is only provided for P5.)
	CM	Common Sequence	Common terminal for analog terminal inputs and outputs.
Analog input configuration	VR	Potentiometer frequency reference input	Used to setup or modify a frequency reference via analog voltage or current input. • Maximum Voltage Output: 12V • Maximum Current Output: 100mA, • Potentiometer: 1–5kΩ
	V1	Voltage input for frequency reference input	Used to setup or modify a frequency reference via analog voltage input terminal. • Unipolar: 0–10V (12V Max.) • Bipolar: -10–10V (±12V Max.)
	I2	Voltage/current input for frequency reference input	Used to setup or modify a frequency reference via analog voltage or current input terminals. Switch between voltage (V2) and current (I2) modes using a control board switch (SW2).

Function	Label	Name	Description
			V2 Mode: • Unipolar: 0–10V (12V Max.) I2 Mode • Input current: 4–20mA • Maximum Input current: 24mA • Input resistance: 249Ω
	TI	Pulse input for frequency reference input (pulse train)	Setup or modify frequency references using pulse inputs from 0 to 32kHz. • Low Level: 0–2.5V • High Level: 3.5–12V (In case of Standard I/O, Pulse input TI and Multi-function terminal P5 share the same terminal. Set the In.69 P5 Define to 54(TI).).
Safety functionality configuration	SA	Safety input A	Used to block the output from the inverter in an emergency. Conditions: • Normal Operation: Both the SA and SB terminals are connected to the SC terminal. • Output Block: One or both of the SA and SB terminals lose connection with the SC terminal.
	SB	Safety input B	
	SC	Safety input power source	DC 24V, < 25mA

Output/Communication Terminal Labels and Descriptions

Function	Label	Name	Description
Analog output	AO, AO1	Voltage/Current Output	Used to send inverter output information to external devices: output frequency, output current, output voltage, or a DC voltage. Operate switch (SW3) to select the signal output type (voltage or current) at the AO terminal. Output Signal Specifications: • Output voltage: 0–10V • Maximum output voltage/current: 12V/10mA • Output current: 0–20mA • Maximum output current: 24mA • Factory default output: Frequency
	AO2	Analog voltage output terminal	Use to send inverter output information, such as output frequency, output current, output voltage, or DC voltage to external devices. • Output voltage: 0-10 V • Maximum output voltage/current: 12V/10 mA
	TO	Pulse Output	Sends pulse signals to external devices to provide a single output value from the inverter of either: output frequency, output current, output voltage, or DC voltage. Output Signal Specifications: • Output frequency: 0–32kHz • Output voltage: 0–12V • Factory default output: Frequency (In case of Standard I/O, Pulse output TO and Multi-function output Q1 share the same terminal. Set the OU.33 Q1 Define to 39 (TO).) When connecting to a pulse between the S100 inverters, • Multiple I/O< -> Multiple I/O : Connect to TO -> TI, CM -> CM • Standard I/O <-> Standard I/O : Connect to Q1 -> P5, EG -> CM • Multiple I/O <-> Standard I/O : Do not support.
Digital output	Q1	Multi-functional (open collector)	DC 26V, 100mA or less Factory default output: Run

Function	Label	Name	Description
	EG	Common	Common ground contact for an open collector (with external power source)
	24	Internal 24V power source	Maximum output current: 150mA
	A1/C1/B1	Fault signal output	Sends out alarm signals when the inverter's safety features are activated (AC 250V <1A, DC 30V < 1A). • Fault condition: A1 and C1 contacts are connected (B1 and C1 open connection) • Normal operation: B1 and C1 contacts are connected (A1 and C1 open connection)
	A2, C2	Multi-functional relay output terminal	The signal is generated while operating. Define and use the multi-functional relay output terminal (Less than AC250 V 5A, Less than DC30 V 5A).
Communication	S+/S-/SG	RS-485 signal line	Used to send or receive RS-485 signals. Refer to *7 RS-485 Communication Features* on page 277 for more details.
	NC	NC	Not in use.

Preinsulated Crimp Terminal Connectors (Bootlace Ferrule) .

Use preinsulated crimp terminal connectors to increase reliability of the control terminal wiring. Refer to the specifications below to determine the crimp terminals to fit various cable sizes.

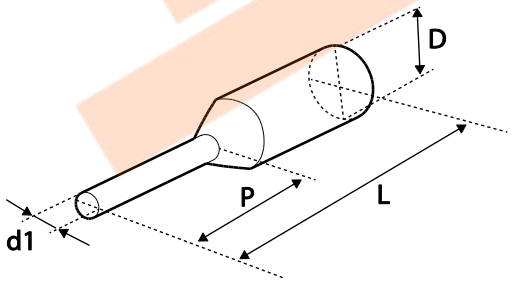

P/N	Cable Spec.		Dimensions (inches/mm)				Manufacturer
	AWG	mm²	L*	P	d1	D	
CE002506	26	0.25	10.4	6.0	1.1	2.5	JEONO (Jeono Electric,
CE002508			12.4	8.0			
CE005006	22	0.50	12.0	6.0	1.3	3.2	

P/N	Cable Spec.		Dimensions (inches/mm)				Manufacturer
	AWG	mm^2	L*	P	d1	D	
CE007506	20	0.75	12.0	6.0	1.5	3.4	http://www.jeono.com/)

* If the length (L) of the crimp terminals exceeds 0.5” (12.7mm) after wiring, the control terminal cover may not close fully.

To connect cables to the control terminals without using crimp terminals, refer to the following illustration detailing the correct length of exposed conductor at the end of the control cable.

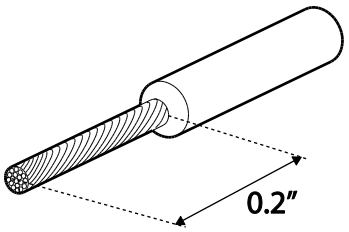

Note

- While making wiring connections at the control terminals, ensure that the total cable length does not exceed 165ft (50m).
- Ensure that the length of any safety related wiring does not exceed 100ft (30m).
- Ensure that the cable length between an LCD keypad and the inverter does not exceed 10ft (3.04m). Cable connections longer than 10ft (3.04m) may cause signal errors.
- Use ferrite material to protect signal cables from electro-magnetic interference.
- Take care when supporting cables using cable ties, to apply the cable ties no closer than 6 inches from the inverter. This provides sufficient access to fully close the front cover.
- When making control terminal cable connections, use a small flat-tip screw driver (0.1in wide (2.5mm) and 0.015in thick (0.4mm) at the tip).

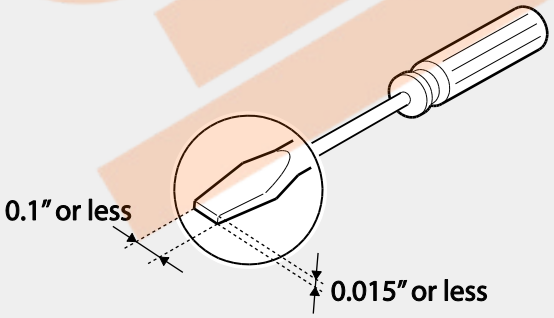

⚠ Warning

SA,SB, SC, they are shorted, have 24V voltage. Do not connect power to the inverter until installation has been fully completed and the inverter is ready to be operated. Doing so may result in electric shock.

Step 5 PNP/NPN Mode Selection

The S100 inverter supports both PNP (Source) and NPN (Sink) modes for sequence inputs at the terminal. Select an appropriate mode to suit requirements using the PNP/NPN selection switch (SW1) on the control board. Refer to the following information for detailed applications.

PNP Mode (Source)

Select PNP using the PNP/NPN selection switch (SW1). Note that the factory default setting is NPN mode. CM is is the common ground terminal for all analog inputs at the terminal, and P24 is 24V internal source. If you are using an external 24V source, build a circuit that connects the external source (-) and the CM terminal.

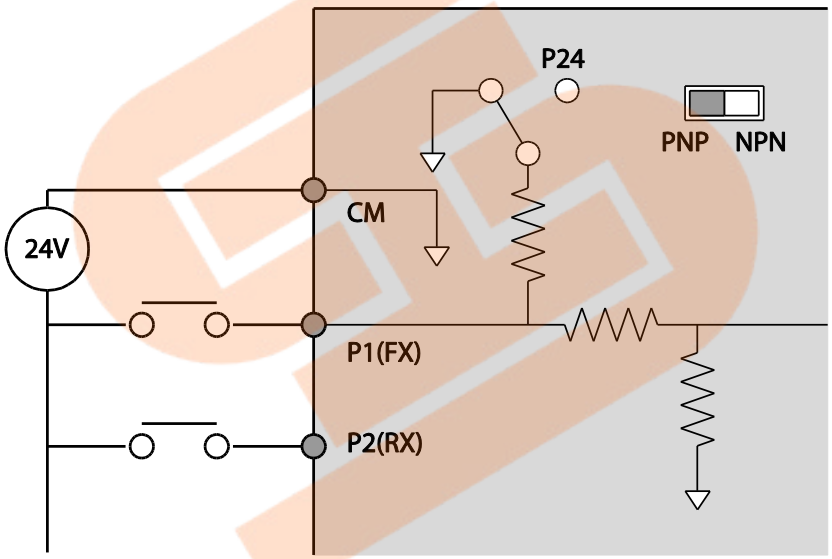

NPN Mode (Sink)

Select NPN using the PNP/NPN selection switch (SW1). Note that the factory default setting is NPN mode. CM is is the common ground terminal for all analog inputs at the terminal, and P24 is 24V internal source.

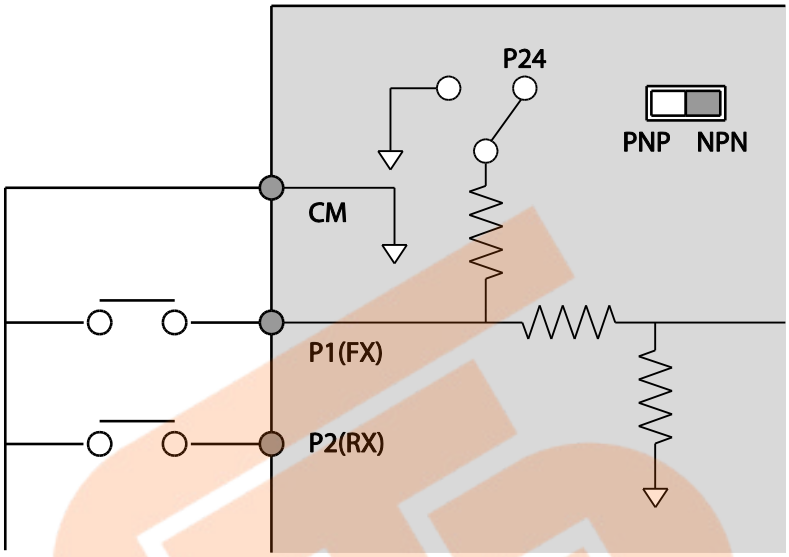

Step 6 Disabling the EMC Filter for Power Sources with Asymmetrical Grounding

S100 built-in EMC filter prevents electromagnetic interference by reducing radio emissions from the inverter. EMC filter is activated as a factory default design. If an inverter uses a power source with an asymmetrical grounding connection or non-grounding, the EMC filter MUST be turned off. EMC filter use is not always recommended, as it increases leakage current. Refer to *Product Identification* on page *1* to check if inverters have built-in EMC filters.

Note

S100, 400 V, 55-75 kW products do not have built-in EMC filters.

<table>
<tr><th colspan="4">Asymmetrical Grounding Connection</th></tr>
<tr><td>One phase of a delta connection is grounded</td><td>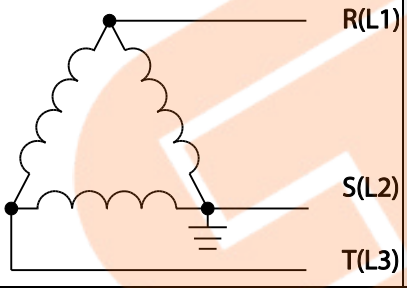
</td><td>Intermediate grounding point on one phase of a delta connection</td><td>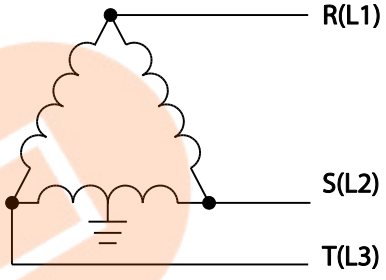
</td></tr>
<tr><td>The end of a single phase is grounded</td><td>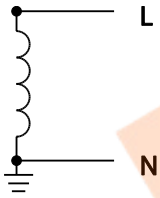
</td><td>A 3-phase connection without grounding</td><td>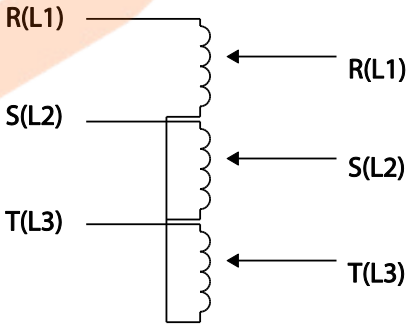
</td></tr>
</table>

⚠ Danger

- Do not activate the EMC filter if the inverter uses a power source with an asymmetrical grounding structure, for example a grounded delta connection. Personal injury or death by electric shock may result.
- Wait at least 10 minutes before opening the covers and exposing the terminal connections. Before starting work on the inverter, test the connections to ensure all DC voltage has been fully discharged. Personal injury or death by electric shock may result.

Disabling the Built-in EMC Filter

0.4-22kW

Before using the inverter, confirm the power supply's grounding system. Disable the EMC filter if the power source has an asymmetrical grounding connection. Refer to the figures below to locate the EMC filter on/off terminal and replace the metal bolt with the plastic bolt. If the EMC filter is required in the future, reverse the steps and replace the plastic bolt with the metal bolt to reconnect the EMC filter.

Steel bolt	Plastic bolt
	
EMC ON	EMC OFF

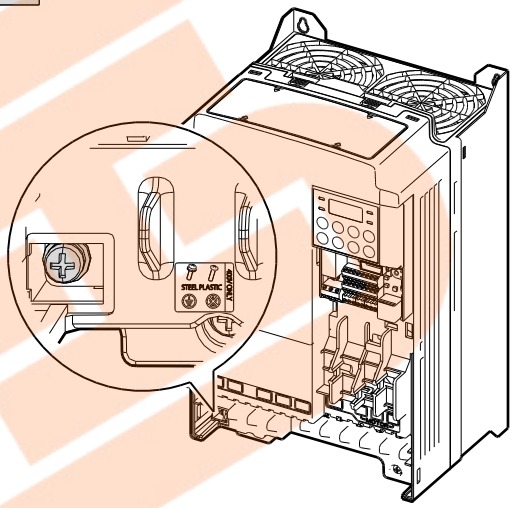

30-75kW

Follow the instructions listed below to disable the EMC filters.

1 Remove the EMC ground cover located at the bottom of the inverter.

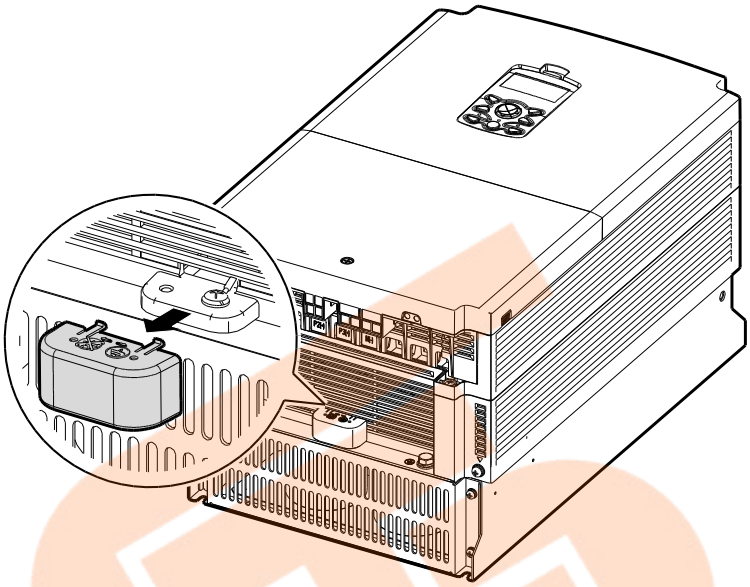

2 Remove the EMC ground cable from the right terminal (EMC filter-ON / factory default), and connect it to the left terminal (EMC filter-OFF / for power sources with asymmetrical grounding).

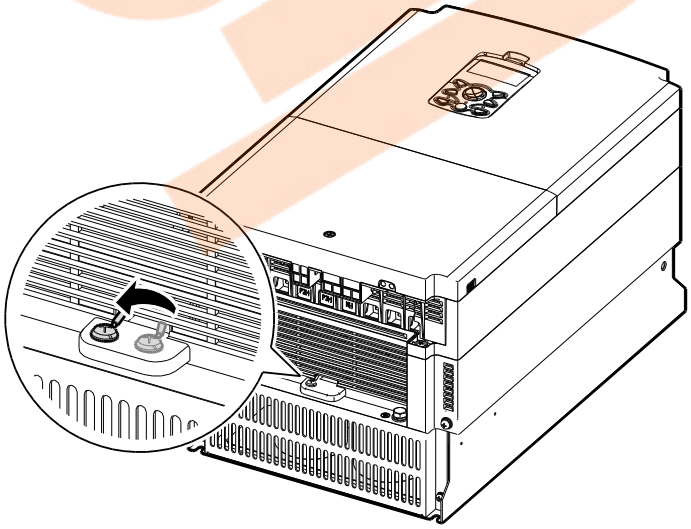

Note

The terminal on the right is used to ENABLE the EMC filter (factory default). The terminal on the left is used to DISABLE the EMC filter (for power sources with asymmetrical grounding).

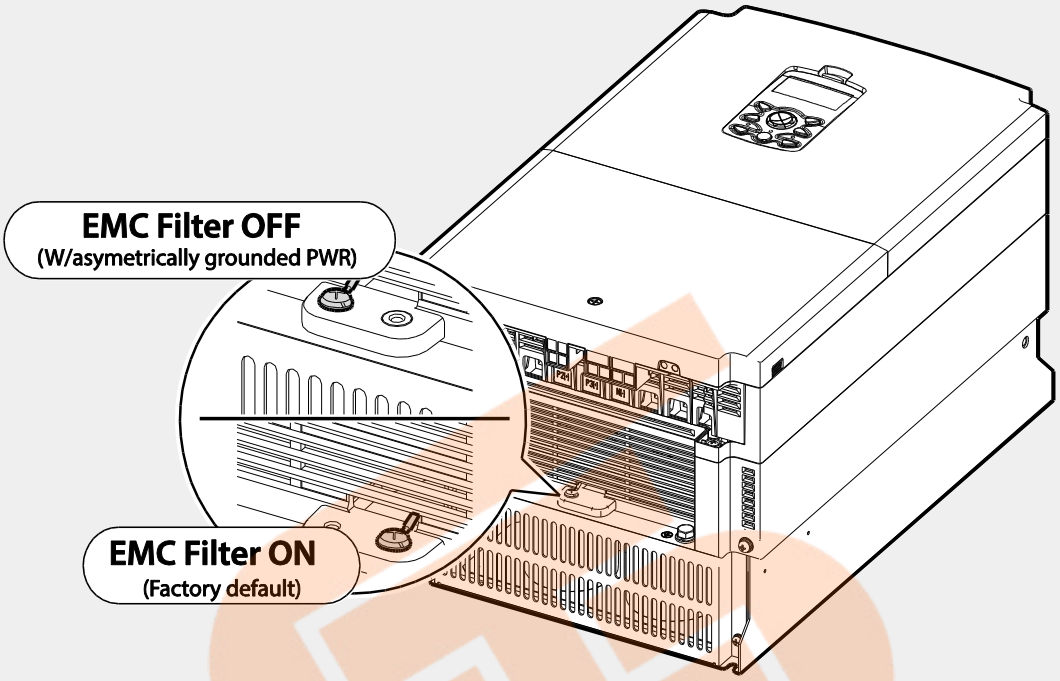

Step 7 Selecting the brake unit (30-75kW models only)

Select the brake unit as following:

UL form	Capacity of applied motor	Braking unit
Non UL type (A type)	30-37kW	SV037DBH-4
	45-55kW	SV075DBH-4, SV075DB-4
	75kW	
Non UL type (B type)	30-37kW	LSLV0370DBU-4LN
		LSLV0370DBU-4HN
	45-75kW	LSLV0750DBU-4LN
UL type	30-37kW	SV370DBU-4U
	45-55kW	SV550DBU-4U
	75kW	SV750DBU-4U

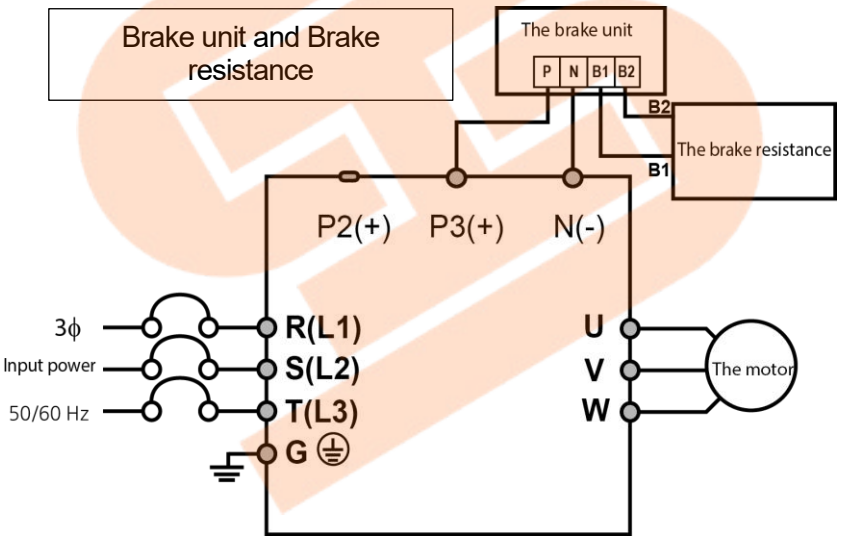

Step 8 Re-assembling the Covers and Routing Bracket

After completing the wiring and basic configurations, re-assemble the control terminal cover, cable routing bracket, and front cover respectively. Note that the assembly procedure may vary according to the product group or frame size of the product.

2.3 Post-Installation Checklist

After completing the installation, check the items in the following table to make sure that the inverter has been safely and correctly installed.

Items	Check Point	Ref.	Result
Installation Location/Power I/O Verification	Is the installation location appropriate?	p.8	
	Does the environment meet the inverter's operating conditions?	p.9	
	Does the power source match the inverter's rated input?	p.405	
	Is the inverter's rated output sufficient to supply the equipment? (Degraded performance will result in certain circumstances. Refer to *11.8 Continuous Rated Current Derating* on page 444 for details.	p.405	
Power Terminal Wiring	Is a circuit breaker installed on the input side of the inverter?	p.15	
	Is the circuit breaker correctly rated?	p.405	
	Are the power source cables correctly connected to the R/S/T terminals of the inverter? (Caution: connecting the power source to the U/V/W terminals may damage the inverter.)	p.30	
	Are the motor output cables connected in the correct phase rotation (U/V/W)? (Caution: motors will rotate in reverse direction if three phase cables are not wired in the correct rotation.)	p.28	
	Are the cables used in the power terminal connections correctly rated?	p.12	
	Is the inverter grounded correctly?	p.26	
	Are the power terminal screws and the ground terminal screws tightened to their specified torques?	p. 30	
	Are the overload protection circuits installed correctly on the motors (if multiple motors are run using one inverter)?	-	
	Is the inverter separated from the power source by a magnetic contactor (if a brake resistor is in use)?	p.15	
	Are advanced-phase capacitors, surge protection and electromagnetic interference filters installed correctly? (These devices MUST not be installed on the output side of the inverter.)	p.28	
Control Terminal Wiring	Are STP (shielded twisted pair) cables used for control terminal wiring?	-	
	Is the shielding of the STP wiring properly grounded?	-	
	If 3-wire operation is required, are the multi-function input terminals defined prior to the installation of the control wiring connections?	p.36	
	Are the control cables properly wired?	p36	

Items	Check Point	Ref.	Result
	Are the control terminal screws tightened to their specified torques?	p.19	
	Is the total cable length of all control wiring < 165ft (100m)?	p.45	
	Is the total length of safety wiring < 100ft (30m)?	p.45	
Miscellaneous	Are optional cards connected correctly?	-	
	Is there any debris left inside the inverter?	p.19	
	Are any cables contacting adjacent terminals, creating a potential short circuit risk?	-	
	Are the control terminal connections separated from the power terminal connections?	-	
	Have the capacitors been replaced if they have been in use for > 2 years?	-	
	Have the fans been replaced if they have been in use for > 3 years?	-	
	Has a fuse been installed for the power source?	p.433	
	Are the connections to the motor separated from other connections?	-	

Note

STP (Shielded Twisted Pair) cable has a highly conductive, shielded screen around twisted cable pairs. STP cables protect conductors from electromagnetic interference.

2.4 Test Run

After the post-installation checklist has been completed, follow the instructions below to test the inverter.

1 Turn on the power supply to the inverter. Ensure that the keypad display light is on.

2 Select the command source.

3 Set a frequency reference, and then check the following:

- If V1 is selected as the frequency reference source, does the reference change according to the input voltage at VR?
- If V2 is selected as the frequency reference source, is the voltage/current selector switch (SW2) set to voltage, and does the reference change according to the input voltage?
- If I2 is selected as the frequency reference source, is the voltage/current selector switch (SW2) set to current, and does the reference change according to the input current?

4 Set the acceleration and deceleration time.

5 Start the motor and check the following:

- Ensure that the motor rotates in the correct direction (refer to the note below).
- Ensure that the motor accelerates and decelerates according to the set times, and that the motor speed reaches the frequency reference.

Note

If the forward command (Fx) is on, the motor should rotate counterclockwise when viewed from the load side of the motor. If the motor rotates in the reverse direction, switch the cables at the U and V terminals.

Remarque

Si la commande avant (Fx) est activée, le moteur doit tourner dans le sens anti-horaire si on le regarde côté charge du moteur. Si le moteur tourne dans le sens inverse, inverser les câbles aux bornes U et V.

Verifying the Motor Rotation

1 On the keypad, set the drv (Frequency reference source) code in the Operation group to 0

(Keypad).

2 Set a frequency reference.

3 Press the [RUN] key. Motor starts forward operation.

4 Observe the motor's rotation from the load side and ensure that the motor rotates counterclockwise (forward).

If the motor rotates in the reverse direction, two of the U/V/W terminals need to be switched.

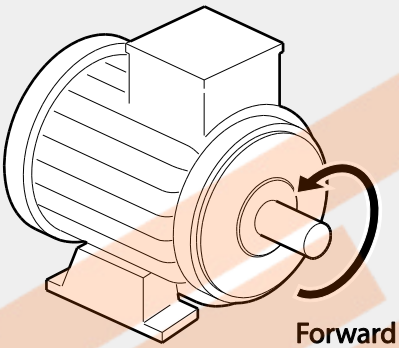

Forward operation

Caution

- Check the parameter settings before running the inverter. Parameter settings may have to be adjusted depending on the load.
- To avoid damaging the inverter, do not supply the inverter with an input voltage that exceeds the rated voltage for the equipment.
- Before running the motor at maximum speed, confirm the motor's rated capacity. As inverters can be used to easily increase motor speed, use caution to ensure that motor speeds do not accidently exceed the motor's rated capacity.

3 Learning to Perform Basic Operations

This chapter describes the keypad layout and functions. It also introduces parameter groups and codes, required to perform basic operations. The chapter also outlines the correct operation of the inverter before advancing to more complex applications. Examples are provided to demonstrate how the inverter actually operates.

3.1 About the Keypad

The keypad is composed of two main components – the display and the operation (input) keys. Refer to the following illustration to identify part names and functions.

3.1.1 0.4-22kW Models

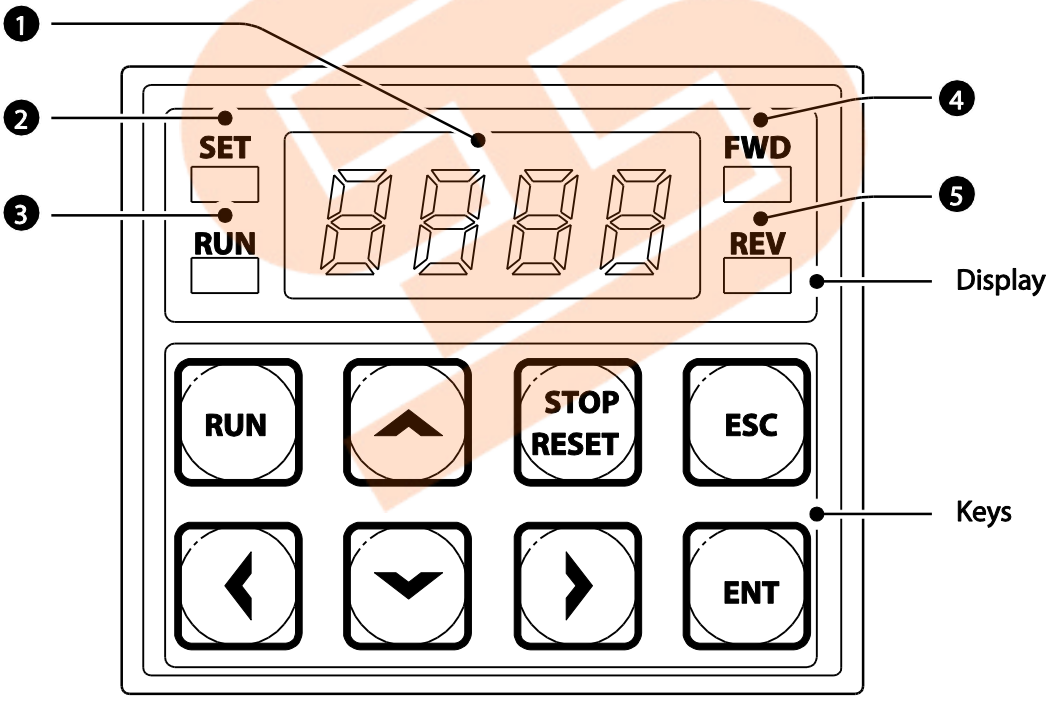

3.1.2 30-75kW Models

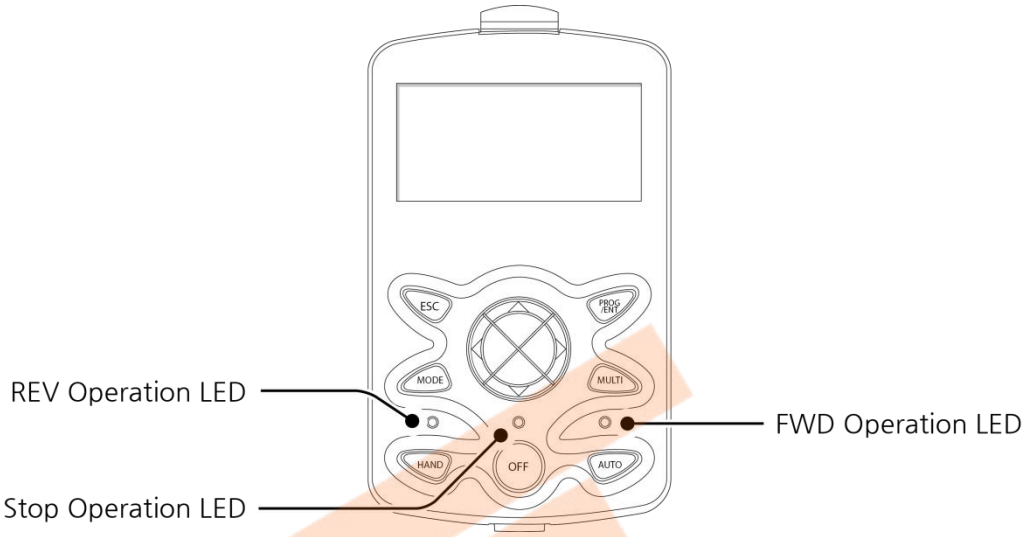

3.1.3 About the Display

The following table lists display part names and their functions.

3.1.3.1 0.4-22kW Models

No.	Name	Function
❶	7-Segment Display	Displays current operational status and parameter information.
❷	SET Indicator	LED flashes during parameter configuration and when the ESC key operates as the multi-function key.
❸	RUN Indicator	LED turns on (steady) during an operation, and flashes during acceleration or deceleration.
❹	FWD Indicator	LED turns on (steady) during forward operation.
❺	REV Indicator	LED turns on (steady) during reverse operation.

The table below lists the way that the keypad displays characters (letters and numbers).

0	0	A	A	K	K	U	U
1	1	b	B	L	L	v	V
2	2	C	C	n	M	W	W
3	3	d	D	n	N	X	X
4	4	E	E	O	O	y	Y
5	5	F	F	P	P	Z	Z
6	6	G	G	q	Q	-	-
7	7	H	H	r	R	-	-
8	8	I	I	S	S	-	-
9	9	J	J	t	T	-	-

3.1.3.2 30-75kW Models

Monitor mode display

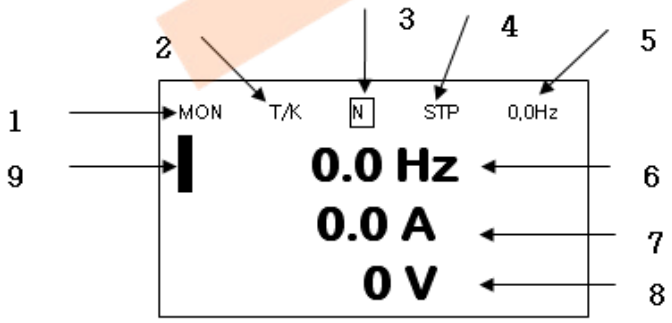

Parameter settings display

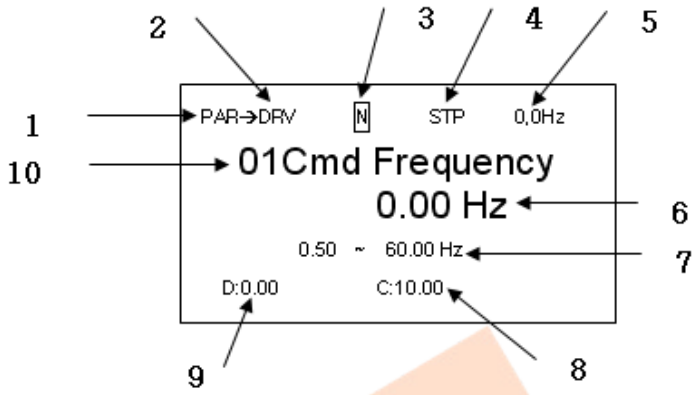

Names displayed in monitor mode and parameter settings

No.	Names displayed in monitor mode	No.	Names displayed in parameter settings
1	Mode	1	Mode
2	Operating/frequency command	2	Group
3	Multi-functional key settings	3	Multi-functional key settings
4	Inverter operation status	4	Inverter operation status
5	Items displayed in the status window	5	Items displayed in the status window
6	Monitor mode display 1	6	Display parameters
7	Monitor mode display 2	7	Available settings range
8	Monitor mode display 3	8	Existing setting values
9	Monitor mode cursor	9	Factory default values
		10	Code numbers and names

Display details

No.	Name	Display	Description
1	Mode	MON	Monitor Mode
		PAR	Parameter Mode
		TRP	Trip Mode
		CNF	Config Mode
2	Operation commands	K	Keypad operation command
		O	Field Bus communication option operation command

No.	Name	Display	Description
		A	Application option operation command
		R	Internal 485 operation command
		T	Terminal operation command
	Frequency commands	K	Keypad frequency command
		V	V1 input frequency command
		P	Pulse input frequency command
		U	Frequency command for UP operation (Up - Down operation)
		D	Frequency command for DOWN operation (Up - Down operation)
		S	Frequency command for STOP operation (Up - Down operation)
		O	FBus Option frequency command
		J	Jog frequency command
		R	Int 485 frequency command
		1 ~9, A~F	Multi-step frequency command
3	Multi-functional key settings	JOG Key	Keypad JOG operation mode
		Local/Remote	Able to select either local or remote operation
		UserGrpSelKey	Register or delete user group parameters in parameter mode
4	Inverter operation status	STP	Motor stopped
		FWD	Operating in forward direction
		REV	Operating in reverse direction
		DC	DC output
		WAN	Warning
		STL	Stall
		SPS	Speed Search
		OSS	S/W overcurrent protective function is on
		OSH	H/W overcurrent protective function is on
		TUN	Auto Tuning

3.1.4 Operation Keys

3.1.4.1 0.4-22kW Models

Caution

Install a separate emergency stop switch in the circuit. The [STOP/RESET] key on the keypad works only when the inverter has been configured to accept an input from the keypad.

The following table lists the names and functions of the keypad's operation keys.

Key	Name	Description
	[RUN] key	Used to run the inverter (inputs a RUN command).
	[STOP/RESET] key	STOP: stops the inverter. RESET: resets the inverter following fault or failure condition.
	[▲] key, [▼] key	Switch between codes, or to increase or decrease parameter values.
	[◀] key, [▶] key	Switch between groups, or to move the cursor during parameter setup or modification.
	[ENT] key	Used to select, confirm, or save a parameter value.
	[ESC] key	A multi-function key used to configure different functions, such as: • Jog operation • Remote/Local mode switching • Cancellation of an input during parameter setup

3.1.4.2 30-75kW Models

The following table lists the names and functions of the LCD's operation keys.

Key	Name	Description
	[MODE] Key	Used to switch between modes.
	[PROG / Ent] Key	Used to select, confirm, or save a parameter value.
	[UP] key [DOWN] key	Switch between codes or increase or decrease parameter values.
	[LEFT] key [RIGHT] key	Switch between groups or move the cursor during parameter setup or modification.
	[MULTI] Key	Used to perform special functions, such as user code registration.
	[ESC] Key	Used to cancel an input during parameter setup. • Pressing the [ESC] key before pressing the [PROG / ENT] key reverts the parameter value to the previously set value. • Pressing the [ESC] key while editing the codes in any function group makes the keypad display the first code of the function group. • Pressing the [ESC] key while moving through the modes makes the keypad display Monitor mode.
	[FWD] Key	Used to operate the motor in the forward direction.
	[REV] Key	Used to operate the motor in the reversed direction.
	[STOP/RESET] Key	Used to stop motor operation. Used to reset the inverter following fault or failure condition.

3.1.5 Control Menu

0.4-22kW Control Menu

The following table lists the functions groups under Parameter mode.

Function Group Name	Keypad Display	LCD Display	Description
Operation	0.00	DRV-01	Configures reference frequencies.
	ACC	DRV-03	Configures acceleration times.
	dEC	DRV-04	Configures deceleration times.
	drv	DRV-06	Used to select operation command.
	Frq	DRV-07	Configures operation frequencies.
	St 1	BAS-50	Configures the Step Freq. 1 of the multi-step frequencies.
	St2	BAS-51	Configures Step Freq. 2 of the multi-step frequencies.
	St3	BAS-52	Configures Step Freq. 2 of the multi-step frequencies.
	CUr	Monitor Line Display (CNF-20~23)	Displays current output current.
	rPM		Displays current speed of a load (RPM).
	dCL		Displays current DC LINK voltage.
	vOL		Displays current output voltage.
	nOn	TRP Last-1	Displays recent trip history.
	drC	-	Used to select motor operation direction.
Drive	dr	DRV	Configures parameters for basic operations. These include jog operation, motor capacity evaluation, torque boost, and other keypad related parameters.
Basic	bA	BAS	Configures basic operation parameters. These parameters include motor parameters and multi-step frequency parameters.
Advanced	Ad	ADV	Configures acceleration or deceleration patterns, frequency limits, etc.
Control	Cn	CON	Configures sensorless vector-related features.
Input Terminal	In	IN	Configures input terminal–related features, including digital multi–functional inputs and analog inputs.
Output Terminal	OU	OUT	Configures output terminal–related features such as relays and analog outputs.

Function Group Name	Keypad Display	LCD Display	Description
Communication	COM	COM	Configures communication features for RS-485 or other communication options.
Application	APP	APP	Configures functions related to PID control.
Protection	PRT	PRT	Configures motor and inverter protection features.
Motor 2 (Secondary motor)	M2	M2	Configures secondary motor related features. The secondary motor (M2) group appears on the keypad only when one of the multi-function input terminals (In.65–In.71) has been set to 26 (Secondary motor).
User Sequence	USS	USS	Used to implement simple sequences with various function blocks.
User Sequence Function	USF	USF	

30-75kW Control Menu

The S100 inverter uses 5 modes to monitor or configure different functions. The parameters in Parameter mode are divided into smaller groups of relevant functions. Press the [Mode] key to change to Parameter mode.

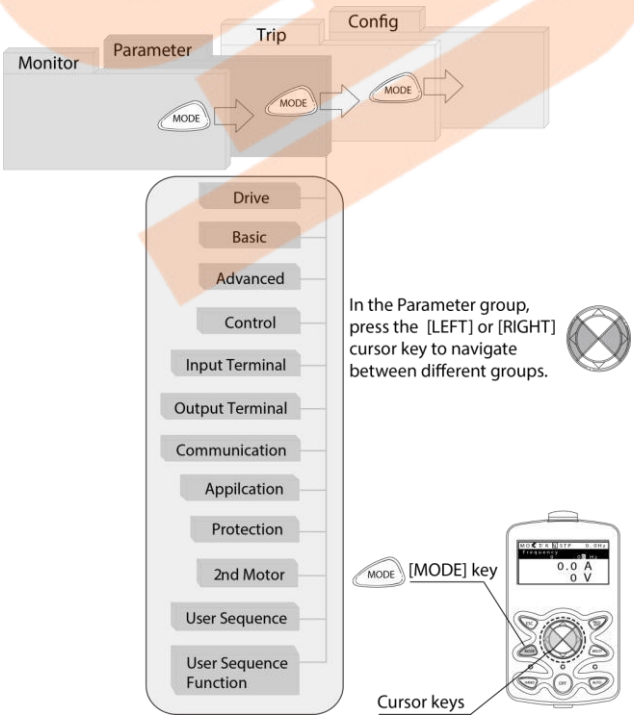

The following table lists the 5 display modes used to control the inverter functions.

Mode Name	LCD Display	Description
Monitor mode	MON	Displays the inverter's operation status information. In this mode, information including the inverter's frequency reference, operation frequency, output current, and voltage may be monitored.
Parameter mode	PAR	Used to configure the functions required to operate the inverter. These functions are divided into 14 groups based on purpose and complexity.
Trip mode	TRP	Used to monitor the inverter's fault trip information, including the previous fault trip history. When a fault trip occurs during inverter operation, the operation frequency, output current, and output voltage of the inverter at the time of the fault may be monitored. This mode is not displayed if the inverter is not at fault and fault trip history does not exist.
Config mode	CNF	Used to configure the inverter features that are not directly related to the operation of the inverter. The settings you can configure in the Config mode include keypad display language options, monitor mode environment settings, communication module display settings, and parameter duplication and initialization.

3.2 Learning to Use the Keypad

The keypad enables movement between groups and codes. It also enables users to select and configure functions. At code level, you can set parameter values to turn on or off specific functions, or decide how the functions will be used. Refer to *8 Table of Functions* on page *307* to find the functions you need.

Confirm the correct values (or the correct range of the values), and then follow the examples below to configure the inverter with the keypad.

3.2.1 Display Mode Selection (30-75kW models only)

The following figure illustrates how the display modes change when you press the [Mode] button on the keypad. You can continue to press the [Mode] key until you get to the desired mode.

User mode and Trip mode are not displayed when all the inverter settings are set to the factory default (User mode must be configured before it is displayed on the keypad, and Trip mode is displayed only when the inverter is at fault, or has previous trip fault history).

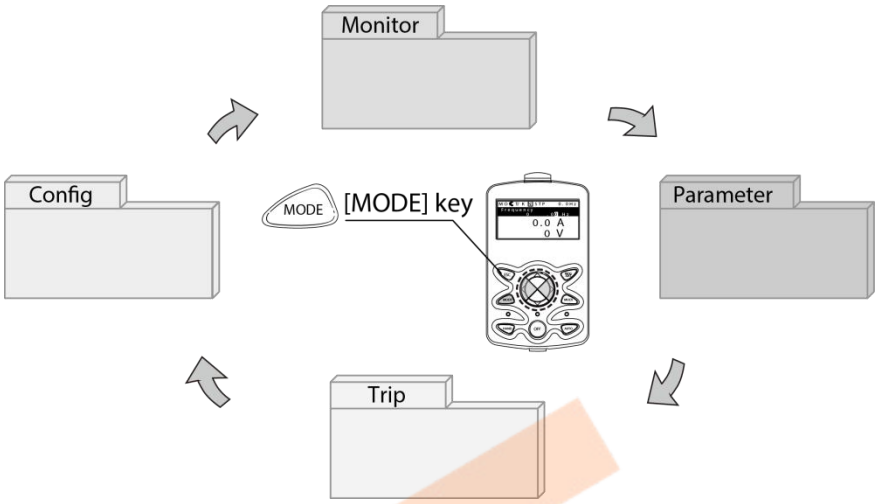
Monitor
Config
MODE
[MODE] key
Parameter
Trip

Mode selection in factory default condition

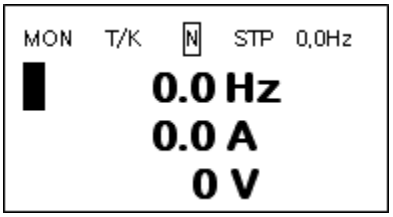	• When the power is turned on, Monitor mode is displayed. • Press the [MODE] key.
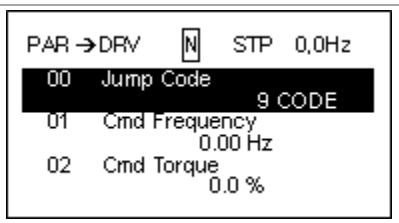	• Parameter mode • Press the [MODE] key.
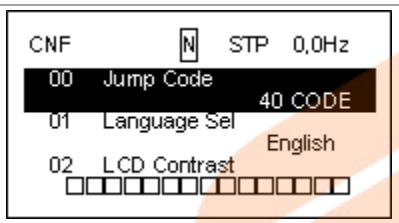	• Config (CNF) mode • Press the [MODE] key.
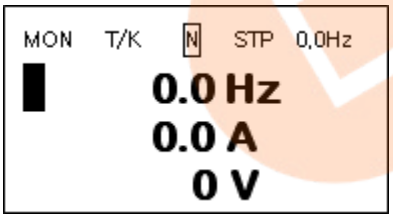	• Monitor mode is displayed again.

Switching between groups when Trip mode is added

Trip mode is accessible only when the inverter has trip fault history. Refer to *4 Learning Basic Features* on page *99* for information about monitoring faults.

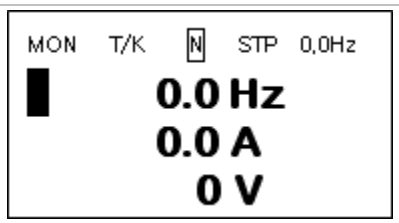	• When the power is turned on, Monitor mode is displayed. • Press the [MODE] key.
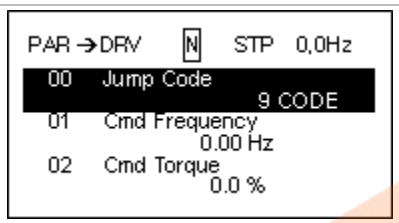	• Parameter mode • Press the [MODE] key.
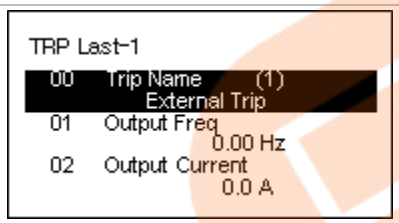	• Trip mode • Press the [MODE] key.
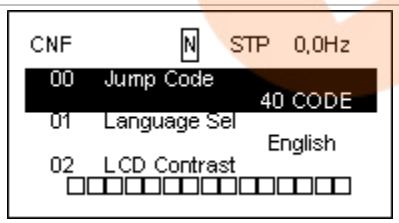	• CNF mode • Press the [MODE] key.
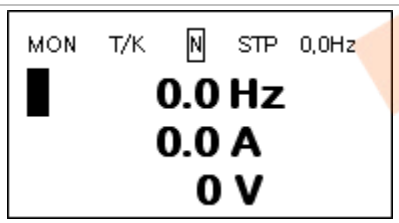	• Monitor mode is displayed again.

3.2.2 Group and Code Selection

Follow the examples below to learn how to switch between groups and codes.

3.2.2.1 0.4-22kW Models

Step	Instruction	Keypad Display
1	Move to the group you want using the [◀] and [▶] keys.	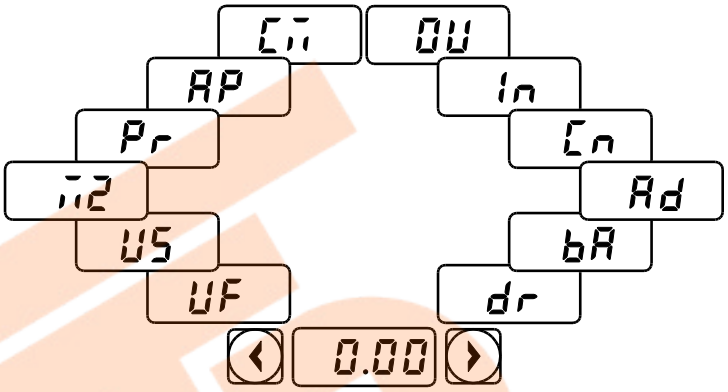
2	Move up and down through the codes using the [▲] and [▼] keys until you locate the code that you require.	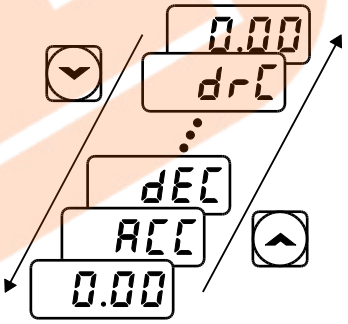
3	Press the [ENT] key to save the change.	-

Note

For some settings, pressing the [▲] or [▼] key will not increase or decrease the code number by 1. Code numbers may be skipped and not be displayed. This is because certain code numbers have been intentionally left blank (or reserved) for new functions to be added in the future. Also some features may have been hidden (disabled) because a certain code has been set to disable the functions for relevant codes.

As an example, if Ad.24 (Frequency Limit) is set to 0 (No), the next codes, Ad.25 (Freq Limit Lo) and Ad.26 (Freq Limit Hi), will not be displayed. If you set code Ad.24 to 1 (Yes) and enable the frequency limit feature, codes Ad.25 and 26 will appear to allow the maximum and minimum frequency limitations to be set up.

3.2.2.2 30-75kW Models (Switching Groups)

Press the [MODE] key to display a specific mode. Modes displayed change in the following order:

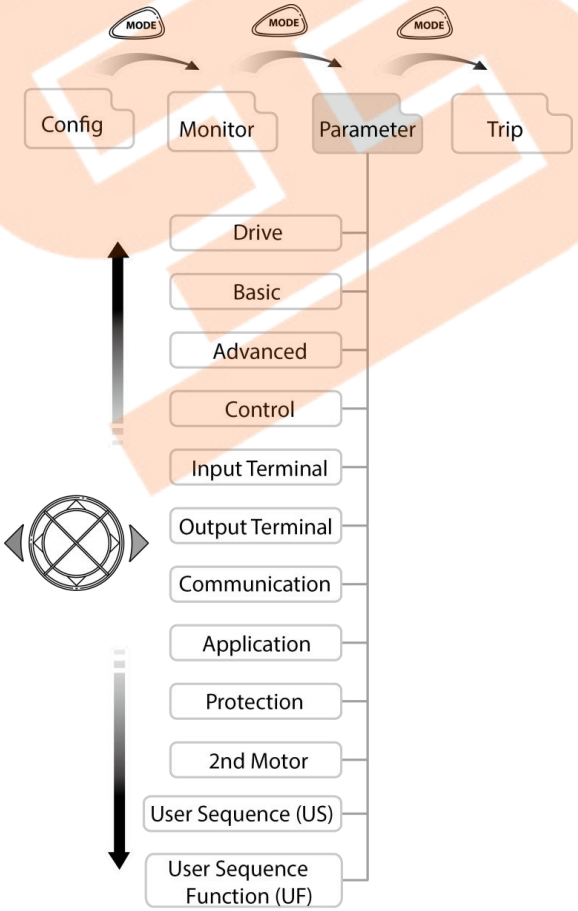

Switching between Groups in Parameter Display Mode

After entering Parameter mode from Monitor mode, press the [▶] key to change the display as shown below. Press the [◀] key to return to the previous mode.

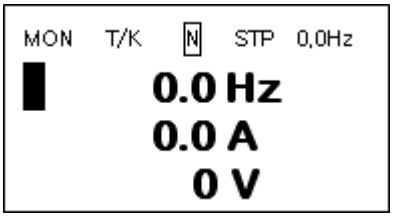	• When the power is turned on, Monitor mode is displayed. • Press the [MODE] key.
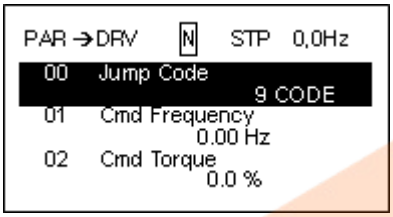	• Parameter mode • Drive group is displayed. • Press the [▶] key.
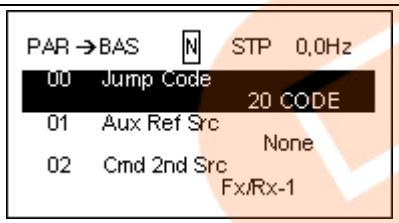	• Basic group (BAS) • Press the [▶] key.
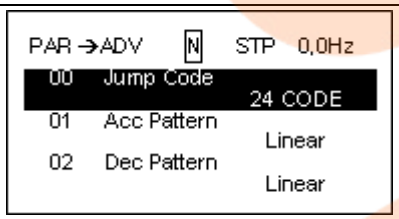	• Advanced group (ADV) • Press the [▶] key seven times.
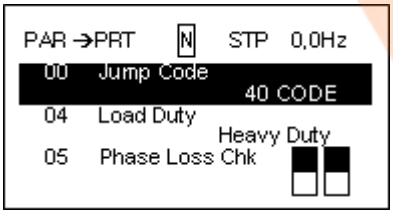	• Protection group (PRT) • Press the [▶] key.
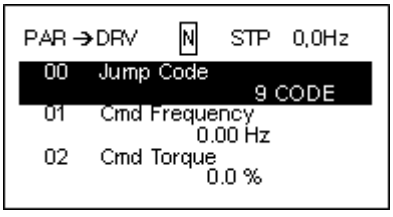	• Parameter mode Drive group (DRV) is displayed again.

3.2.2.3 30-75kW Models (Code Navigation)

Code Navigation in Monitor mode

In monitor mode, press the [▲], [▼] key to display frequency, the output current, or voltage according to the cursor position.

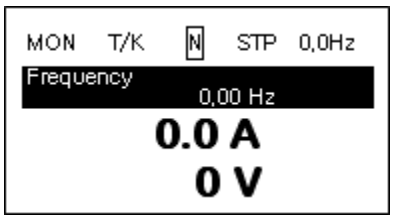	• When the power is turned on, Monitor mode is displayed. • The cursor appears to the left of the frequency information. • Press the [▼] key.
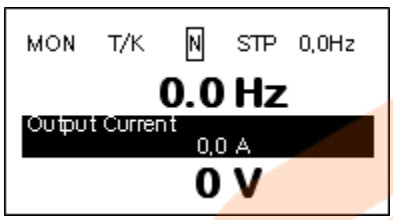	• Information about the second item in Monitor mode (Output Current) is displayed. • Wait for 2 seconds until the information on the display disappears.
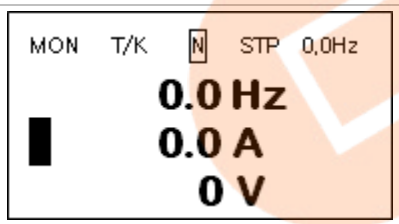	• Information about the second item in Monitor mode (Output Current) disappears and the cursor reappears to the left of the second item. • Press the [▼] key.
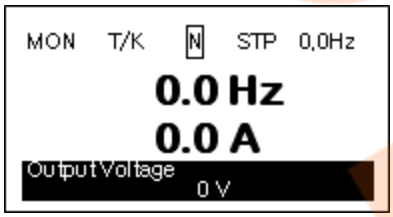	• Information about the third item in Monitor mode (Output Voltage) is displayed. • Wait for 2 seconds until the information on the display disappears.
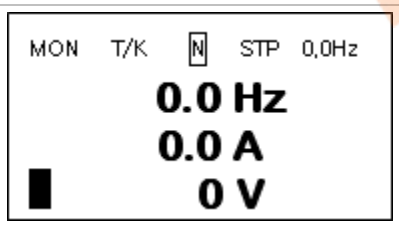	• Information about the third item in Monitor mode (Output Voltage) disappears and the cursor appears to the left of the third item. • Press the [▼] key twice.
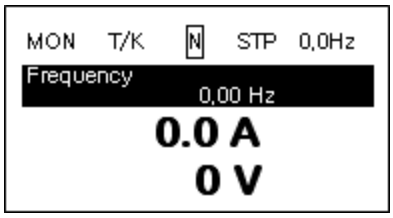	• Information about the first item in Monitor mode (Frequency) is displayed.

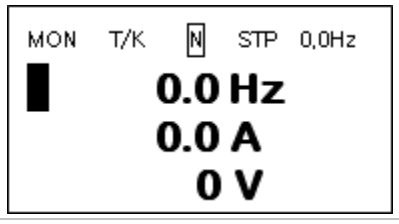	• Information about the first item in Monitor mode (Frequency) disappears and the cursor appears to the left of the first item.

Code Navigation in Parameter mode

The following examples show you how to move through codes in different function groups (Drive group and Basic group) in Parameter mode. In parameter mode, press the [▲] or [▼] key to move to the desired functions.

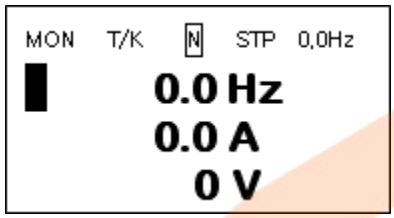	• When the power is on, monitor mode is displayed. • Press the [MODE] key.
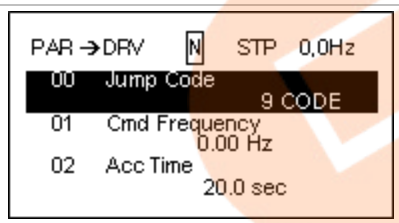	• Drive group (DRV) in Parameter mode is displayed. If any other group is displayed, press the [MODE] key until the Drive group is displayed, or press the [ESC] key.
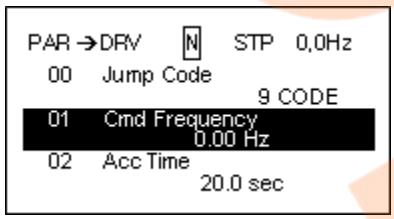	• Press the [▼] key to move to the second code (DRV-01) of Drive group. • Press the [▶] key
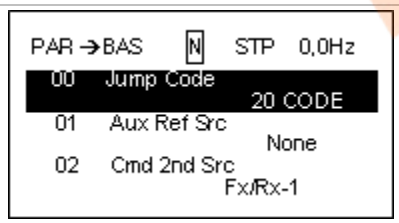	• Basic group is displayed. • Press the [▲] or [▼] key to move to the desired codes and configure the inverter functions.

3.2.3 Navigating Directly to Different Codes

3.2.3.1 0.4-22kW Models

The following example details navigating to code dr. 95, from the initial code in the Drive group (dr. 0). This example applies to all groups whenever you would like to navigate to a specific code number.

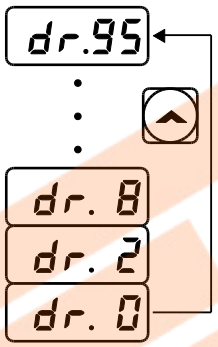

Step	Instruction	Keypad Display
1	Ensure that you are currently at the first code of the Drive group (dr.0).	dr.0
2	Press the [ENT] key. Number '9' will flash.	9
3	Press the [▼] key to display '5,' the first 1s' place of the group destination, '95.'	5
4	Press the [◀] key to move to the 10s' place. The cursor will move to the left and '05' will be displayed. This time, the number '0' will be flashing.	05
5	Press the [▲] key to increase the number from '0' to '9,' the 10s place digit of the destination, '95.'	95
6	Press the [ENT] key. Code dr.95 is displayed.	dr.95

3.2.3.2 30-75kW Models

Parameter mode and Config mode allow direct jumps to specific codes. The code used for this feature is called the Jump Code. The Jump Code is the first code of each mode. The Jump Code feature is convenient when navigating for a code in a function group that has many codes.

The following example shows how to navigate directly to code DRV- 09 from the initial code (DRV-00 Jump Code) in the Drive group.

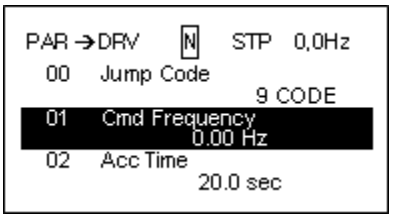	• The Drive group (DRV) is displayed in Parameter mode. Make sure that the fist code in the Drive group (DRV 00 Jump Code) is currently selected. • Press the [PROG/ENT] key.
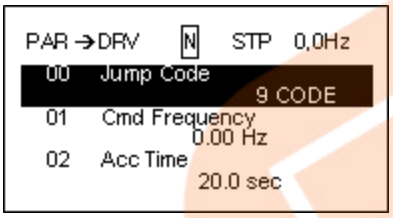	• The Code input screen is displayed and the cursor flashes. A flashing cursor indicates that it is waiting for user input.
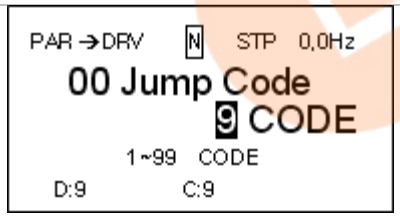	• Press the [▲] key to increase the number to 9, and then press the [PROG/ENT] key.
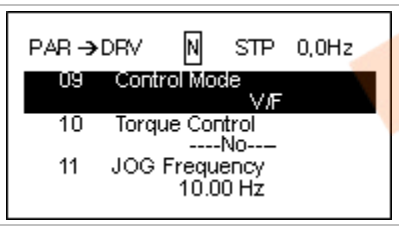	• DRV-09 (Control Mode) is displayed.
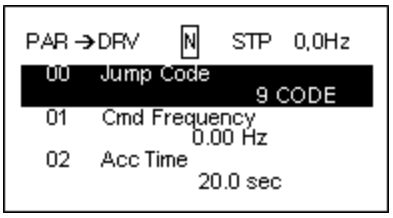	• Press the [ESC] key to go back to the initial code of the Drive group.

3.2.4 Setting Parameter Values

3.2.4.1 0.4-22kW Models

Enable or disable features by setting or modifying parameter values for different codes. Directly enter setting values, such as frequency references, supply voltages, and motor speeds. Follow the instructions below to learn to set or modify parameter values.

Step	Instruction	Keypad Display
1	Select the group and code to setup or modify parameter settings, and then press the [ENT] key. The first number on the right side of the display will flash.	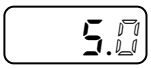
2	Press the [◀] or [▶] key to move the cursor to the number that you would like to modify.	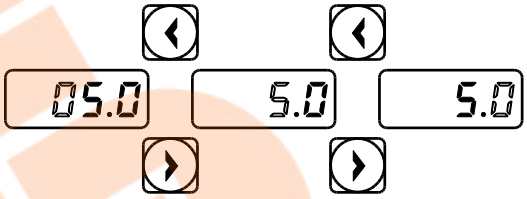
3	Press the [▲] or [▼] key to adjust the value, and then press the [ENT] key to confirm it. The selected value will flash on the display.	
4	Press the [ENT] key again to save the change.	-

Note

- A flashing number on the display indicates that the keypad is waiting for an input from the user. Changes will be saved when the [ENT] key is pressed while the number is flashing. The setting change will be canceled if you press any other key.
- Each code's parameter values have default features and ranges specified. Refer to *8 Table of Functions* on page *307* for information about the features and ranges before setting or modifying parameter values.

3.2.4.2 30-75kW Models

Parameter settings available in Monitor mode

The S100 inverter allows basic parameters to be modified in Monitor mode. The following example shows how to set the frequency.

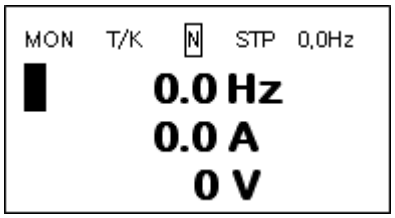	• Make sure that the cursor is at the frequency reference item and that the frequency setting is set to 'Keypad' in DRV-09. • Press the [PROG/ENT] key.
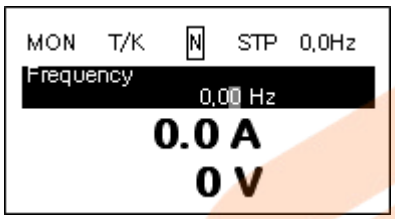	• When the cursor is on the frequency reference item, detailed information is displayed and the cursor flashes on the input line. • Press the shift key to go to the desired frequency.
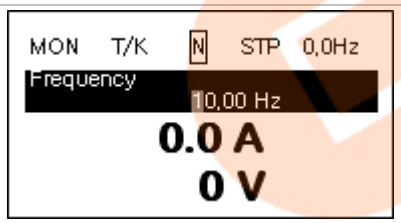	• Press the [▲] key to set the frequency to 10 Hz. • Press the [PROG/ENT] key.
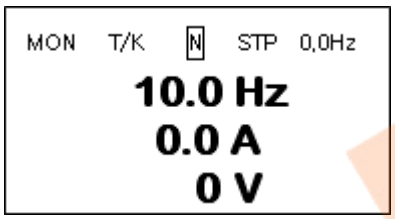	• The frequency is set to 10 Hz.

Parameter settings in other modes and groups

The following example shows how to change the frequency in the Drive group. This example can also be applied to other modes and groups.

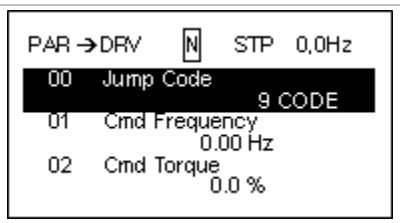	• This is the initial display for Parameter mode. • Press the [▼] key.
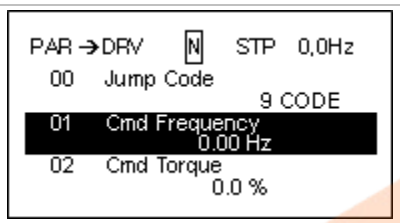	• DRV-01 code is selected. • Press the [PROG/ENT] key.
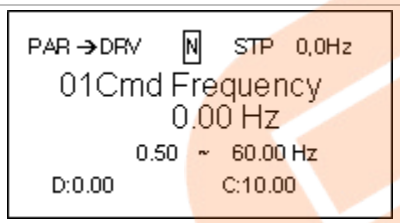	• The frequency can be changed at the flashing digit. • Press the [◀]/ [▶] key to move the cursor to the desired digit.
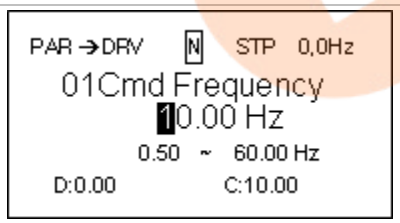	• Press the [▲] key to enter 10 Hz, and then press the [PROG/ENT] key.
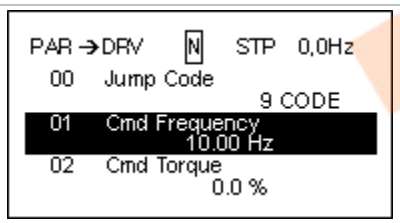	• The frequency is changed to 10 Hz.

3.2.5 Configuring the [ESC] Key (0.4-22kW models only)

The [ESC] key is a multi-functional key that can be configured to carry out a number of different functions. Refer to *4.6 Local/Remote Mode Switching* on page *120* for more information about the other functions of the [ESC] key. The following example shows how to configure the [ESC] key to perform a jog operation.

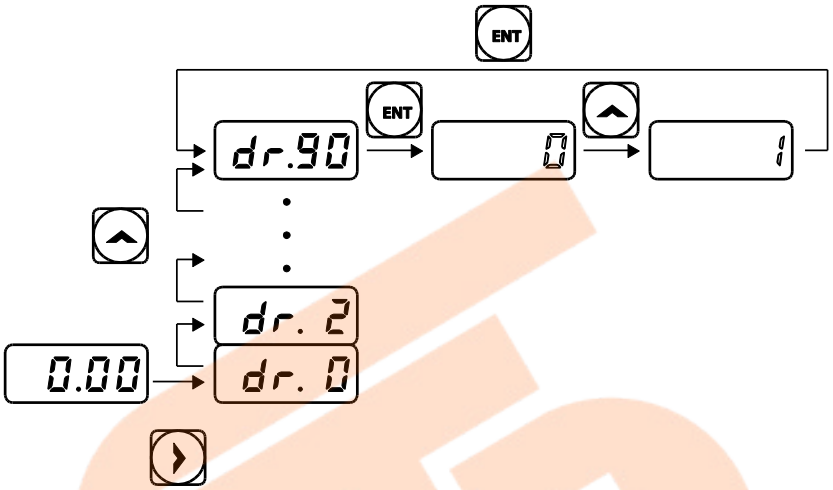

Step	Instruction	Keypad Display
1	Ensure that you are currently at the first code of the Operation group, and that code 0.00 (Command Frequency) is displayed.	0.00
2	Press the [▶] key. You have moved to the initial code of the Drive group (dr.0).	dr.0
3	Press the [▲] or [▼] key to select code 90 (ESC key configuration), and then press the [ENT] key. Code dr.90 currently has an initial parameter value of, 0 (adjust to the initial position).	dr.90 0
4	Press the [▲] key to modify the value to 1 (Jog key) and then press the [ENT] key. The new parameter value will flash.	1
5	Press the [ENT] key again to save changes.	-

Note

- If the code dr. 90 (ESC key configuration) is set to 1 (JOG Key) or 2 (Local/Remote), the SET indicator will flash when the [ESC] key is pressed.
- The factory default setting for code dr. 90 is 0 (move to the initial position). You can navigate back to the initial position (code 0.00 of the Operation group) immediately, by pressing the [ESC] key while configuring any codes in any groups.

3.3 Actual Application Examples

3.3.1 Acceleration Time Configuration (0.4-22kW models only)

The following is an example demonstrating how to modify the ACC (Acceleration time) code value (from 5.0 to 16.0) from the Operation group.

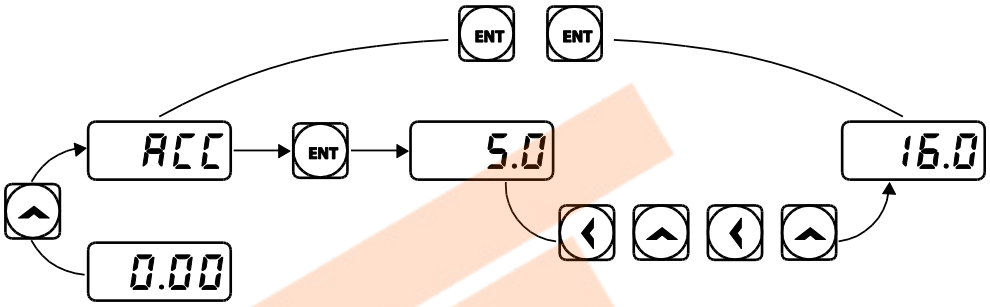

Step	Instruction	Keypad Display
1	Ensure that the first code of the Operation group is selected, and code 0.00 (Command Frequency) is displayed.	0.00
2	Press the [▲] key. The display will change to the second code in the Operation group, the ACC (Acceleration Time) code.	ACC
3	Press the [ENT] key. The number '5.0' will be displayed, with '0' flashing. This indicates that the current acceleration time is set to 5.0 seconds. The flashing value is ready to be modified by using the keypad.	5.0
4	Press the [◀] key to change the first place value. '5' will be flashing now. This indicates the flashing value, '5' is ready to be modified.	5.0
5	Press the [▲] key to change the number '5' into '6', the first place value of the target number '16.'	6.0
6	Press the [◀] key to move to the 10s, place value. The number in the 10s position, '0' in '06' will start to flash	06.0
7	Press the [▲] key to change the number from '0' to '1', to match the 10s place value of the target number'16,' and then press the [ENT] key. Both digits will flash on the display.	16.0
8	Press the [ENT] key once again to save changes. 'ACC' will be displayed. The change to the acceleration time setup has been completed.	ACC

3.3.2 Frequency Reference Configuration (0.4-22kW models only)

The following is an example to demonstrate configuring a frequency reference of 30.05 (Hz) from the first code in the Operation group (0.00).



Step	Instruction	Keypad Display
1	Ensure that the first code of the Operation group is selected, and the code 0.00 (Command Frequency) is displayed.	0.00
2	Press the [ENT] key. The value, 0.00 will be displayed with the '0' in the 1/100s place value flashing.	0.00
3	Press the [◀] key 3 times to move to the 10s place value. The '0' at the 10s place value will start to flash.	00.00
4	Press the [▲] key to change it to '3,' the 10s place value of the target frequency, '30.05.'	30.00
5	Press the [▶] key 3 times. The '0' at the 1/100s place position will flash.	30.00
6	Press the [▲] key to change it to '5,' the 1/100 place value of the target frequency, '30.05,' and then press the [ENT] key. The parameter value will flash on the display.	30.05
7	Press the [ENT] key once again to save changes. Flashing stops. The frequency reference has been configured to 30.05 Hz.	30.05

Note

- A flashing number on the display indicates that the keypad is waiting for an input from the user. Changes are saved when the [ENT] key is pressed while the value is flashing. Changes will be canceled if any other key is pressed.
- The S100 inverter keypad display can display up to 4 digits. However, 5-digit figures can be used and are accessed by pressing the [◀] or [▶] key, to allow keypad input.

3.3.3 Jog Frequency Configuration (0.4-22kW models only)

The following example demonstrates how to configure Jog Frequency by modifying code 11 in the Drive group (Jog Frequency) from 10.00(Hz) to 20.00(Hz). You can configure the parameters for different codes in any other group in exactly the same way.

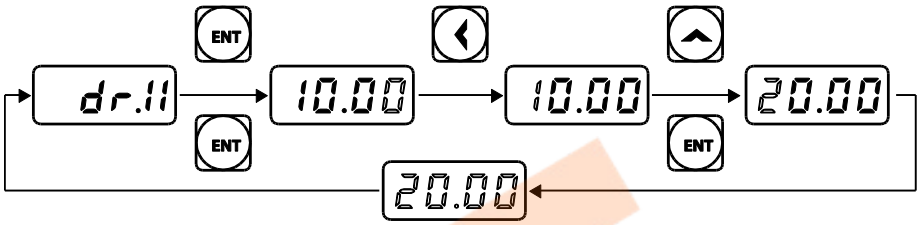

Step	Instruction	Keypad Display
1	Go to code 11(Jog Frequency) in the Drive group.	dr.11
2	Press the [ENT] key. The current Jog Frequency value (10.00) for code dr.11 is displayed.	10.00
3	Press the [◀] key 3 times to move to the 10s place value. Number '1' at the 10s place position will flash.	10.00
4	Press the [▲] key to change the value to '2,' to match the 10s place value of the target value'20.00,' and then press the [ENT] key. All parameter digits will flash on the display.	20.00
5	Press the [ENT] key once again to save the changes. Code dr.11 will be displayed. The parameter change has been completed.	dr.11

3.3.4 Initializing All Parameters

3.3.4.1 0.4-22kW Models

The following example demonstrates parameter initialization using code dr.93 (Parameter Initialization) in the Drive group. Once executed, parameter initialization will delete all modified values for all codes and groups.

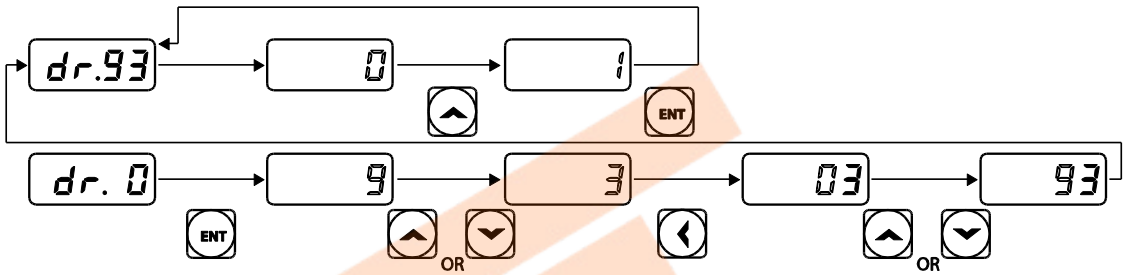

Step	Instruction	Keypad Display
1	Go to code 0 (Jog Frequency) in the Drive group.	dr.0
2	Press the [ENT] key. The current parameter value (9) will be displayed.	9
3	Press the [q] key to change the first place value to '3' of the target code, '93.'	3
4	Press the [◀] key to move to the 10s place position. '03' will be displayed.	03
5	Press the [▲] or [▼] key to change the '0' to '9' of the target code, '93.'	93
6	Press the [ENT] key. Code dr.93 will be displayed.	dr.93
7	Press the [ENT] key once again. The current parameter value for code dr.93 is set to 0 (Do not initialize).	0
8	Press the [▲] key to change the value to 1 (All Grp), and then press the [ENT] key. The parameter value will flash.	1
9	Press the [ENT] key once again. Parameter initialization begins. Parameter initialization is complete when code dr.93 reappears on the display.	dr.93

Note

Following parameter initialization, all parameters are reset to factory default values. Ensure that parameters are reconfigured before running the inverter again after an initialization.

3.3.4.2 30-75kW Models

The following example demonstrates how to revert all the parameter settings back to the factory default (Parameter Initialization). Parameter initialization may be performed for separate groups in Parameter mode as well.

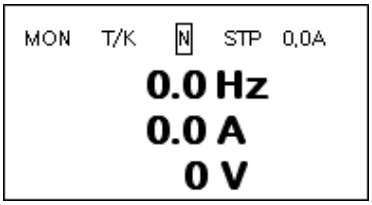	• Monitor mode is displayed.
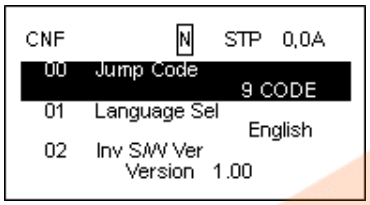	• Press the [MODE] key to move to the Config (CNF) mode.
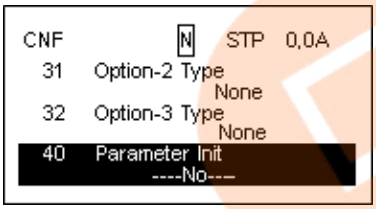	• Press the [▼] key to go to CNF-40 (Parameter Init). • Press the [PROG/ENT] key.
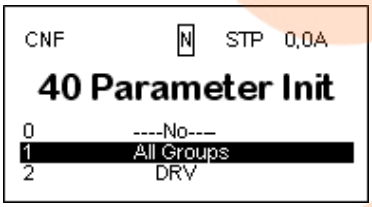	• In the list of options, select All Groups, and then press the [PROG/ENT] key.
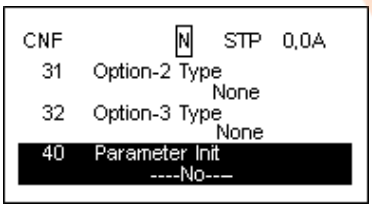	• The parameter initialization option is displayed again when the initialization is complete.

3.3.5 Frequency Setting (Keypad) and Operation (via Terminal Input)

Step	Instruction	Keypad Display
1	Turn on the inverter.	-
2	Ensure that the first code of the Operation group is selected, and code 0.00 (Command Frequency) is displayed, then press the [ENT] key. The first digit on the right will flash.	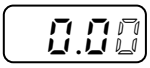
3	Press the [◀] key 3 times to go to the 10s place position. The number '0' at the 10s place position will flash.	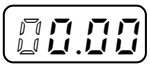
4	Press the [▲] key to change it to 1, and then press the [ENT] key. The parameter value (10.00) will flash.	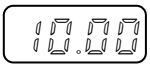
5	Press the [ENT] key once again to save changes. A change of reference frequency to 10.00 Hz has been completed.	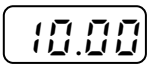
6	Refer to the wiring diagram at the bottom of the table, and close the switch between the P1 (FX) and CM terminals. The RUN indicator light flashes and the FWD indicator light comes on steady. The current acceleration frequency is displayed.	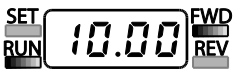
7	When the frequency reference is reached (10Hz), open the switch between the P1 (FX) and CM terminals. The RUN indicator light flashes again and the current deceleration frequency is displayed. When the frequency reaches 0Hz, the RUN and FWD indicator lights turn off, and the frequency reference (10.00Hz) is displayed again.	

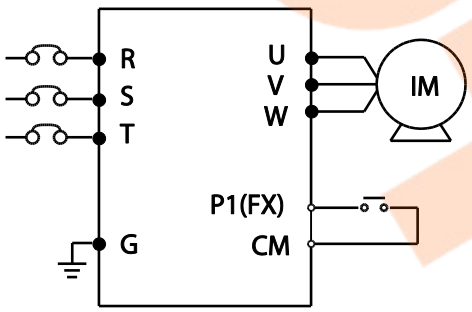

[Wiring Diagram]

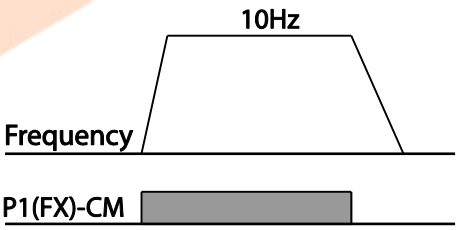

[Operation Pattern]

Note

The instructions in the table are based on the factory default parameter settings. The inverter may not work correctly if the default parameter settings are changed after the inverter is purchased. In such cases, initialize all parameters to reset the values to factory default parameter settings before following the instructions in the table (refer to *5.23 Parameter Initialization* on page *224*).

3.3.6 Frequency Setting (Potentiometer) and Operation (Terminal Input)

Step	Instruction	Keypad Display
1	Turn on the inverter.	-
2	Ensure that the first code of the Operation group is selected, and the code 0.00 (Command Frequency) is displayed.	
3	Press the [▲] key 4 times to go to the Frq (Frequency reference source) code.	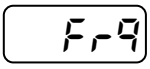
4	Press the [ENT] key. The Frq code in the Operation group is currently set to 0 (keypad).	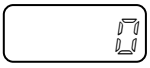
5	Press the [▲] key to change the parameter value to 2 (Potentiometer), and then press the [ENT] key. The new parameter value will flash.	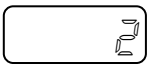
6	Press the [ENT] key once again. The Frq code will be displayed again. The frequency input has been configured for the potentiometer.	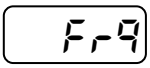
7	Press the [▼] key 4 times. Returns to the first code of the Operation group (0.00).From here frequency setting values can be monitored.	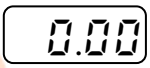
8	Adjust the potentiometer to increase or decrease the frequency reference to 10Hz.	-
9	Refer to the wiring diagram at the bottom of the table, and close the switch between the P1 (FX) and CM terminals. The RUN indicator light flashes and the FWD indicator light comes on steady. The current acceleration frequency is displayed.	
10	When the frequency reference is reached (10Hz), open the switch between the P1 (FX) and CM terminals. The RUN indicator light flashes again and the current deceleration frequency is displayed. When the frequency reaches 0Hz, the RUN and FWD indicators turn off, and the frequency reference (10.00Hz) is displayed again.	

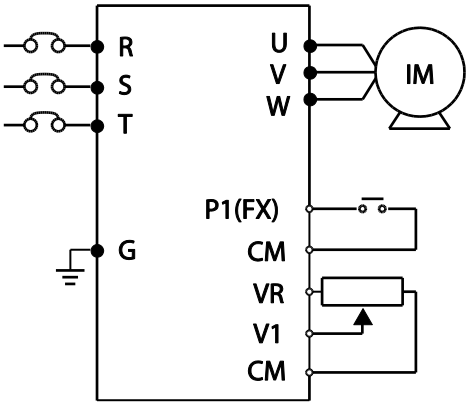

[Wiring Diagram]

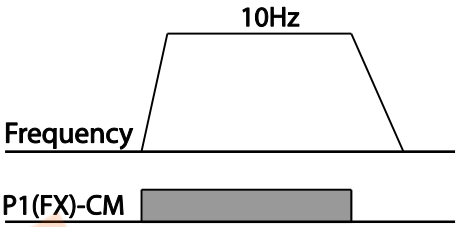

[Operation Pattern]

Note

The instructions in the table are based on the factory default parameter settings. The inverter may not work correctly if the default parameter settings are changed after the inverter is purchased. In such cases, initialize all parameters to reset the factory default parameter settings before following the instructions in the table (refer to *5.23 Parameter Initialization* on page *224*).

3.3.7 Frequency Setting (Potentiometer) and Operation (Keypad)

Step	Instruction	Keypad Display
1	Turn on the inverter.	-
2	Ensure that the first code of the Operation group is selected, and the code 0.00 (Command Frequency) is displayed.	0.00
3	Press the [▲] key 4 times to go to the drv code.	drv
4	Press the [ENT] key. The drv code in the Operation group is currently set to 1 (Analog Terminal).	1
5	Press the [▼] key to change the parameter value to 0 (Keypad), and then press the [ENT] key. The new parameter value will flash.	0
6	Press the [ENT] key once again. The drv code is displayed again. The frequency input has been configured for the keypad.	drv
7	Press the [▲] key. To move to the Frq (Frequency reference source) code.	Frq

Step	Instruction	Keypad Display
8	Press the [ENT] key. The Frq code in the Operation group is set to 0 (Keypad).	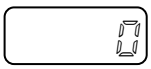
9	Press the [▲] key to change it to 2 (Potentiometer), and then press the [ENT] key. The new parameter value will flash.	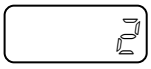
10	Press the [ENT] key once again. The Frq code is displayed again. The frequency input has been configured for potentiometer.	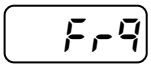
11	Press the [▼] key 4 times. Returns to the first code of the Operation group (0.00). From here frequency setting values can be monitored.	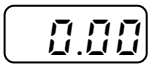
12	Adjust the potentiometer to increase or decrease the frequency reference to 10Hz.	-
13	Press the [RUN] key on the keypad. The RUN indicator light flashes and the FWD indicator light comes on steady. The current acceleration frequency is displayed.	
14	When the frequency reaches the reference (10Hz), press the [STOP/RESET] key on the keypad. The RUN indicator light flashes again and the current deceleration frequency is displayed. When the frequency reaches 0Hz, the RUN and FWD indicator lights turn off, and the frequency reference (10.00Hz) is displayed again.	

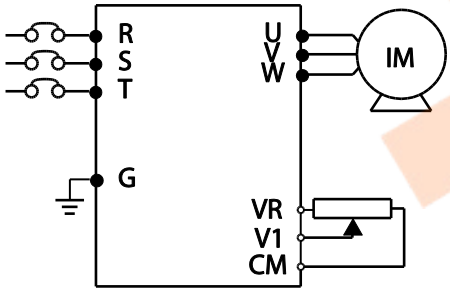

[Wiring Diagram]

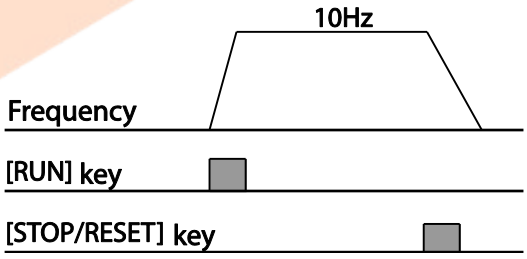

[Operation Pattern]

Note

The instructions in the table are based on the factory default parameter settings. The inverter may not work correctly if the default parameter settings are changed after the inverter is purchased. In such cases, initialize all parameters to reset the factory default parameter settings before following the instructions in the table (refer to *5.23 Parameter Initialization* on page *224*).

3.4 Monitoring the Operation

3.4.1 0.4-22kW Models

3.4.1.1 Output Current Monitoring

The following example demonstrates how to monitor the output current in the Operation group using the keypad.

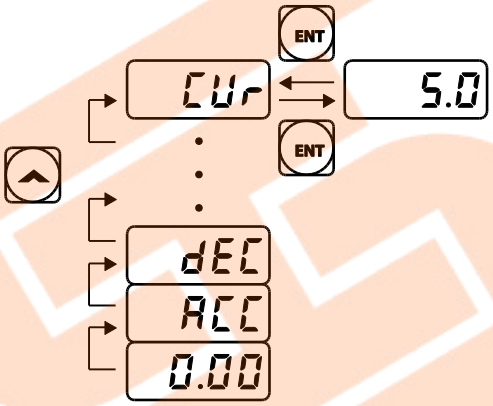

Step	Instruction	Keypad Display
1	Ensure that the first code of the Operation group is selected, and the code 0.00 (Command Frequency) is displayed.	0.00
2	Press the [▲] or [▼] key to move to the Cur code.	CUr
3	Press the [ENT] key. The output current (5.0A) is displayed.	5.0
4	Press the [ENT] key again. Returns to the Cur code.	CUr

Note

You can use the dCL (DC link voltage monitor) and vOL (output voltage monitor) codes in the Operation group in exactly the same way as shown in the example above, to monitor each function's relevant values.

3.4.1.2 Fault Trip Monitoring

The following example demonstrates how to monitor fault trip conditions in the Operation group using the keypad.

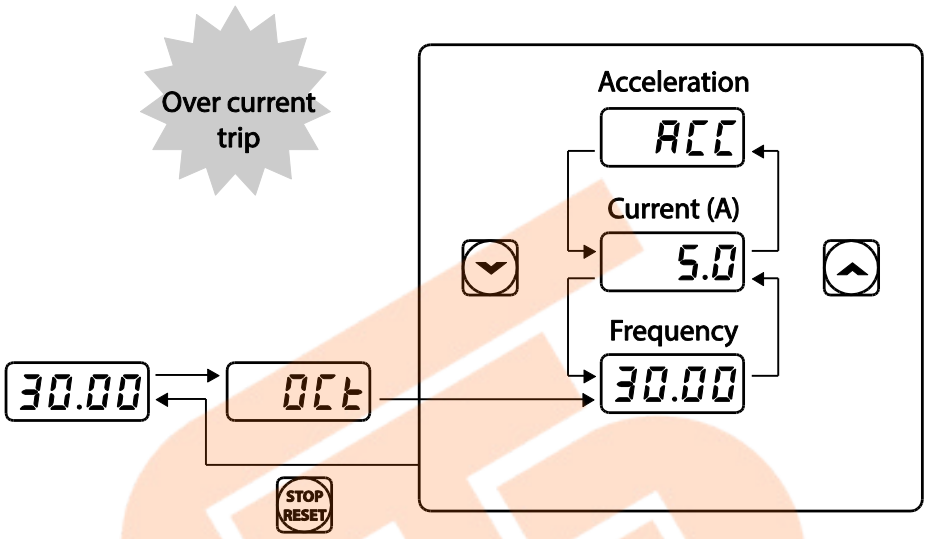

Step	Instruction	Keypad Display
1	Refer to the example keypad display. An over current trip fault has occurred.	OCt
2	Press the [ENT] key, and then the [▲] key. The operation frequency at the time of the fault (30.00Hz) is displayed.	30.00
3	Press the [▲] key. The output current at the time of the fault (5.0A) is displayed.	5.0
4	Press the [▲] key. The operation status at the time of the fault is displayed. ACC on the display indicates that the fault occurred during acceleration.	ACC
5	Press the [STOP/RESET] key. The inverter resets and the fault condition is cleared. The frequency reference is displayed on the keypad.	30.00

Note

- If multiple fault trips occur at the same time, a maximum of 3 fault trip records can be retrieved as shown in the following example.

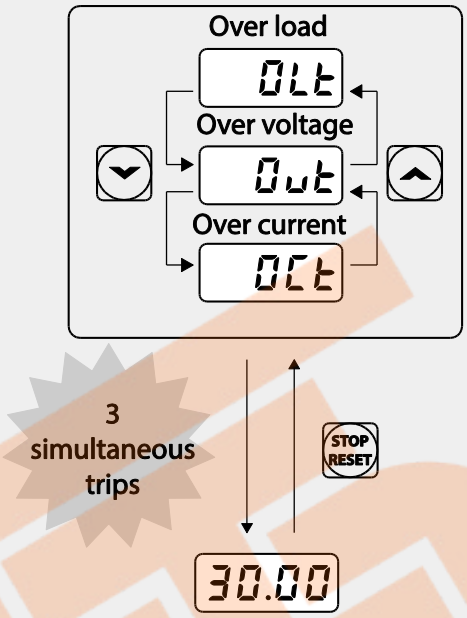

- If a warning condition occurs while running at a specified frequency, the current frequency and the UAr n signal will be displayed alternately, at 1 second intervals. Refer to *6.3 Under load Fault Trip and Warning* on page *269* for more details.

3.4.2 30-75kW Models

How to use Monitor mode

There are 3 types of items that may be monitored in Monitor mode. Some items, including frequency, may be modified. Users can select the items to be displayed in Config mode (CNF).

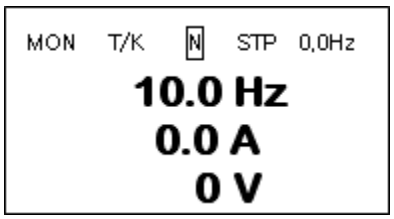	• Monitor mode • Frequency, current, and voltage are set as the default monitored items. • The target frequency is displayed when the inverter is stopped. The operation frequency is displayed while operating.
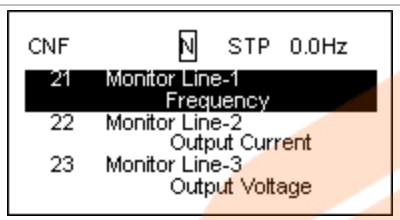	• Configure the items to be displayed in Config mode (CNF) 21~23. • Press the [▼] key to go to 23.
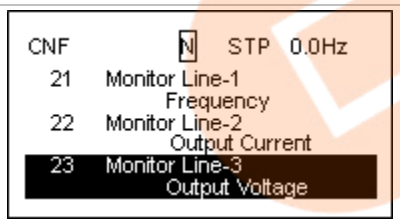	• Press the[PROG/ENT] key to change 23 to output power.
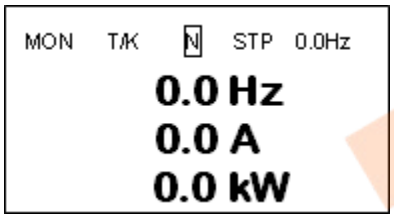	• Press the[ESC] key to ensure that the third item in Monitor mode is changed to output power.

Items available for monitoring

Mode	Number	Display	Setting Range		Initial value
CNF	20	Anytime Para	0	Frequency	0: Frequency
	21	Monitor Line-1	1	Speed	0: Frequency
	22	Monitor Line-2	2	Output Current	2:Output Current
	23	Monitor Line-3	3	Output Voltage	3:Output Voltage
			4	Output Power	
			5	WHour Counter	
			6	DCLink Voltage	
			7	DI State	
			8	DO State	
			9	V1 Monitor[V]	
			10	V1 Monitor[%]	
			13	V2 Monitor[V]	
			14	V2 Monitor[%]	
			15	I2 Monitor[mA]	
			16	I2 Monitor[%]	
			17	PID Output	
			18	PID ref Value	
			19	PID Fbk Value	
			20	Torque	
			21	Torque Limit	
			22	Trq Bias Ref	
			23	Speed Limit	

How to use the status bar

On the top-right corner of the display, there is a display item. This item is displayed as long as the inverter is on, regardless of the mode the inverter is operating in.

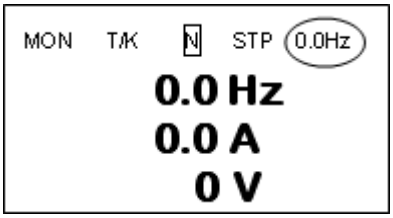	• Monitor mode • In the top-right corner of the display, the frequency reference is displayed (factory default).
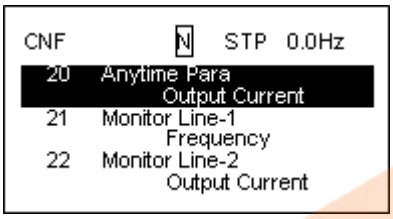	• Enter Config mode and go to CNF-20 to select the item to display. • Press the [PROG/ENT] key to change the item to 'Output Current.' • On the top-right corner of the display, the unit changes from 'Frequency' to 'Current.'
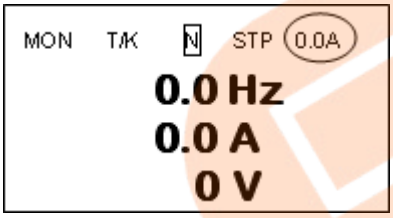	• In monitor mode, the status bar item is changes to 'Current.'

Monitoring Faults during Inverter Operation

The following example shows how to monitor faults that occurred during inverter operation.

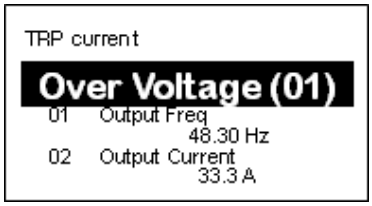	• If a fault trip occurs during inverter operation, the inverter enters Trip mode automatically and displays the type of fault trip that occurred.
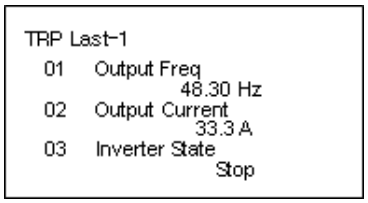	• Press the [▼] key to view the information on the inverter at the time of fault, including the output frequency, output current, and operation type.
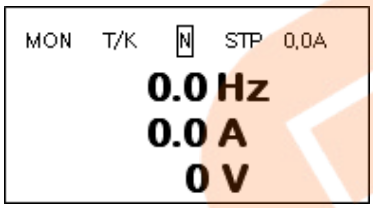	• When the inverter is reset and the fault trip is released, the keypad display returns to the screen it was at when the fault trip occurred.

Monitoring Multiple Fault Trips

The following example shows how to monitor multiple faults that occur at the same time.

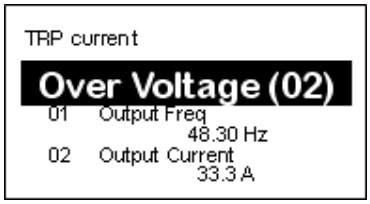	• If multiple fault trips occur at the same time, the number of fault trips occurred is displayed on the right side of the fault trip type. • Press the [PROG/ENT] key.
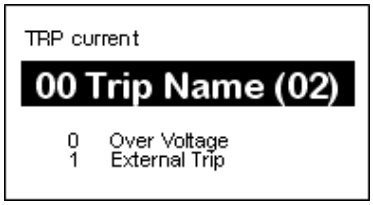	• The types of fault trips that occurred are displayed. • Press the [PROG/ENT] key.
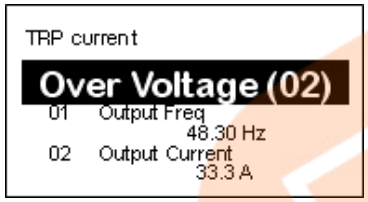	• The display returns to the screen it was at when the fault trip occurred.

Fault trip history saving and monitoring

When fault trips occur, the trip mode saves the content. Up to five fault trips are saved in the history. Trip mode saves when the inverter is reset, and when a Low Voltage fault trip occurs due to power outages. If a trip occurs more than five times, the information for the five previous trips are automatically deleted.

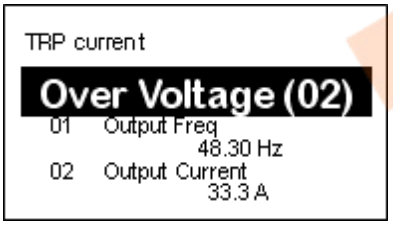	• If a fault trip occurs during inverter operation, the inverter enters Trip mode automatically and displays the type of fault trip that occurred.
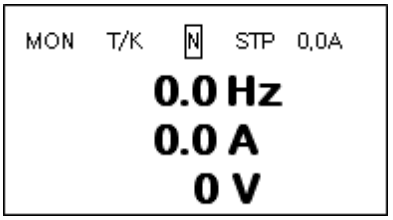	• After the [RESET] key or terminal is pressed, the fault trip is saved automatically and returns to the screen it was on before the fault trip occurred. • Press the [MODE] key toenterTrip mode.

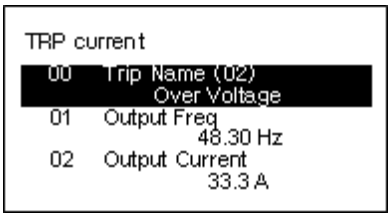	• The most recent fault trip is saved in Last-1 code. • Press the [▶] key.
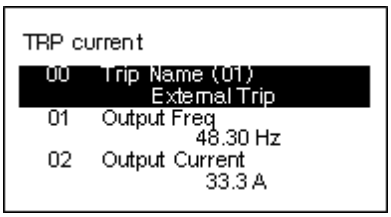	• The fault trip changes position and is saved in Last-2 code. • When a fault trip occurs again, the content in Last-2 is moved to Last-3.

4 Learning Basic Features

This chapter describes the basic features of the S100 inverter. Parameter groups and codes are described based on 0.4-22kW models. For 30-75kW models, refer to *3.1.5 Control Menu* on page *64* Check the reference page in the table to see the detailed description for each of the advanced features.

Basic Tasks	Description	Ref.
Frequency reference source configuration for the keypad	Configures the inverter to allow you to setup or modify frequency reference using the Keypad.	*p.102*
Frequency reference source configuration for the terminal block (input voltage)	Configures the inverter to allow input voltages at the terminal block (V1, V2) and to setup or modify a frequency reference.	*p.103*, *p.110*
Frequency reference source configuration for the terminal block (input current)	Configures the inverter to allow input currents at the terminal block (I2) and to setup or modify a frequency reference.	*p.109*
Frequency reference source configuration for the terminal block (input pulse)	Configures the inverter to allow input pulse at the terminal block (TI) and to setup or modify a frequency reference.	*p.111*
Frequency reference source configuration for RS-485 communication	Configures the inverter to allow communication signals from upper level controllers, such as PLCs or PCs, and to setup or modify a frequency reference.	*p.113*
Frequency control using analog inputs	Enables the user to hold a frequency using analog inputs at terminals.	*p.114*
Motor operation display options	Configures the display of motor operation values. Motor operation is displayed either in frequency (Hz) or speed (rpm).	*p.115*
Multi-step speed (frequency) configuration	Configures multi-step frequency operations by receiving an input at the terminals defined for each step frequency.	*p.115*
Command source configuration for keypad buttons	Configures the inverter to allow the manual operation of the [FWD], [REV] and [Stop] keys.	*p.117*
Command source configuration for terminal block inputs	Configures the inverter to accept inputs at the FX/RX terminals.	*p.118*
Command source configuration for RS-485 communication	Configures the inverter to accept communication signals from upper level controllers, such as PLCs or PCs.	*p.120*
Local/remote switching via the [ESC] key	Configures the inverter to switch between local and remote operation modes when the [ESC] key is pressed. When the inverter is operated using remote inputs (any input other than one from the keypad), this configuration can be used to perform maintenance on the inverter,	*p.120*

Basic Tasks	Description	Ref.
	without losing or altering saved parameter settings. It can also be used to override remotes and use the keypad immediately in emergencies.	
Motor rotation control	Configures the inverter to limit a motor's rotation direction.	p.122
Automatic start-up at power-on	Configures the inverter to start operating at power-on. With this configuration, the inverter begins to run and the motor accelerates as soon as power is supplied to the inverter. To use automatic start-up configuration, the operation command terminals at the terminal block must be turned on.	p.123
Automatic restart after reset of a fault trip condition	Configures the inverter to start operating when the inverter is reset following a fault trip. In this configuration, the inverter starts to run and the motor accelerates as soon as the inverter is reset following a fault trip condition. For automatic start-up configuration to work, the operation command terminals at the terminal block must be turned on.	p.124
Acc/Dec time configuration based on the Max. Frequency	Configures the acceleration and deceleration times for a motor based on a defined maximum frequency.	p.125
Acc/Dec time configuration based on the frequency reference	Configures acceleration and deceleration times for a motor based on a defined frequency reference.	p.126
Multi-stage Acc/Dec time configuration using the multi-function terminal	Configures multi-stage acceleration and deceleration times for a motor based on defined parameters for the multi-function terminals.	p.127
Acc/Dec time transition speed (frequency) configuration	Enables modification of acceleration and deceleration gradients without configuring the multi-functional terminals.	p.129
Acc/Dec pattern configuration	Enables modification of the acceleration and deceleration gradient patterns. Basic patterns to choose from include linear and S-curve patterns.	p.130
Acc/Dec stop command	Stops the current acceleration or deceleration and controls motor operation at a constant speed. Multi-function terminals must be configured for this command .	p.132
Linear V/F pattern operation	Configures the inverter to run a motor at a constant torque. To maintain the required torque, the operating frequency may vary during operation.	p.132
Square reduction V/F pattern operation	Configures the inverter to run the motor at a square reduction V/F pattern. Fans and pumps are appropriate loads for square reduction V/F operation.	p.133
User V/F pattern configuration	Enables the user to configure a V/F pattern to match the characteristics of a motor. This configuration is for special-purpose motor applications to achieve optimal performance.	p.134
Manual torque boost	Manual configuration of the inverter to produce a momentary torque boost. This configuration is for loads	p.135

Basic Tasks	Description	Ref.
	that require a large amount of starting torque, such as elevators or lifts.	
Automatic torque boost	Automatic configuration of the inverter that provides “auto tuning” that produces a momentary torque boost. This configuration is for loads that require a large amount of starting torque, such as elevators or lifts.	p.136
Output voltage adjustment	Adjusts the output voltage to the motor when the power supply to the inverter differs from the motor’s rated input voltage.	p.136
Accelerating start	Accelerating start is the general way to start motor operation. The typical application configures the motor to accelerate to a target frequency in response to a run command, however there may be other start or acceleration conditions defined.	p.138
Start after DC braking	Configures the inverter to perform DC braking before the motor starts rotating again. This configuration is used when the motor will be rotating before the voltage is supplied from the inverter.	p.138
Deceleration stop	Deceleration stop is the typical method used to stop a motor. The motor decelerates to 0Hz and stops on a stop command, however there may be other stop or deceleration conditions defined.	p.139
Stopping by DC braking	Configures the inverter to apply DC braking during motor deceleration. The frequency at which DC braking occurs must be defined and during deceleration, when the motor reaches the defined frequency, DC braking is applied.	p.139
Free-run stop	Configures the inverter to stop output to the motor using a stop command. The motor will free-run until it slows down and stops.	p.140
Power braking	Configures the inverter to provide optimal, motor deceleration, without tripping over-voltage protection.	p.141
Start/maximum frequency configuration	Configures the frequency reference limits by defining a start frequency and a maximum frequency.	p.142
Upper/lower frequency limit configuration	Configures the frequency reference limits by defining an upper limit and a lower limit.	p.142
Frequency jump	Configures the inverter to avoid running a motor in mechanically resonating frequencies.	p.143
2nd Operation Configuration	Used to configure the 2nd operation mode and switch between the operation modes according to your requirements.	p.144
Multi-function input terminal control configuration	Enables the user to improve the responsiveness of the multi-function input terminals.	p.145
Multi-keypad configuration	Enables the user to monitor multiple inverters with one monitoring device.	p.147
User sequence configuration	Enables the user to implement simple sequences using various function blocks.	p.148

4.1 Setting Frequency Reference

The S100 inverter provides several methods to setup and modify a frequency reference for an operation. The keypad, analog inputs [for example voltage (V1, V2) and current (I2) signals], or RS-485 (digital signals from higher-level controllers, such as PC or PLC) can be used. If UserSeqLink is selected, the common area can be linked with user sequence output and can be used as frequency reference.

Group	Code	Name	LCD Display	Parameter Setting		Setting Range	Unit
Operation	Frq	Frequency reference source	Ref Freq Src	0	KeyPad-1	0-12	-
				1	KeyPad-2		
				2	V1		
				4	V2		
				5	I2		
				6	Int 485		
				8	Field Bus		
				9	UserSeqLink		
				12	Pulse		

4.1.1 Keypad as the Source (KeyPad-1 setting)

You can modify frequency reference by using the keypad and apply changes by pressing the [ENT] key. To use the keypad as a frequency reference input source, go to the Frq (Frequency reference source) code in the Operation group and change the parameter value to 0 (Keypad-1). Input the frequency reference for an operation at the 0.00(Command Frequency) code in the Operation group.)

Group	Code	Name	LCD Display	Parameter Setting		Setting Range	Unit
Operation	Frq	Frequency reference source	Freq Ref Src	0	KeyPad-1	0–12	
	0.00	Frequency reference		0.00		Min to Max Frq*	Hz

* You cannot set a frequency reference that exceeds the Max. Frequency, as configured with dr.20.

4.1.2 Keypad as the Source (KeyPad-2 setting)

You can use the [▲] and [▼] keys to modify a frequency reference. To use this as a second option, set the keypad as the source of the frequency reference, by going to the Frq (Frequency reference source) code in the Operation group and change the parameter value to 1 (Keypad-2). This allows frequency reference values to be increased or decreased by pressing the [▲] and [▼] keys.

Group	Code	Name	LCD Display	Parameter Setting		Setting Range	Unit
Operation	Frq	Frequency reference source	Freq Ref Src	1	KeyPad-2	0–12	-
	0.00	Frequency reference		0.00		Min to Max Frq*	Hz

* You cannot set a frequency reference that exceeds the Max. Frequency, as configured with dr.20.

4.1.3 V1 Terminal as the Source

You can set and modify a frequency reference by setting voltage inputs when using the V1 terminal. Use voltage inputs ranging from 0 to 10V (unipolar) for forward only operation. Use voltage inputs ranging from -10 to +10V (bipolar) for both directions, where negative voltage inputs are used reverse operations.

4.1.3.1 Setting a Frequency Reference for 0–10V Input

Set code 06 (V1 Polarity) to 0 (unipolar) in the Input Terminal group (IN). Use a voltage output from an external source or use the voltage output from the VR terminal to provide inputs to V1. Refer to the diagrams below for the wiring required for each application.

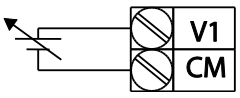

[External source application]

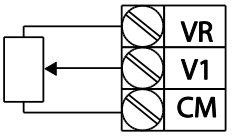

[Internal source (VR) application]

Group	Code	Name	LCD Display	Parameter Setting		Setting Range	Unit
Operation	Frq	Frequency reference source	Freq Ref Src	2	V1	0–12	-
In	01	Frequency at maximum analog input	Freq at 100%	Maximum frequency		0.00–Max. Frequency	Hz
	05	V1 input monitor	V1 Monitor [V]	0.00		0.00–12.00	V
	06	V1 polarity options	V1 Polarity	0	Unipolar	0-1	-
	07	V1 input filter time constant	V1 Filter	10		0–10000	ms
	08	V1 minimum input voltage	V1 volt x1	0.00		0.00–10.00	V
	09	V1 output at minimum voltage (%)	V1 Perc y1	0.00		0.00–100.00	%
	10	V1 maximum input voltage	V1 Volt x2	10.00		0 .00– 12.00	V
	11	V1 output at maximum voltage (%)	V1 Perc y2	100.00		0–100	%
	16	Rotation direction options	V1 Inverting	0	No	0–1	-
	17	V1 Quantizing level	V1 Quantizing	0.04		0.00*, 0.04–10.00	%

* Quantizing is disabled if '0' is selected.

0–10V Input Voltage Setting Details

Code	Description
In.01 Freq at 100%	Configures the frequency reference at the maximum input voltage when a potentiometer is connected to the control terminal block. A frequency set with code In.01 becomes the maximum frequency only if the value set in code In.11 (or In.15) is 100(%). • Set code In.01 to 40.00 and use default values for codes In.02–In.16. Motor will run at 40.00Hz when a 10V input is provided at V1. • Set code In.11 to 50.00and use default values for codes In.01–In.16. Motor will run at 30.00Hz (50% of the default maximum frequency–60Hz) when a 10V input is provided at V1.
In.05 V1 Monitor[V]	Configures the inverter to monitor the input voltage at V1.
In.07 V1 Filter	V1 Filter may be used when there are large variations between reference frequencies. Variations can be mitigated by increasing the time constant, but this will require an increased response time. The value t (time) indicates the time required for the frequency to reach 63% of the reference, when external input voltages are provided in multiple

Code	Description
	steps. 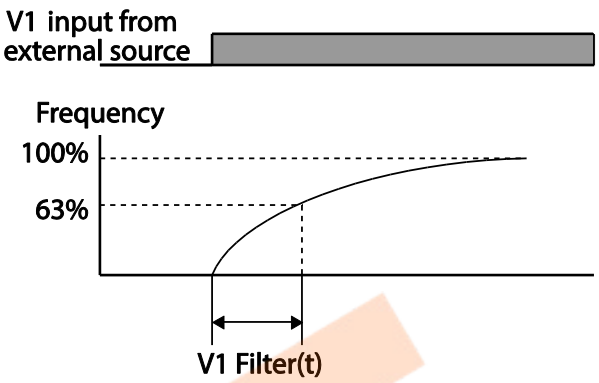 [V1 Filter]
In.08 V1 Volt x1– In.11 V1 Perc y2	These parameters are used to configure the gradient level and offset values of the Output Frequency, based on the Input Voltage. 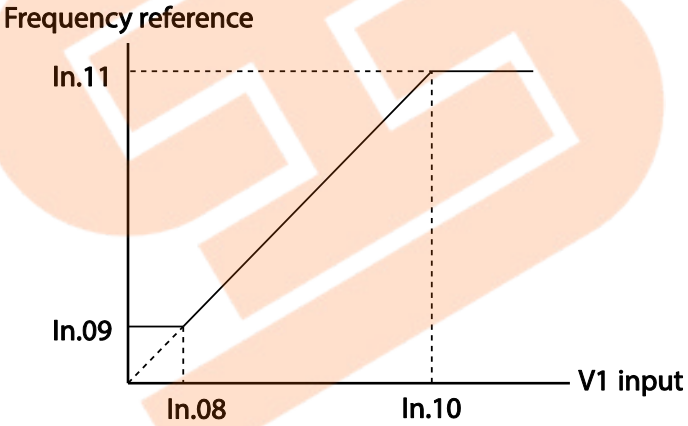 [Volt x1–In.11 V1 Perc y2]
In.16 V1 Inverting	Inverts the direction of rotation. Set this code to 1 (Yes) if you need the motor to run in the opposite direction from the current rotation.
In.17.V1 Quantizing	Quantizing may be used when the noise level is high in the analog input (V1 terminal) signal. Quantizing is useful when you are operating a noise-sensitive system, because it suppresses any signal noise. However, quantizing will diminish system sensitivity (resultant power of the output frequency will decrease based on the analog input). You can also turn on the low-pass filter using code In.07 to reduce the noise, but increasing the value will reduce responsiveness and may cause pulsations (ripples) in the output frequency.

Code	Description
	Parameter values for quantizing refer to a percentage based on the maximum input. Therefore, if the value is set to 1% of the analog maximum input (60Hz), the output frequency will increase or decrease by 0.6Hz per 0.1V difference. When the analog input is increased, an increase to the input equal to 75% of the set value will change the output frequency, and then the frequency will increase according to the set value. Likewise, when the analog input decreases, a decrease in the input equal to 75% of the set value will make an initial change to the output frequency. As a result, the output frequency will be different at acceleration and deceleration, mitigating the effect of analog input changes over the output frequency. 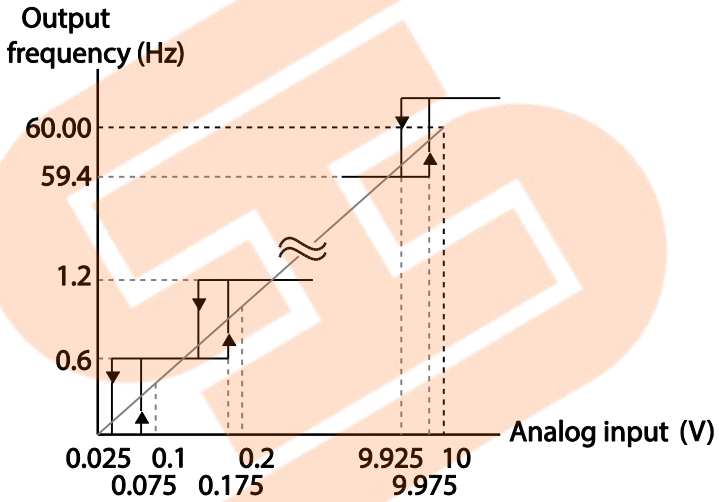 [V1 Quantizing]

4.1.3.2 Setting a Frequency Reference for -10–10V Input

Set the Frq (Frequency reference source) code in the Operation group to 2 (V1), and then set code 06 (V1 Polarity) to 1 (bipolar) in the Input Terminal group (IN). Use the output voltage from an external source to provide input to V1.

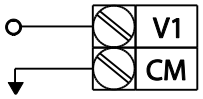

[V1 terminal wiring]

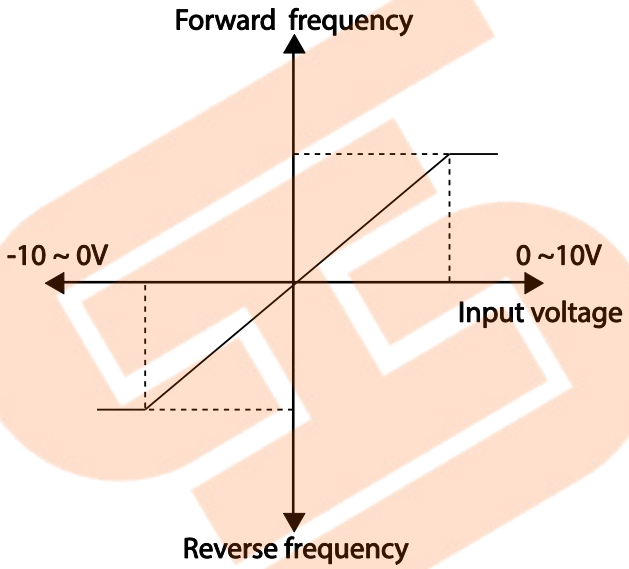

[Bipolar input voltage and output frequency]

Group	Code	Name	LCD Display	Parameter Setting		Setting Range	Unit
Operation	Frq	Frequency reference source	Freq Ref Src	2	V1	0–12	-
In	01	Frequency at maximum analog input	Freq at 100%	60.00		0– Max Frequency	Hz
	05	V1 input monitor	V1 Monitor	0.00		0.00–12.00V	V
	06	V1 polarity options	V1 Polarity	1	Bipolar	0–1	-
	12	V1 minimum input voltage	V1- volt x1	0.00		10.00–0.00V	V
	13	V1 output at minimum voltage (%)	V1- Perc y1	0.00		-100.00–0.00%	%
	14	V1maximum input	V1- Volt x2	-10.00		-12.00 –0.00V	V

Group	Code	Name	LCD Display	Parameter Setting	Setting Range	Unit
		voltage				
	15	V1 output at maximum voltage (%)	V1- Perc y2	-100.00	-100.00–0.00%	%

Rotational Directions for Different Voltage Inputs

Command / Voltage Input	Input voltage	
	0-10V	-10-0V
FWD	Forward	Reverse
REV	Reverse	Forward

-10–10V Voltage Input Setting Details

Code	Description
In.12 V1- volt x1– In.15 V1- Perc y2	Sets the gradient level and off-set value of the output frequency in relation to the input voltage. These codes are displayed only when In.06 is set to 1 (bipolar). As an example, if the minimum input voltage (at V1) is set to -2 (V) with 10% output ratio, and the maximum voltage is set to -8 (V) with 80% output ratio respectively, the output frequency will vary within the range of 6 - 48 Hz. 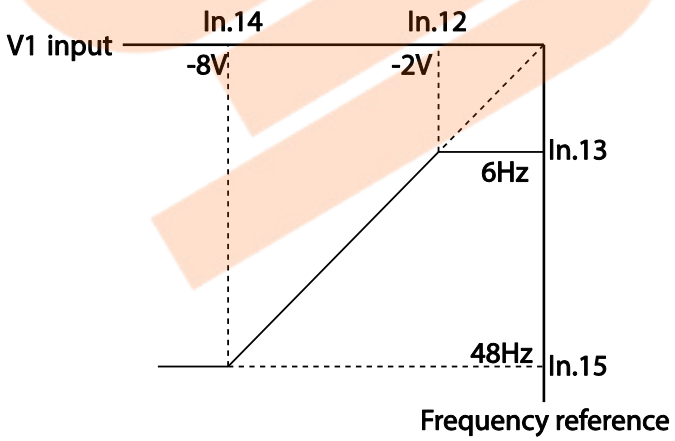 [In.12 V1-volt X1–In.15 V1 Perc y] For details about the 0–+10V analog inputs, refer to the code descriptions In.08 V1 volt x1–In.11 V1 Perc y2 on page *105*.

4.1.3.3 Setting a Reference Frequency using Input Current (I2)

You can set and modify a frequency reference using input current at the I2 terminal after selecting current input at SW 2. Set the Frq (Frequency reference source) code in the Operation group to 5 (I2) and apply 4–20mA input current to I2.

Group	Code	Name	LCD Display	Parameter Setting		Setting Range	Unit
Operation	Frq	Frequency reference source	Freq Ref Src	5	I2	0-12	-
In	01	Frequency at maximum analog input	Freq at 100%	60.00		0- Maximum Frequency	Hz
	50	I2 input monitor	I2 Monitor	0.00		0.00-24.00	mA
	52	I2 input filter time constant	I2 Filter	10		0-10000	ms
	53	I2 minimum input current	I2 Curr x1	4.00		0.00-20.00	mA
	54	I2 output at minimum current (%)	I2 Perc y1	0.00		0-100	%
	55	I2 maximum input current	I2 Curr x2	20.00		0.00-24.00	mA
	56	I2 output at maximum current (%)	I2 Perc y2	100.00		0.00-100.00	%
	61	I2 rotation direction options	I2 Inverting	0	No	0-1	-
	62	I2 Quantizing level	I2 Quantizing	0.04		0*, 0.04–10.00	%

* Quantizing is disabled if '0' is selected.

Input Current (I2) Setting Details

Code	Description
In.01 Freq at 100%	Configures the frequency reference for operation at the maximum current (when In.56 is set to 100%). • If In.01 is set to 40.00Hz, and default settings are used for In.53–56, 20mA input current (max) to I2 will produce a frequency reference of 40.00Hz. • If In.56 is set to 50.00 (%), and default settings are used for In.01 (60Hz) and In.53–55, 20mA input current (max) to I2 will produce a frequency reference of 30.00Hz (50% of 60Hz).
In.50 I2 Monitor	Used to monitor input current at I2.
In.52 I2 Filter	Configures the time for the operation frequency to reach 63% of target frequency based on the input current at I2.
In.53 I2 Curr x1–	Configures the gradient level and off-set value of the output frequency.

Code	Description
In.56 I2 Perc y2	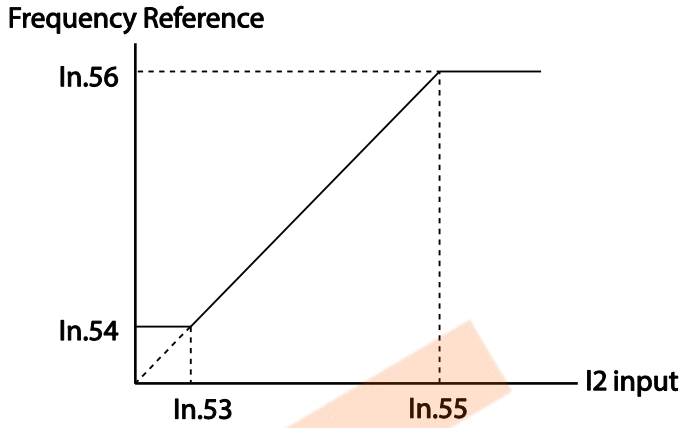 [Gradient and off-set configuration based on output frequency]

4.1.4 Setting a Frequency Reference with Input Voltage (Terminal I2)

Set and modify a frequency reference using input voltage at I2 (V2) terminal by setting SW2 to V2. Set the Frq (Frequency reference source) code in the Operation group to 4 (V2) and apply 0-12V input voltage to I2 (=V2, Analog current/voltage input terminal). Codes In.35-47 will not be displayed when I2 is set to receive current input (Frq code parameter is set to 5).

Group	Code	Name	LCD Display	Parameter Setting		Setting Range	Unit
Operation	Frq	Frequency reference source	Freq Ref Src	4	V2	0–12	-
In	35	V2 input display	V2 Monitor	0.00		0.00–12.00	V
	37	V2 input filter time constant	V2 Filter	10		0–10000	ms
	38	Minimum V2 input voltage	V2 Volt x1	0.00		0.00–10.00	V
	39	Output% at minimum V2 voltage	V2 Perc y1	0.00		0.00–100.00	%
	40	Maximum V2 input voltage	V2 Volt x2	10.00		0.00–10.00	V
	41	Output% at maximum V2 voltage	V2 Perc y2	100.00		0.00–100.00	%
	46	Invert V2 rotational	V2 Inverting	0	No	0-1	-

Group	Code	Name	LCD Display	Parameter Setting	Setting Range	Unit
		direction				
	47	V2 quantizing level	V2 Quantizing	0.04	0.00*, 0.04–10.00	%

* Quantizing is disabled if '0' is selected.

4.1.5 Setting a Frequency with TI Pulse Input

Set a frequency reference by setting the Frq (Frequency reference source) code in Operation group to 12 (Pulse). In case of Standard I/O (excluding 30-75kW models), set the In.69 P5 Define to 54(TI) and providing 0–32.00kHz pulse frequency to P5.

Group	Code	Name	LCD Display	Parameter Setting	Setting Range	Unit
Operation	Frq	Frequency reference source	Freq Ref Src	12 Pulse	0–12	-
In	69	P5 terminal function setting	P5 Define	54 TI	0-54	-
	01	Frequency at maximum analog input	Freq at 100%	60.00	0.00–Maximum frequency	Hz
	91	Pulse input display	Pulse Monitor	0.00	0.00–50.00	kHz
	92	TI input filter time constant	TI Filter	10	0–9999	ms
	93	TI input minimum pulse	TI Pls x1	0.00	0.00–32.00	kHz
	94	Output% at TI minimum pulse	TI Perc y1	0.00	0.00–100.00	%
	95	TI Input maximum pulse	TI Pls x2	32.00	0.00–32.00	kHz
	96	Output% at TI maximum pulse	TI Perc y2	100.00	0.00–100.00	%
	97	Invert TI direction of rotation	TI Inverting	0 No	0-1	-
	98	TI quantizing level	TI Quantizing	0.04	0.00*, 0.04–10.00	%

* Data shaded in grey is applied only for Standard I/O (excluding 30-75kW models).
*Quantizing is disabled if '0' is selected.

TI Pulse Input Setting Details

Code	Description
In.69 P5 Define	In case of Standard I/O (excluding 30-75kW models), Pulse input TI and Multi-function terminal P5 share the same therminal. Set the In.69 P5 Define to 54(TI).
In.01 Freq at 100%	Configures the frequency reference at the maximum pulse input. The frequency reference is based on 100% of the value set with In.96. • If In.01 is set to 40.00 and codes In.93–96 are set at default, 32kHz input to TI yields a frequency reference of 40.00Hz. • If In.96 is set to 50.00 and codes In.01, In.93–95 are set at default, 32kHz input to the TI terminal yields a frequency reference of 30.00Hz.
In.91 Pulse Monitor	Displays the pulse frequency supplied at TI.
In.92 TI Filter	Sets the time for the pulse input at TI to reach 63% of its nominal frequency (when the pulse frequency is supplied in multiple steps).
In.93 TI Pls x1– In.96 TI Perc y2	Configures the gradient level and offset values for the output frequency. 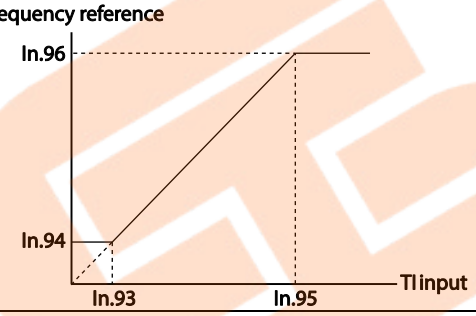
In.97 TI Inverting– In.98 TI Quantizing	Identical to In.16-17 (refer to In.16 V1 Inverting/In.17.V1 Quantizing on page *105*).

4.1.6 Setting a Frequency Reference via RS-485 Communication

Control the inverter with upper-level controllers, such as PCs or PLCs, via RS-485 communication. Set the Frq (Frequency reference source) code in the Operation group to 6 (Int 485) and use the RS-485 signal input terminals (S+/S-/SG) for communication. Refer to *7 RS-485 Communication Features* on page 277.

Group	Code	Name	LCD Display	Parameter Setting		Setting Range	Unit
Operation	Frq	Frequency reference source	Freq Ref Src	6	Int 485	0–12	-
CM	01	Integrated RS-485 communication inverter ID	Int485 St ID	-	1	1-250	-
	02	Integrated communication protocol	Int485 Proto	0	ModBus RTU	0-2	-
				1	Reserved		
				2	LS INV 485		
	03	Integrated communication speed	Int485 BaudR	3	9600 bps	0-7	-
	04	Integrated communication frame configuration	Int485 Mode	0	D8/PN/S1	0-3	-
				1	D8/PN/S2		
				2	D8/PE/S1		
				3	D8/PO/S1		

4.2 Frequency Hold by Analog Input

If you set a frequency reference via analog input at the control terminal block, you can hold the operation frequency of the inverter by assigning a multi-function input as the analog frequency hold terminal. The operation frequency will be fixed upon an analog input signal.

group	Code	Name	LCD Display	Parameter Setting		Setting Range	Unit
Operation	Frq	Frequency reference source	Freq Ref Src	0	Keypad-1	0-12	-
				1	Keypad-2		
				2	V1		
				4	V2		
				5	I2		
				6	Int 485		
				8	Field Bus		
				12	Pulse		
In	65–71	Px terminal configuration	Px Define(Px: P1–P7)	21	Analog Hold	0-54	-

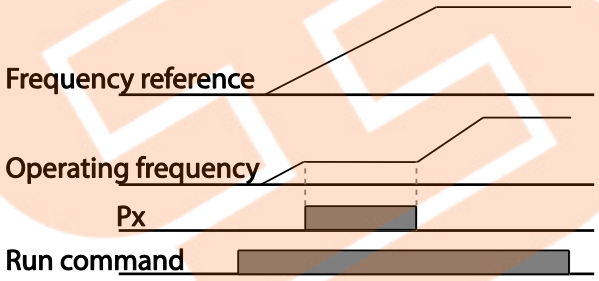

4.3 Changing the Displayed Units (Hz↔Rpm)

You can change the units used to display the operational speed of the inverter by setting Dr. 21 (Speed unit selection) to 0 (Hz) or 1 (Rpm). This function is available only with the LCD keypad.

Group	Code	Name	LCD Display	Parameter Setting		Setting Range	Unit
dr	21	Speed unit selection	Hz/Rpm Sel	0	Hz Display	0-1	-
				1	Rpm Display		

4.4 Setting Multi-step Frequency

Multi-step operations can be carried out by assigning different speeds (or frequencies) to the Px terminals. Step 0 uses the frequency reference source set with the Frq code in the Operation group. Px terminal parameter values 7 (Speed-L), 8 (Speed-M) and 9 (Speed-H) are recognized as binary commands and work in combination with Fx or Rx run commands. The inverter operates according to the frequencies set with St.1–3 (multi-step frequency 1–3) , bA.53–56 (multi-step frequency 4–7) and the binary command combinations.

Group	Code	Name	LCD Display	Parameter Setting		Setting Range	Unit
Operation	St1-St3	Multi-step frequency 1–3	Step Freq - 1–3	-		0-Maximum frequency	Hz
bA	53–56	Multi-step frequency 4–7	Step Freq - 4–7	-		0-Maximum frequency	Hz
In	65–71	Px terminal configuration	Px Define (Px: P1–P7)	7	Speed-L	0–54	-
				8	Speed-M		-
				9	Speed-H		-
	89	Multi-step command delay time	InCheck Time	1		1–5000	ms

Multi-step Frequency Setting Details

Code	Description
Operation group St 1-St3 Step Freq - 1–3	Configure multi-step frequency1–3. If an LCD keypad is in use, bA.50–52 is used instead of St1–St3 (multi-step frequency 1-3).
bA.53-56 Step Freq - 4-7	Configure multi-step frequency 4–7.

<table>
<tr><th>Code</th><th>Description</th></tr>
<tr><td>In.65-71 Px Define</td><td>
Choose the terminals to setup as multi-step inputs, and then set the relevant codes (In.65-71) to 7(Speed-L), 8(Speed-M), or 9(Speed-H).

Provided that terminals P3, P4 and P5 have been set to Speed-L, Speed-M and Speed-H respectively, the following multi-step operation will be available.

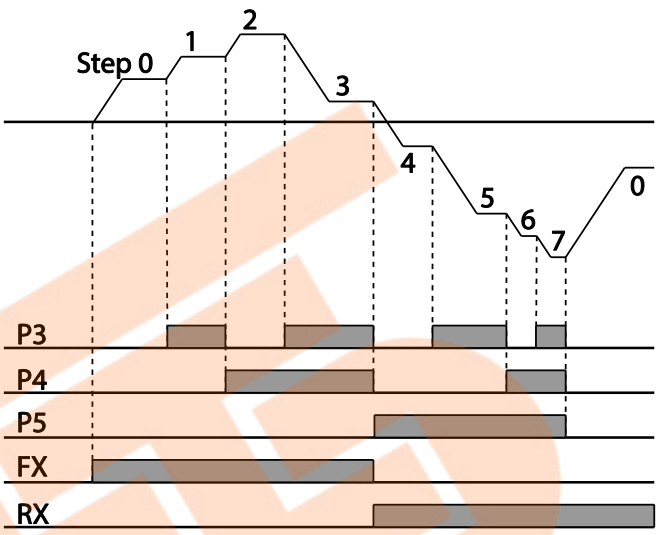

[An example of a multi-step operation]
<table>
<tr><th>Speed</th><th>Fx/Rx</th><th>P5</th><th>P4</th><th>P3</th></tr>
<tr><td>0</td><td>✓</td><td>-</td><td>-</td><td>-</td></tr>
<tr><td>1</td><td>✓</td><td>-</td><td>-</td><td>✓</td></tr>
<tr><td>2</td><td>✓</td><td>-</td><td>✓</td><td>-</td></tr>
<tr><td>3</td><td>✓</td><td>-</td><td>✓</td><td>✓</td></tr>
<tr><td>4</td><td>✓</td><td>✓</td><td>-</td><td>-</td></tr>
<tr><td>5</td><td>✓</td><td>✓</td><td>-</td><td>✓</td></tr>
<tr><td>6</td><td>✓</td><td>✓</td><td>✓</td><td>-</td></tr>
<tr><td>7</td><td>✓</td><td>✓</td><td>✓</td><td>✓</td></tr>
</table>
</td></tr>
<tr><td>In.89 InCheck Time</td><td>Set a time interval for the inverter to check for additional terminal block inputs after receiving an input signal.
After adjusting In.89 to 100ms and an input signal is received at P5, the inverter will search for inputs at other terminals for 100ms, before proceeding to accelerate or decelerate based on P5's configuration.</td></tr>
</table>

4.5 Command Source Configuration

Various devices can be selected as command input devices for theS100 inverter. Input devices available to select include keypad, multi-function input terminal, RS-485 communication and field bus adapter. If UserSeqLink is selected, the common area can be linked with user sequence output and can be used as command.

Group	Code	Name	LCD Display	Parameter Setting		Setting Range	Unit
Operation	drv	Command Source	Cmd Source*	0	Keypad	0-5	-
				1	Fx/Rx-1		
				2	Fx/Rx-2		
				3	Int 485		
				4	Field Bus		
				5	UserSeqLink		

* Displayed under DRV-06 on the LCD keypad.

4.5.1 The Keypad as a Command Input Device

The keypad can be selected as a command input device to send command signals to the inverter. This is configured by setting the drv (command source) code to 0 (Keypad). Press the [RUN] key on the keypad to start an operation, and the [STOP/RESET] key to end it.

group	Code	Name	LCD Display	Parameter Setting		Setting Range	Unit
Operation	drv	Command source	Cmd Source*	0	KeyPad	0-5	-

* Displayed under DRV-06 on the LCD keypad.

4.5.2 Terminal Block as a Command Input Device (Fwd/Rev Run Commands)

Multi-function terminals can be selected as a command input device. This is configured by setting the drv (command source) code in the Operation group to 1(Fx/Rx). Select 2 terminals for the forward and reverse operations, and then set the relevant codes (2 of the 5 multi-function terminal codes, In.65-71 for P1-P7) to 1(Fx) and 2(Rx) respectively. This application enables both terminals to be turned on or off at the same time, constituting a stop command that will cause the inverter to stop operation.

Group	Code	Name	LCD Display	Parameter Setting		Setting Range	Unit
Operation	drv	Command source	Cmd Source*	1	Fx/Rx-1	0-5	-
In	65-71	Px terminal configuration	Px Define (Px: P1– P7)	1	Fx	0-54	-
				2	Rx		

* Displayed under DRV-06 on the LCD keypad.

Fwd/Rev Command by Multi-function Terminal – Setting Details

Code	Description
Operation group drv– Cmd Source	Set to 1(Fx/Rx-1).
In.65–71 Px Define	Assign a terminal for forward (Fx) operation. Assign a terminal for reverse (Rx) operation.

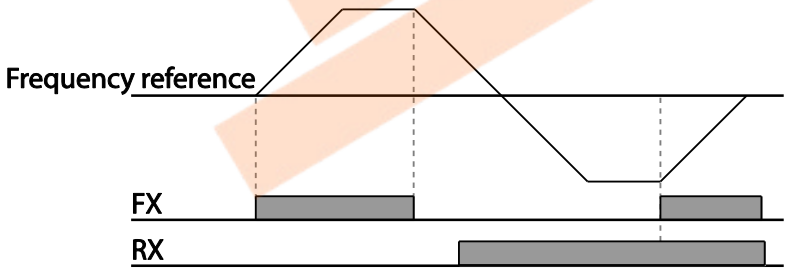

4.5.3 Terminal Block as a Command Input Device (Run and Rotation Direction Commands)

Multi-function terminals can be selected as a command input device. This is configured by setting the drv (command source) code in the Operation group to 2(Fx/Rx-2). Select 2 terminals for run and rotation direction commands, and then select the relevant codes (2 of the 5 multi-function terminal codes, In.65-71 for P1-P7) to 1(Fx) and 2(Rx) respectively. This application uses an Fx input as a run command, and an Rx input to change a motor's rotation direction (On-Rx, Off-Fx).

Group	Code	Name	LCD Display	Parameter Setting		Setting Range	Unit
Operation	Drv	Command source	Cmd Source*	2	Fx/Rx-2	0-5	-
In	65-71	Px terminal configuration	Px Define (Px: P1 – P7)	1	Fx	0-54	-
				2	Rx		

* Displayed under DRV-06 on the LCD keypad.

Run Command and Fwd/Rev Change Command Using Multi-function Terminal – Setting Details

Code	Description
Operation group drv Cmd Source	Set to 2(Fx/Rx-2).
In.65–71 Px Define	Assign a terminal for run command (Fx). Assign a terminal for changing rotation direction (Rx).

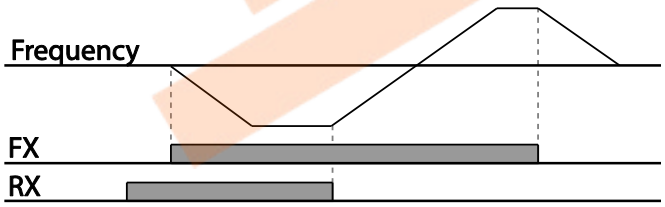

4.5.4 RS-485 Communication as a Command Input Device

Internal RS-485 communication can be selected as a command input device by setting the drv (command source) code in the Operation group to 3(Int 485). This configuration uses upper level controllers such as PCs or PLCs to control the inverter by transmitting and receiving signals via the S+, S-, and Sg terminals at the terminal block. For more details, refer to *7 RS-485 Communication Features* on page 277.

Group	Code	Name	LCD Display	Parameter Setting		Setting Range	Unit
Operation	drv	Command source	Cmd Source*	3	Int 485	0-5	-
CM	01	Integrated communication inverter ID	Int485 St ID	1		1-250	-
	02	Integrated communication protocol	Int485 Proto	0	ModBus RTU	0-2	-
	03	Integrated communication speed	Int485 BaudR	3	9600 bps	0-7	-
	04	Integrated communication frame setup	Int485 Mode	0	D8 / PN / S1	0-3	-

* Displayed under DRV-06 on the LCD keypad.

4.6 Local/Remote Mode Switching

Local/remote switching is useful for checking the operation of an inverter or to perform an inspection while retaining all parameter values. Also, in an emergency, it can also be used to override control and operate the system manually using the keypad.

The [ESC] key is a programmable key that can be configured to carry out multiple functions. For more details, refer to *3.2.4.2 30-75kW Models* on page 78.

Group	Code	Name	LCD Display	Parameter Setting		Setting Range	Unit
dr	90	[ESC] key functions	-	2	Local/Remote	0–2	-
Operation	drv	Command source	Cmd Source*	1	Fx/Rx-1	0–5	-

* Displayed under DRV-06 on the LCD keypad.

Local/Remote Mode Switching Setting Details

Code	Description
dr.90 [ESC] key functions	Set dr.90 to 2(Local/Remote) to perform local/remote switching using the [ESC] key. Once the value is set, the inverter will automatically begin operating in remote mode. Changing from local to remote will not alter any previously configured parameter values and the operation of the inverter will not change. Press the [ESC] key to switch the operation mode back to “local.” The SET light will flash, and the inverter will operate using the [RUN] key on the keypad. Press the [ESC] key again to switch the operation mode back to “remote.” The SET light will turn off and the inverter will operate according to the previous drv code configuration.

Note

Local/Remote Operation

- Full control of the inverter is available with the keypad during local operation (local operation).
- During local operation, jog commands will only work if one of the P1–P7 multi-function terminals (codes In.65–71) is set to 13(RUN Enable) and the relevant terminal is turned on.
- During remote operation (remote operation), the inverter will operate according to the previously set frequency reference source and the command received from the input device.
- If Ad.10 (power-on run) is set to 0(No), the inverter will NOT operate on power-on even when the following terminals are turned on:
  - Fwd/Rev run (Fx/Rx) terminal
  - Fwd/Rev jog terminal (Fwd jog/Rev Jog)
  - Pre-Excitation terminal

  To operate the inverter manually with the keypad, switch to local mode. Use caution when switching back to remote operation mode as the inverter will stop operating. If Ad.10 (power-on run) is set to 0(No), a command through the input terminals will work ONLY AFTER all the terminals listed above have been turned off and then turned on again.

- If the inverter has been reset to clear a fault trip during an operation, the inverter will switch to local operation mode at power-on, and full control of the inverter will be with the keypad. The inverter will stop operating when operation mode is switched from “local” to “remote”. In this case, a run command through an input terminal will work ONLY AFTER all the input terminals have been turned off.

Inverter Operation During Local/Remote Switching

Switching operation mode from “remote” to “local” while the inverter is running will cause the inverter to stop operating. Switching operation mode from “local” to “remote” however, will

cause the inverter to operate based on the command source:

- Analog commands via terminal input: the inverter will continue to run without interruption based on the command at the terminal block. If a reverse operation (Rx) signal is ON at the terminal block at startup, the inverter will operate in the reverse direction even if it was running in the forward direction in local operation mode before the reset.
- Digital source commands: all command sources except terminal block command sources (which are analog sources) are digital command sources that include the keypad, LCD keypad, and communication sources. The inverter stops operation when switching to remote operation mode, and then starts operation when the next command is given.

Caution

Use local/remote operation mode switching only when it is necessary. Improper mode switching may result in interruption of the inverter's operation.

4.7 Forward or Reverse Run Prevention

The rotation direction of motors can be configured to prevent motors to only run in one direction. Pressing the [REV] key on the LCD keypad when direction prevention is configured, will cause the motor to decelerate to 0Hz and stop. The inverter will remain on.

Group	Code	Name	LCD Display	Parameter Setting		Setting Range	Unit
Ad	09	Run prevention options	Run Prevent	0	None	0–2	-
				1	Forward Prev		
				2	Reverse Prev		

Forward/Reverse Run Prevention Setting Details

Code	Description		
Ad.09 Run Prevent	Choose a direction to prevent.		
	Setting		Description
	0	None	Do not set run prevention.
	1	Forward Prev	Set forward run prevention.
	2	Reverse Prev	Set reverse run prevention.

4.8 Power-on Run

A power-on command can be setup to start an inverter operation after powering up, based on terminal block operation commands (if they have been configured). To enable power-on run set the drv (command source) code to 1(Fx/Rx-1) or 2 (Fx/Rx-2) in the Operation group.

Group	Code	Name	LCD Display	Parameter Setting		Setting Range	Unit
Operation	drv	Command source	Cmd Source*	1, 2	Fx/Rx-1 or Fx/Rx-2	0–5	-
Ad	10	Power-on run	Power-on Run	1	Yes	0–1	-

* Displayed under DRV-06 on the LCD keypad.

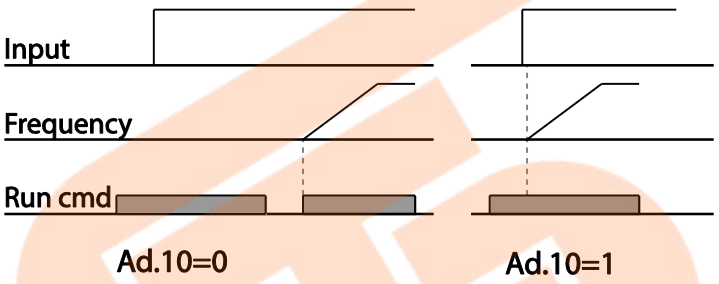

Note

- A fault trip may be triggered if the inverter starts operation while a motor's load (fan-type load) is in free-run state. To prevent this from happening, set bit4 to 1 in Cn. 71 (speed search options) of the Control group. The inverter will perform a speed search at the beginning of the operation.
- If the speed search is not enabled, the inverter will begin its operation in a normal V/F pattern and accelerate the motor. If the inverter has been turned on without power-on run enabled, the terminal block command must first be turned off, and then turned on again to begin the inverter's operation.

⚠ Caution

Use caution when operating the inverter with Power-on Run enabled as the motor will begin rotating when the inverter starts up.

4.9 Reset and Restart

Reset and restart operations can be setup for inverter operation following a fault trip, based on the terminal block operation command (if it is configured). When a fault trip occurs, the inverter cuts off the output and the motor will free-run. Another fault trip may be triggered if the inverter begins its operation while motor load is in a free-run state.

Group	Code	Name	LCD Display	Parameter Setting		Setting Range	Unit
Operation	drv	Command source	Cmd Source*	1 2	Fx/Rx-1 or Fx/Rx-2	0–5	-
Pr	08	Reset restart setup	RST Restart	1	Yes	0–1	
	09	No. of auto restart	Retry Number	0		0–10	
	10	Auto restart delay time	Retry Delay	1.0		0–60	sec

* Displayed under DRV-06 in an LCD keypad.

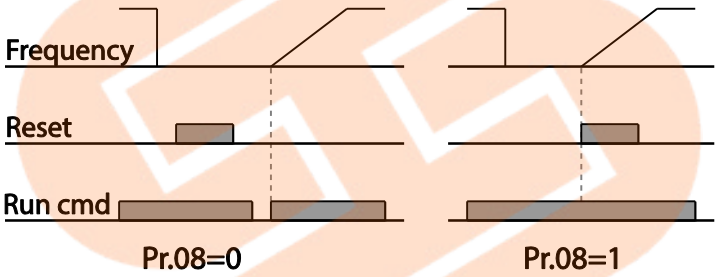

Note

- To prevent a repeat fault trip from occurring, set Cn.71 (speed search options) bit 2 equal to 1. The inverter will perform a speed search at the beginning of the operation.
- If the speed search is not enabled, the inverter will start its operation in a normal V/F pattern and accelerate the motor. If the inverter has been turned on without 'Reset and Restart' enabled, trips must be reset, then turn the terminal block command off and on to begin the inverter's operation.

Caution

Use caution when operating the inverter with Power-on Run enabled as the motor will begin rotating when the inverter starts up.

4.10 Setting Acceleration and Deceleration Times

4.10.1 Acc/Dec Time Based on Maximum Frequency

Acc/Dec time values can be set based on maximum frequency, not on inverter operation frequency. To set Acc/Dec time values based on maximum frequency, set bA. 08 (Acc/Dec reference) in the Basic group to 0 (Max Freq).

Acceleration time set at the ACC (Acceleration time) code in the Operation group (dr.03 in an LCD keypad) refers to the time required for the inverter to reach the maximum frequency from a stopped (0Hz) state. Likewise, the value set at the dEC (deceleration time) code in the Operation group (dr.04 in an LCD keypad) refers to the time required to return to a stopped state (0Hz) from the maximum frequency.

Group	Code	Name	LCD Display	Parameter Setting		Setting Range	Unit
Operation	ACC	Acceleration time	Acc Time	20.0		0.0–600.0	sec
	dEC	Deceleration time	Dec Time	30.0		0.0–600.0	sec
	20	Maximum frequency	Max Freq	60.00		40.00–400.00	Hz
bA	08	Acc/Dec reference frequency	Ramp T Mode	0	Max Freq	0–1	-
	09	Time scale	Time scale	1	0.1sec	0–2	-

Acc/Dec Time Based on Maximum Frequency – Setting Details

Code	Description
bA.08 Ramp T Mode	Set the parameter value to 0 (Max Freq) to setup Acc/Dec time based on maximum frequency.

Configuration		Description
0	Max Freq	Set the Acc/Dec time based on maximum frequency.
1	Delta Freq	Set the Acc/Dec time based on operating frequency.

If, for example, maximum frequency is 60.00Hz, the Acc/Dec times are set to 5 seconds, and the frequency reference for operation is set at 30Hz (half of 60Hz), the time required to reach 30Hz therefore is 2.5 seconds (half of 5 seconds).

<table>
<tr><th>Code</th><th>Description</th></tr>
<tr><td></td><td>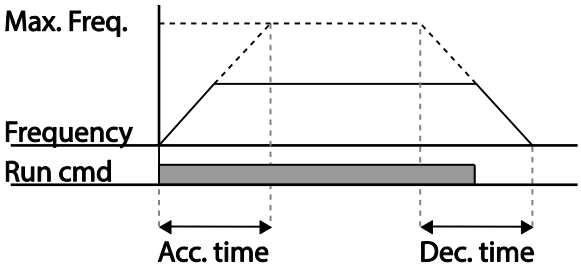
</td></tr>
<tr><td>bA.09
Time scale</td><td>Use the time scale for all time-related values. It is particularly useful when a more accurate Acc/Dec times are required because of load characteristics, or when the maximum time range needs to be extended.
<table>
<tr><th colspan="2">Configuration</th><th>Description</th></tr>
<tr><td>0</td><td>0.01sec</td><td>Sets 0.01 second as the minimum unit.</td></tr>
<tr><td>1</td><td>0.1sec</td><td>Sets 0.1 second as the minimum unit.</td></tr>
<tr><td>2</td><td>1sec</td><td>Sets 1 second as the minimum unit.</td></tr>
</table></td></tr>
</table>

Caution

Note that the range of maximum time values may change automatically when the units are changed. If for example, the acceleration time is set at 6000 seconds, a time scale change from 1 second to 0.01 second will result in a modified acceleration time of 60.00 seconds.

4.10.2 Acc/Dec Time Based on Operation Frequency

Acc/Dec times can be set based on the time required to reach the next step frequency from the existing operation frequency. To set the Acc/Dec time values based on the existing operation frequency, set bA. 08 (acc/dec reference) in the Basic group to 1 (Delta Freq).

Group	Code	Name	LCD Display	Parameter Setting		Setting Range	Unit
Operation	ACC	Acceleration time	Acc Time	20.0		0.0-600.0	sec
	dEC	Deceleration time	Dec Time	30.0		0.0-600.0	sec
bA	08	Acc/Dec reference	Ramp T Mode	1	Delta Freq	0–1	-

Acc/Dec Time Based on Operation Frequency – Setting Details

<table>
<tr><th>Code</th><th>Description</th></tr>
<tr><td>bA.08
Ramp T Mode</td><td>Set the parameter value to 1 (Delta Freq) to set Acc/Dec times based on Maximum frequency.

<table>
<tr><th colspan="2">Configuration</th><th>Description</th></tr>
<tr><td>0</td><td>Max Freq</td><td>Set the Acc/Dec time based on Maximum frequency.</td></tr>
<tr><td>1</td><td>Delta Freq</td><td>Set the Acc/Dec time based on Operation frequency.</td></tr>
</table>

If Acc/Dec times are set to 5 seconds, and multiple frequency references are used in the operation in 2 steps, at 10Hz and 30 Hz, each acceleration stage will take 5 seconds (refer to the graph below).

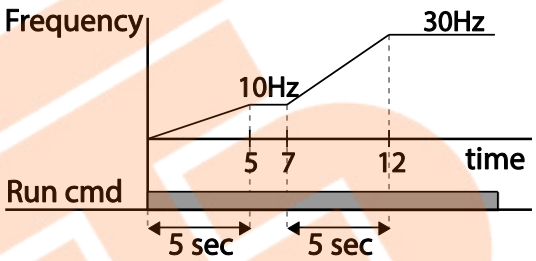

</td></tr>
</table>

4.10.3 Multi-step Acc/Dec Time Configuration

Acc/Dec times can be configured via a multi-function terminal by setting the ACC (acceleration time) and dEC (deceleration time) codes in the Operation group.

Group	Code	Name	LCD Display	Parameter Setting	Setting Range	Unit
Operation	ACC	Acceleration time	Acc Time	20.0	0.0–600.0	sec
	dEC	Deceleration time	Dec Time	30.0	0.0–600.0	sec
bA	70-82	Multi-step acceleration time1-7	Acc Time 1-7	x.xx	0.0–600.0	sec
	71-83	Multi-step deceleration time1-7	Dec Time 1-7	x.xx	0.0–600.0	sec
In	65-71	Px terminal configuration	Px Define (Px: P1–P7)	11 XCEL-L 12 XCEL-M 49 XCEL-H	0–54	-
	89	Multi-step command delay time	In Check Time	1	1–5000	ms

Acc/Dec Time Setup via Multi-function Terminals – Setting Details

<table>
<tr><th>Code</th><th>Description</th></tr>
<tr><td>bA. 70–82
Acc Time 1–7</td><td>Set multi-step acceleration time1-7.</td></tr>
<tr><td>bA.71–83
Dec Time 1–7</td><td>Set multi-step deceleration time1-7.</td></tr>
<tr><td>In.65–71
Px Define (P1–P7)</td><td>Choose and configure the terminals to use for multi-step Acc/Dec time inputs.

<table>
<tr><td colspan="2">Configuration</td><td>Description</td></tr>
<tr><td>11</td><td>XCEL-L</td><td>Acc/Dec command-L</td></tr>
<tr><td>12</td><td>XCEL-M</td><td>Acc/Dec command-M</td></tr>
<tr><td>49</td><td>XCEL-H</td><td>Acc/Dec command-H</td></tr>
</table>

Acc/Dec commands are recognized as binary code inputs and will control the acceleration and deceleration based on parameter values set with bA.70-83.

If, for example, the P4 and P5 terminals are set as XCEL-L and XCEL respectively, the following operation will be available.

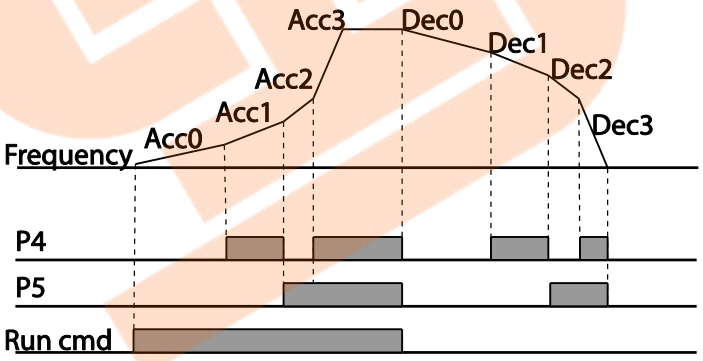

<table>
<tr><th>Acc/Dec time</th><th>P5</th><th>P4</th></tr>
<tr><td>0</td><td>-</td><td>-</td></tr>
<tr><td>1</td><td>-</td><td>✓</td></tr>
<tr><td>2</td><td>✓</td><td>-</td></tr>
<tr><td>3</td><td>✓</td><td>✓</td></tr>
</table>
</td></tr>
<tr><td>In.89 In Check Time</td><td>Set the time for the inverter to check for other terminal block inputs. If In.89 is set to 100ms and a signal is supplied to the P4 terminal, the inverter searches for other inputs over the next 100ms. When the time expires, the Acc/Dec time will be set based on the input received at P4.</td></tr>
</table>

4.10.4 Configuring Acc/Dec Time Switch Frequency

You can switch between two different sets of Acc/Dec times (Acc/Dec gradients) by configuring the switch frequency without configuring the multi-function terminals.

Group	Code	Name	LCD Display	Parameter Setting	Setting Range	Unit
Operation	ACC	Acceleration time	Acc Time	10.0	0.0–600.0	sec
	dEC	Deceleration time	Dec Time	10.0	0.0-600.0	sec
bA	70	Multi-step acceleration time1	Acc Time-1	20.0	0.0-600.0	sec
	71	Multi-step deceleration time1	Dec Time-1	20.0	0.0-600.0	sec
Ad	60	Acc/Dec time switch frequency	Xcel Change Frq	30.00	0-Maximum frequency	Hz

Acc/Dec Time Switch Frequency Setting Details

Code	Description
Ad.60 Xcel Change Fr	After the Acc/Dec switch frequency has been set, Acc/Dec gradients configured at bA.70 and 71 will be used when the inverter's operation frequency is at or below the switch frequency. If the operation frequency exceeds the switch frequency, the configured gradient level, configured for the ACC and dEC codes, will be used. If you configure the P1-P7 multi-function input terminals for multi-step Acc/Dec gradients (XCEL-L, XCEL-M, XCEL-H), the inverter will operate based on the Acc/Dec inputs at the terminals instead of the Acc/Dec switch frequency configurations.

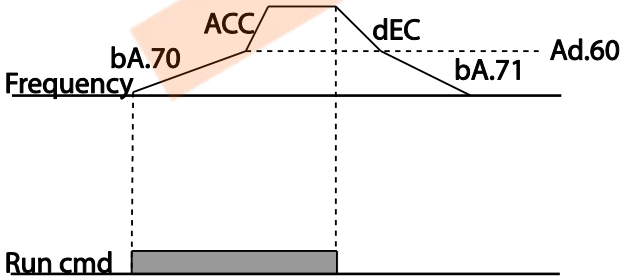

4.11 Acc/Dec Pattern Configuration

Acc/Dec gradient level patterns can be configured to enhance and smooth the inverter's acceleration and deceleration curves. Linear pattern features a linear increase or decrease to the output frequency, at a fixed rate. For an S-curve pattern a smoother and more gradual increase or decrease of output frequency, ideal for lift-type loads or elevator doors, etc. S-curve gradient level can be adjusted using codes Ad. 03-06 in the Advanced group.

Group	Code	Name	LCD Display	Parameter Setting		Setting Range	Unit
bA	08	Acc/Dec reference	Ramp T mode	0	Max Freq	0–1	-
Ad	01	Acceleration pattern	Acc Pattern	0	Linear	0–1	-
	02	Deceleration pattern	Dec Pattern	1	S-curve		-
	03	S-curve Acc start gradient	Acc S Start	40		1-100	%
	04	S-curve Acc end gradient	Acc S End	40		1-100	%
	05	S-curve Dec start gradient	Dec S Start	40		1–100	%
	06	S-curve Dec end gradient	Dec S End	40		1–100	%

Acc/Dec Pattern Setting Details

Code	Description
Ad.03 Acc S Start	Sets the gradient level as acceleration starts when using an S-curve, Acc/Dec pattern. Ad. 03 defines S-curve gradient level as a percentage, up to half of total acceleration. If the frequency reference and maximum frequency are set at 60Hz and Ad.03 is set to 50%, Ad. 03 configures acceleration up to 30Hz (half of 60Hz).The inverter will operate S-curve acceleration in the 0-15Hz frequency range (50% of 30Hz). Linear acceleration will be applied to the remaining acceleration within the 15-30Hz frequency range.
Ad.04 Acc S End	Sets the gradient level as acceleration ends when using an S-curve Acc/Dec pattern. Ad. 03 defines S-curve gradient level as a percentage, above half of total acceleration. If the frequency reference and the maximum frequency are set at 60Hz and Ad.04 is set to 50%, setting Ad. 04 configures acceleration to increase from 30Hz (half of 60Hz) to 60Hz (end of acceleration). Linear acceleration will be applied within the 30-45Hz frequency range. The inverter will perform an S-curve acceleration for the remaining acceleration in the 45-60Hz frequency range.
Ad.05 Dec S Start – Ad.06 Dec S End	Sets the rate of S-curve deceleration. Configuration for codes Ad.05 and Ad.06 may be performed the same way as configuring codes Ad.03 and Ad.04.

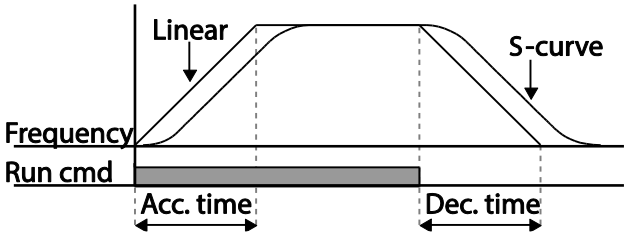

[Acceleration / deceleration pattern configuration]

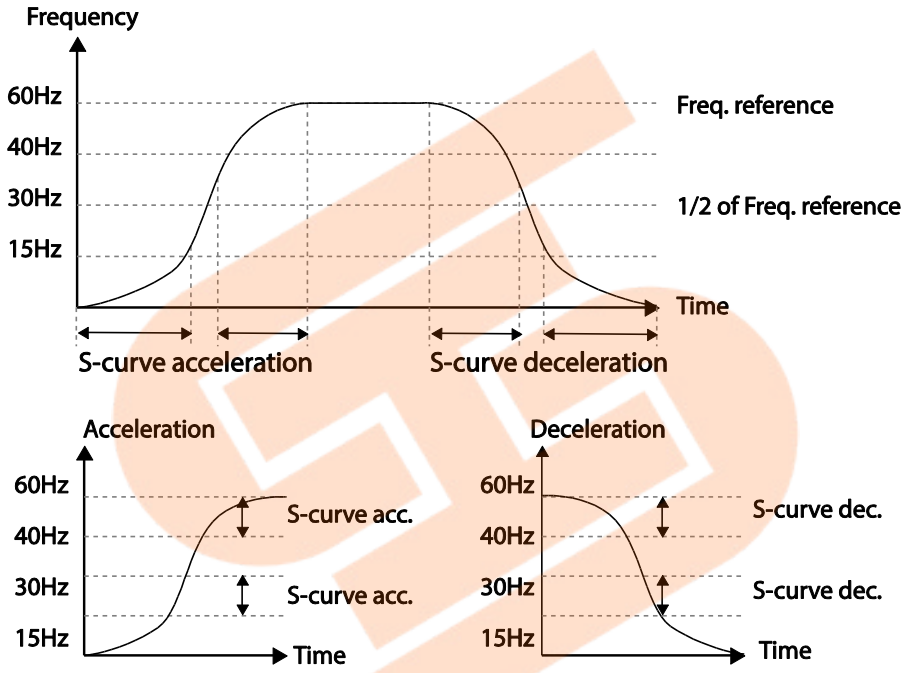

[Acceleration / deceleration S-curve parrten configuration]

Note

The Actual Acc/Dec time during an S-curve application

Actual acceleration time = user-configured acceleration time + user-configured acceleration time x starting gradient level/2 + user-configured acceleration time x ending gradient level/2.
Actual deceleration time = user-configured deceleration time + user-configured deceleration time x starting gradient level/2 + user-configured deceleration time x ending gradient level/2.

Caution

Note that actual Acc/Dec times become greater than user defined Acc/Dec times when S-curve Acc/Dec patterns are in use.

4.12 Stopping the Acc/Dec Operation

Configure the multi-function input terminals to stop acceleration or deceleration and operate the inverter at a fixed frequency.

Group	Code	Name	LCD Display	Parameter Setting		Setting Range	Unit
In	65-71	Px terminal configuration	Px Define (Px: P1- P7)	25	XCEL Stop	0-54	-

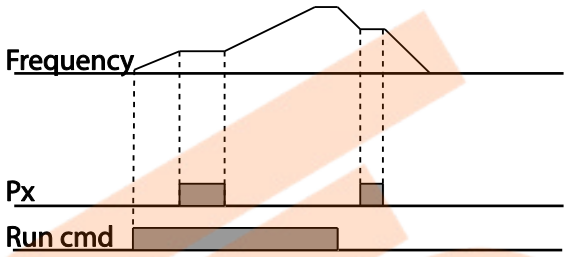

4.13 V/F(Voltage/Frequency) Control

Configure the inverter's output voltages, gradient levels and output patterns to achieve a target output frequency with V/F control. The amount of of torque boost used during low frequency operations can also be adjusted.

4.13.1 Linear V/F Pattern Operation

A linear V/F pattern configures the inverter to increase or decrease the output voltage at a fixed rate for different operation frequencies based on V/F characteristics. A linear V/F pattern is partcularly useful when a constant torque load is applied.

Group	Code	Name	LCD Display	Parameter Setting		Setting Range	Unit
dr	09	Control mode	Control Mode	0	V/F	0–4	-
	18	Base frequency	Base Freq	60.00		30.00–400.00	Hz
	19	Start frequency	Start Freq	0.50		0.01–10.00	Hz
bA	07	V/F pattern	V/F Pattern	0	Linear	0–3	-

Linear V/F Pattern Setting Details

Code	Description
dr.18 Base Freq	Sets the base frequency. A base frequency is the inverter's output frequency when running at its rated voltage. Refer to the motor's rating plate to set this parameter value.
dr.19 Start Freq	Sets the start frequency. A start frequency is a frequency at which the inverter starts voltage output. The inverter does not produce output voltage while the frequency reference is lower than the set frequency. However, if a deceleration stop is made while operating above the start frequency, output voltage will continue until the operation frequency reaches a full-stop (0Hz). 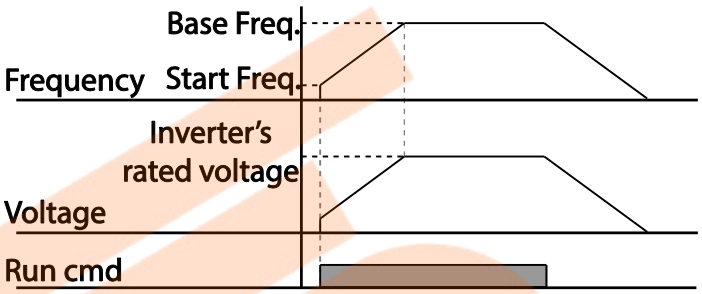

4.13.2 Square Reduction V/F pattern Operation

Square reduction V/F pattern is ideal for loads such as fans and pumps. It provides non-linear acceleration and deceleration patterns to sustain torque throughout the whole frequency range.

Group	Code	Name	LCD Display	Parameter Setting		Setting Range	Unit
bA	07	V/F pattern	V/F Pattern	1	Square	0–3	-
				3	Square2		

Square Reduction V/F pattern Operation - Setting Details

Code	Description
bA.07 V/F Pattern	Sets the parameter value to 1(Square) or 3(Square2) according to the load's start characteristics.

Setting		Function
1	Square	The inverter produces output voltage proportional to 1.5 square of the operation frequency.
3	Square2	The inverter produces output voltage proportional to 2 square of the operation frequency. This setup is ideal for variable torque loads such as fans or pumps.

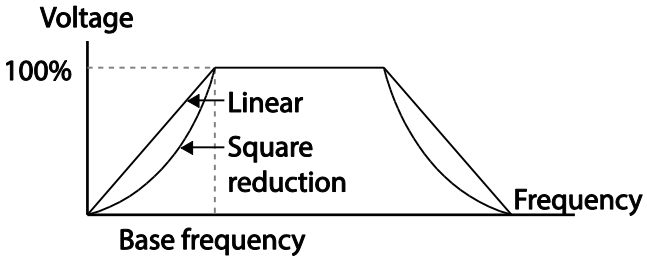

4.13.3 User V/F Pattern Operation

The S100 inverter allows the configuration of user-defined V/F patterns to suit the load characteristics of special motors.

Group	Code	Name	LCD Display	Parameter Setting		Setting Range	Unit
bA	07	V/F pattern	V/F Pattern	2	User V/F	0-3	-
	41	User Frequency1	User Freq 1	15.00		0-Maximum frequency	Hz
	42	User Voltage1	User Volt 1	25		0–100	%
	43	User Frequency2	User Freq 2	30.00		0-Maximum frequency	Hz
	44	User Voltage2	User Volt 2	50		0–100	%
	45	User Frequency3	User Freq 3	45.00		0-Maximum frequency	Hz
	46	User Voltage3	User Volt 3	75		0–100	%
	47	User Frequency4	User Freq 4	Maximum frequency		0-Maximum frequency	Hz
	48	User Voltage4	User Volt 4	100		0–100%	%

User V/F pattern Setting Details

Code	Description
bA.41 User Freq 1– bA.48 User Volt 4	Set the parameter values to assign arbitrary frequencies (User Freq 1-4) for start and maximum frequencies. Voltages can also be set to correspond with each frequency, and for each user voltage (User Volt 1–4).

The 100% output voltage in the figure below is based on the parameter settings of bA.15 (motor rated voltage). If bA.15 is set to 0 it will be based on the input voltage.

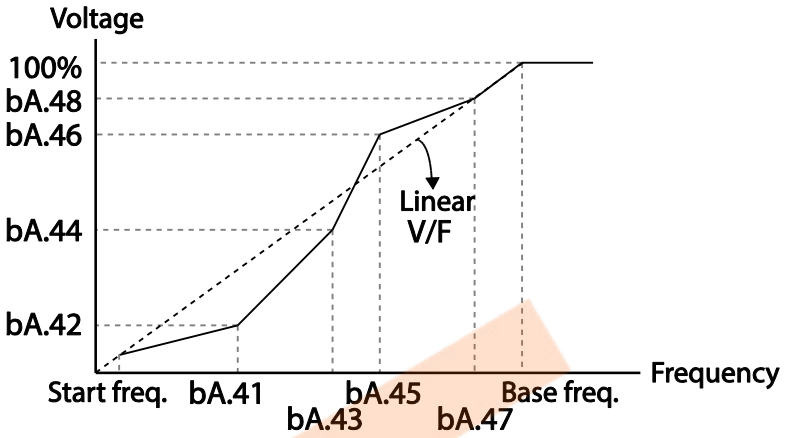

Caution

- When a normal induction motor is in use, care must be taken not to configure the output pattern away from a linear V/F pattern. Non-linear V/F patterns may cause insufficient motor torque or motor overheating due to over-excitation.
- When a user V/F pattern is in use, forward torque boost (dr.16) and reverse torque boost (dr.17) do not operate.

4.14 Torque Boost

4.14.1 Manual Torque Boost

Manual torque boost enables users to adjust output voltage during low speed operation or motor start. Increase low speed torque or improve motor starting properties by manually increasing output voltage. Configure manual torque boost while running loads that require high starting torque, such as lift-type loads.

Group	Code	Name	LCD Display	Parameter Setting		Setting Range	Unit
Dr	15	Torque boost options	Torque Boost	0	Manual	0–1	-
	16	Forward torque boost	Fwd Boost	2.0		0.0–15.0	%
	17	Reverse torque boost	Rev Boost	2.0		0.0–15.0	%

Manual Torque Boost Setting Details

Code	Description
dr.16 Fwd Boost	Set torque boost for forward operation.
dr.17 Rev Boost	Set torque boost for reverse operation.

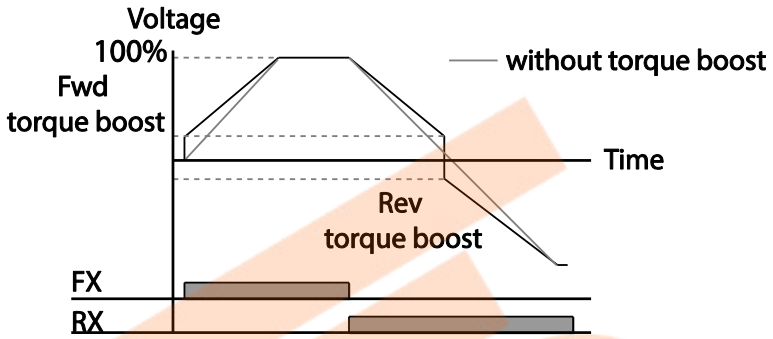

Caution

Excessive torque boost will result in over-excitation and motor overheating .

4.14.2 Auto Torque Boost-1

Auto torque boost enables the inverter to automatically calculate the amount of output voltage required for torque boost based on the entered motor parameters. Because auto torque boost requires motor-related parameters such as stator resistance, inductance, and no-load current, auto tuning (bA.20) has to be performed before auto torque boost can be configured [Refer to *5.9 Auto Tuning* on page *185*]. Similarly to manual torque boost, configure auto torque boost while running a load that requires high starting torque, such as lift-type loads.

Group	Code	Name	LCD Display	Parameter Setting		Setting Range	Unit
Dr	15	torque boost mode	Torque Boost	1	Auto1	0–2	-
bA	20	auto tuning	Auto Tuning	3	Rs+Lsigma	0–6	-

4.14.3 Auto Torque Boost-2

In V/F operation, this adjusts the output voltage if operation is unavailable due to a low

output voltage. It is used when operation is unavailable, due to a lack of starting torque, by providing a voltage boost to the output voltage via the torque current.

Group	Code	Name	LCD Display	Parameter Setting		Setting Range	Unit
Dr	15	torque boost mode	Torque Boost	2	Auto2	0–2	-

4.15 Output Voltage Setting

Output voltage settings are required when a motor's rated voltage differs from the input voltage to the inverter. Set bA.15 to configure the motor's rated operating voltage. The set voltage becomes the output voltage of the inverter's base frequency. When the inverter operates above the base frequency, and when the motor's voltage rating is lower than the input voltage at the inverter, the inverter adjusts the voltage and supplies the motor with the voltage set at bA.15 (motor rated voltage). If the motor's rated voltage is higher than the input voltage at the inverter, the inverter will supply the inverter input voltage to the motor.

If bA.15 (motor rated voltage) is set to 0, the inverter corrects the output voltage based on the input voltage in the stopped condition. If the frequency is higher than the base frequency, when the input voltage is lower than the parameter setting, the input voltage will be the inverter output voltage.

Group	Code	Name	LCD Display	Parameter Setting	Setting Range	Unit
bA	15	Motor rated voltage	Rated Volt	0	0, 170-480	V

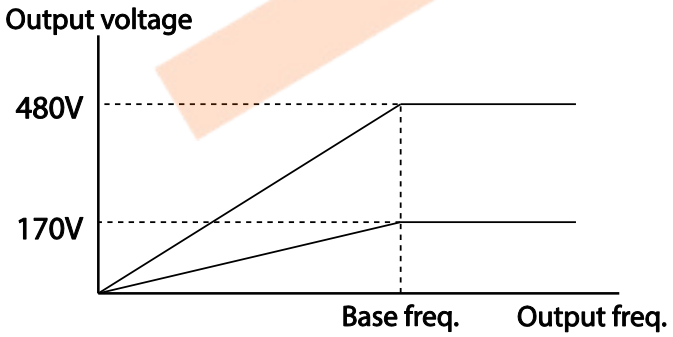

4.16 Start Mode Setting

Select the start mode to use when the operation command is input with the motor in the stopped condition.

4.16.1 Acceleration Start

Acceleration start is a general acceleration mode. If there are no extra settings applied, the motor accelerates directly to the frequency reference when the command is input.

Group	Code	Name	LCD Display	Parameter Setting		Setting Range	Unit
Ad	07	Start mode	Start mode	0	Acc	0-1	-

4.16.2 Start After DC Braking

This start mode supplies a DC voltage for a set amount of time to provide DC braking before an inverter starts to accelerate a motor. If the motor continues to rotate due to its inertia, DC braking will stop the motor, allowing the motor to accelerate from a stopped condition. DC braking can also be used with a mechanical brake connected to a motor shaft when a constant torque load is applied, if a constant torque is required after the the mechanical brake is released.

Group	Code	Name	LCD Display	Parameter Setting		Setting Range	Unit
Ad	07	Start mode	Start Mode	1	DC-Start	0–1	-
	12	Start DC braking time	DC-Start Time	0.00		0.00–60.00	sec
	13	DC Injection Level	DC Inj Level	50		0–200	%

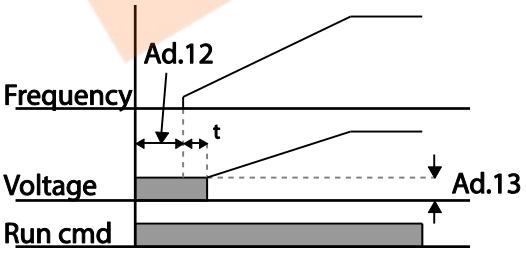

Caution

The amount of DC braking required is based on the motor's rated current. Do not use DC braking resistance values that can cause current draw to exceed the rated current of the inverter. If the DC braking resistance is too high or brake time is too long, the motor may overheat or be damaged.

4.17 Stop Mode Setting

Select a stop mode to stop the inverter operation.

4.17.1 Deceleration Stop

Deceleration stop is a general stop mode. If there are no extra settings applied, the motor decelerates down to 0Hz and stops, as shown in the figure below.

Group	Code	Name	LCD Display	Parameter Setting		Setting Range	Unit
Ad	08	Stop mode	Stop Mode	0	Dec	0-4	-

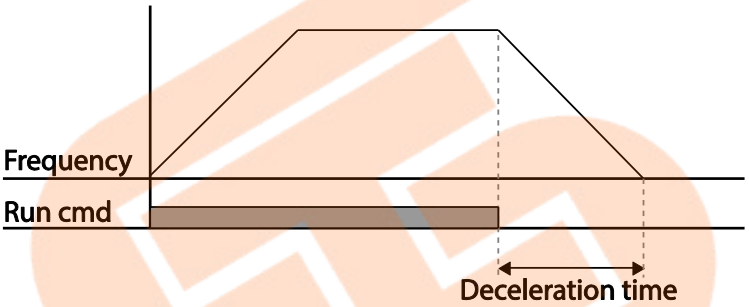

4.17.2 Stop After DC Braking

When the operation frequency reaches the set value during deceleration (DC braking frequency), the inverter stops the motor by supplying DC power to the motor. With a stop command input, the inverter begins decelerating the motor. When the frequency reaches the DC braking frequency set at Ad.17, the inverter supplies DC voltage to the motor and stops it.

Group	Code	Name	LCD Display	Parameter Setting		Setting Range	Unit
Ad	08	Stop mode	Stop Mode	0	Dec	0-4	-
	14	Output block time before braking	DC-Block Time	0.10		0.00–60.00	sec
	15	DC braking time	DC-Brake Time	1.00		0–60	sec
	16	DC braking amount	DC-Brake Level	50		0–200	%
	17	DC braking frequency	DC-Brake Freq	5.00		0.00–60.00	Hz

DC Braking After Stop Setting Details

Code	Description
Ad.14 DC-Block Time	Set the time to block the inverter output before DC braking. If the inertia of the load is great, or if DC braking frequency (Ad.17) is set too high, a fault trip may occur due to overcurrent conditions when the inverter supplies DC voltage to the motor. Prevent overcurrent fault trips by adjusting the output block time before DC braking.
Ad.15 DC-Brake Time	Set the time duration for the DC voltage supply to the motor.
Ad.16 DC-Brake Level	Set the amount of DC braking to apply. The parameter setting is based on the rated current of the motor.
Ad.17 DC-Brake Freq	Set the frequency to start DC braking. When the frequency is reached, the inverter starts deceleration. If the dwell frequency is set lower than the DC braking frequency, dwell operation will not work and DC braking will start instead.

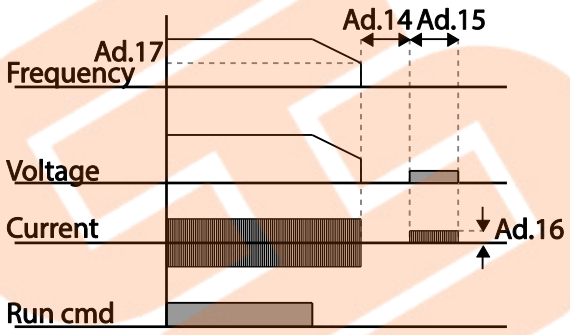

Caution

- Note that the motor can overheat or be damaged if excessive amount of DC braking is applied to the motor, or DC braking time is set too long.
- DC braking is configured based on the motor's rated current. To prevent overheating or damaging motors, do not set the current value higher than the inverter's rated current.

4.17.3 Free Run Stop

When the Operation command is off, the inverter output turns off, and the load stops due to residual inertia.

Group	Code	Name	LCD Display	Parameter Setting		Setting Range	Unit
Ad	08	Stop Method	Stop Mode	2	Free-Run	0-4	-

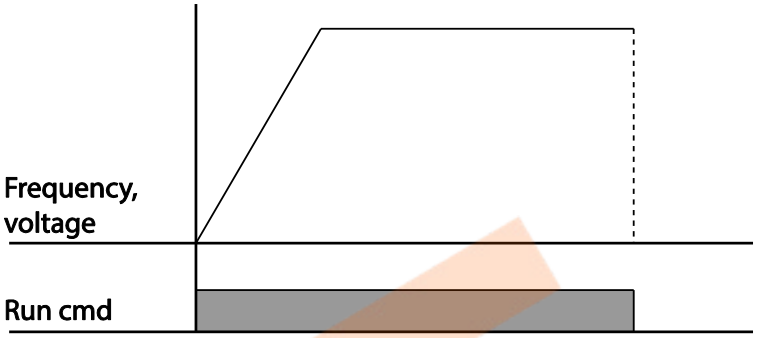

Caution

Note that when there is high inertia on the output side and the motor is operating at high speed, the load's inertia will cause the motor to continue rotating even if the inverter output is blocked.

4.17.4 Power Braking

When the inverter's DC voltage rises above a specified level due to motor regenerated energy, a control is made to either adjust the deceleration gradient level or reaccelerate the motor in order to reduce the regenerated energy. Power braking can be used when short deceleration times are needed without brake resistors, or when optimum deceleration is needed without causing an over voltage fault trip.

Group	Code	Name	LCD Display	Parameter Setting		Setting Range	Unit
Ad	08	Stop mode	Stop Mode	4	Power Braking	0–4	-

Caution

- To prevent overheating or damaging the motor, do not apply power braking to the loads that require frequent deceleration.
- Stall prevention and power braking only operate during deceleration, and power braking takes priority over stall prevention. In other words, when both Pr.50 (stall prevention and flux braking) and Ad.08 (power braking) are set, power braking will take precedence and operate.
- Note that if deceleration time is too short or inertia of the load is too great, an overvoltage fault trip may occur.
- Note that if a free run stop is used, the actual deceleration time can be longer than the pre-

set deceleration time.

4.18 Frequency Limit

Operation frequency can be limited by setting maximum frequency, start frequency, upper limit frequency and lower limit frequency.

4.18.1 Frequency Limit Using Maximum Frequency and Start Frequency

Group	Code	Name	LCD Display	Parameter Setting	Setting Range	Unit
dr	19	Start frequency	Start Freq	0.50	0.01-10.00	Hz
	20	Maximum frequency	Max Freq	60.00	40.00-400.00	Hz

Frequency Limit Using Maximum Frequency and Start Frequency - Setting Details

Code	Description
dr.19 Start Freq	Set the lower limit value for speed unit parameters that are expressed in Hz or rpm. If an input frequency is lower than the start frequency, the parameter value will be 0.00.
dr.20 Max Freq	Set upper and lower frequency limits. All frequency selections are restricted to frequencies from within the upper and lower limits. This restriction also applies when you in input a frequency reference using the keypad.

4.18.2 Frequency Limit Using Upper and Lower Limit Frequency Values

Group	Code	Name	LCD Display	Parameter Setting	Setting Range	Unit
Ad	24	Frequency limit	Freq Limit	0 No	0–1	-
	25	Frequency lower limit value	Freq Limit Lo	0.50	0.0-maximum frequency	Hz
	26	Frequency upper limit value	Freq Limit Hi	Maximum frequency	minimum-maximum frequency	Hz

Frequency Limit Using Upper and Lower Limit Frequencies - Setting Details

Code	Description
Ad.24 Freq Limit	The initial setting is 0(No). Changing the setting to 1(Yes) allows the setting of frequencies between the lower limit frequency (Ad.25) and the upper limit frequency (Ad.26). When the setting is 0(No), codes Ad.25 and Ad.26 are not visible.
Ad.25 Freq Limit Lo, Ad.26 Freq Limit Hi	Set an upper limit frequency to all speed unit parameters that are expressed in Hz or rpm, except for the base frequency (dr.18). Frequency cannot be set higher than the upper limit frequency.

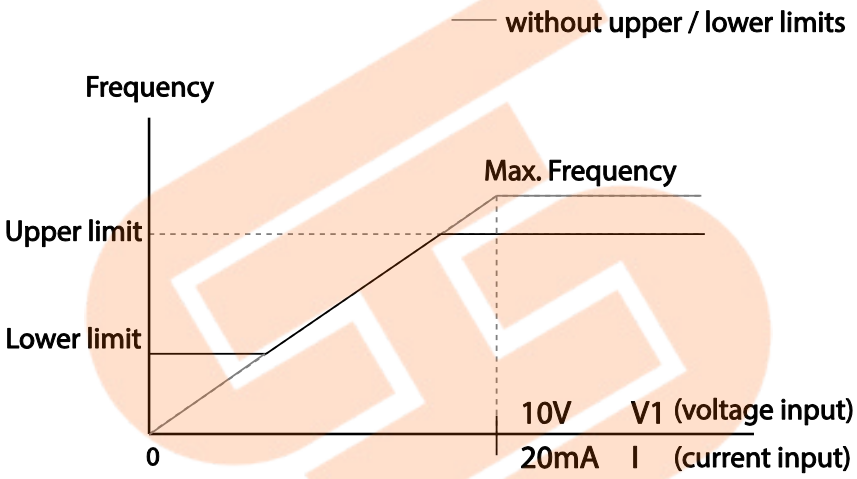

4.18.3 Frequency Jump

Use frequency jump to avoid mechanical resonance frequencies. Jump through frequency bands when a motor accelerates and decelerates. Operation frequencies cannot be set within the pre-set frequency jump band.

When a frequency setting is increased, while the frequency parameter setting value (voltage, current, RS-485 communication, keypad setting, etc.) is within a jump frequency band , the frequency will be maintained at the lower limit value of the frequency band. Then, the frequency will increase when the frequency parameter setting exceeds the range of frequencies used by the frequency jump band.

Group	Code	Name	LCD Display	Parameter Setting		Setting Range	Unit
Ad	27	Frequency jump	Jump Freq	0	No	0–1	-

Group	Code	Name	LCD Display	Parameter Setting	Setting Range	Unit
	28	Jump frequency lower limit1	Jump Lo 1	10.00	0.00–Jump frequency upper limit 1	Hz
	29	Jump frequency upper limit1	Jump Hi 1	15.00	Jump frequency lower limit 1-Maximum frequency	Hz
	30	Jump frequency lower limit 2	Jump Lo 2	20.00	0.00–Jump frequency upper limit 2	Hz
	31	Jump frequency upper limit 2	Jump Hi 2	25.00	Jump frequency lower limit 2-Maximum frequency	Hz
	32	Jump frequency lower limit 3	Jump Lo 3	30.00	0.00–Jump frequency upper limit 3	Hz
	33	Jump frequency upper limit 3	Jump Hi 3	35.00	Jump frequency lower limit 3-Maximum frequency	Hz

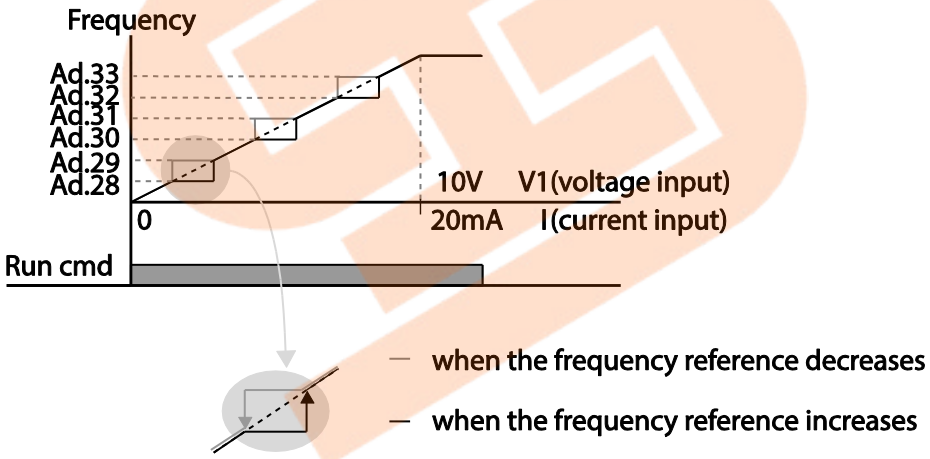

4.19 2nd Operation Mode Setting

Apply two types of operation modes and switch between them as required. For both the first and second command source, set the frequency after shifting operation commands to the multi-function input terminal. Mode swiching can be used to stop remote control during an operation using the communication option and to switch operation mode to operate via the local panel, or to operate the inverter from another remote control location.

Select one of the multi-function terminals from codes In. 65-71 and set the parameter value to 15 (2nd Source).

Group	Code	Name	LCD Display	Parameter Setting		Setting Range	Unit
Operation	drv	Command source	Cmd Source*	1	Fx/Rx-1	0–5	-
	Frq	Frequency reference source	Freq Ref Src	2	V1	0–12	-
bA	04	2nd Command source	Cmd 2nd Src	0	Keypad	0–4	-
	05	2nd Frequency reference source	Freq 2nd Src	0	KeyPad-1	0–12	-
In	65-71	Px terminal configuration	Px Define (Px: P1-P7)	15	2nd Source	0–54	-

* Displayed under DRV-06 in an LCD keypad.

2nd Operation Mode Setting Details

Code	Description
bA.04 Cmd 2nd Src bA.05 Freq 2nd Src	If signals are provided to the multi-function terminal set as the 2nd command source (2nd Source), the operation can be performed using the set values from bA.04-05 instead of the set values from the drv and Frq codes in the Operation group. The 2nd command source settings cannot be changed while operating with the 1st command source (Main Source).

Caution

- When setting the multi-function terminal to the 2nd command source (2nd Source) and input (On) the signal, operation state is changed because the frequency setting and the Operation command will be changed to the 2nd command. Before shifting input to the multi-function terminal, ensure that the 2nd command is correctly set. Note that if the deceleration time is too short or inertia of the load is too high, an overvoltage fault trip may occur.
- Depending on the parameter settings, the inverter may stop operating when you switch the command modes.

4.20 Multi-function Input Terminal Control

Filter time constants and the type of multi-function input terminals can be configured to improve the response of input terminals

Group	Code	Name	LCD Display	Parameter Setting	Setting Range	Unit
In	85	Multi-function input terminal On filter	DI On Delay	10	0-10000	ms
	86	Multi-function input terminal Off filter	DI Off Delay	3	0-10000	ms

Group	Code	Name	LCD Display	Parameter Setting	Setting Range	Unit
	87	Multi-function input terminal selection	DI NC/NO Sel	0 0000*	-	-
	90	Multi-function input terminal status	DI Status	0 0000*	-	-

* Displayed as 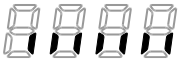 on the keypad.

Multi-function Input Terminal Control Setting Details

Code	Description
In.84 DI Delay Sel	Select whether or not to activate the time values set at In.85 and In.86. If deactivated, the time values are set to the default values at In.85 and In.86. If activated, the set time values at In.85 and In.86 are set to the corresponding terminals.
In.85 DI On Delay, In.86 DI Off Delay	If the input terminal's state is not changed during the set time, when the terminal receives an input, it is recognized as On or Off.
In.87 DI NC/NO Sel	Select terminal contact types for each input terminal. The position of the indicator light corresponds to the segment that is on as shown in the table below. With the bottom segment on, it indicates that the terminal is configured as a A terminal (Normally Open) contact. With the top segment on, it indicates that the terminal is configured as a B terminal (Normally Closed) contact. Terminals are numbered P1-P7, from right to left.

Type	B terminal status (Normally Closed)	A terminal status (Normally Open)
Keypad		
LCD keypad		

Type	B terminal status (Normally Closed)	A terminal status (Normally Open)
Keypad		
LCD keypad		

Code	Description
In.90 DI Status	Display the configuration of each contact. When a segment is configured as A terminal using dr.87, the On condition is indicated by the top segment turning on. The Off condition is indicated when the bottom segment is turned on. When contacts are configured as B terminals, the segment lights behave conversely. Terminals are numbered P1-P7, from right to left.

Type	A terminal setting (On)	A terminal setting (Off)
Keypad		
LCD keypad		

4.21 Multi-keypad Setting

Use multi-keypad settings to control more than one inverter with one LCD keypad. To use this function, first configure RS-485 communication.

The group of inverters to be controlled by the keypad will include a master inverter. The master inverter monitors the other inverters, and slave inverter responds to the master inverter's the input. When using multi-function output, a slave inverter can select to use either the master inverter's output or its own output. When using the multi keypad, first designate the slave inverter and then the master inverter. If the master inverter is designated first, the connected inverter may interpret the condition as a loss of communication.

Master Parameter

Group	Code	Name	LCD Display	Parameter Setting		Setting Range	Unit
CM	95	Communication selection	Int 485 Func	3	KPD-Ready	0-3	-
CNF	03	Multi-keypad ID	Multi KPD ID	3		3-99	-
	42	Multi-function key selection	Multi Key Sel	4	Multi KPD	0-4	-

Slave Parameter

Group	Code	Name	LCD Display	Parameter Setting		Setting Range	Unit
CM	01	Station ID	Int485 St ID	3		3-99	-
	95	Communication options	Int 485 Func	3	KPD-Ready	0-3	-

Multi-keypad Setting Details

Code	Description
CM.01 Int485 St ID	Prevents conflict by designating a unique identification value to an inverter. Values can be selected from numbers between 3-99.
CM.95 Int 485 Func	Set the value to 3(KPD-Ready) for both master and slave inverter
CNF-03 Multi KPD ID	Select an inverter to monitor from the group of inverters.
CNF-42 Multi key Sel	Select a multi-function key type 4(Multi KPD) .

Caution

- Multi-keypad (Multi-KPD) features work only with code version 1.00, IO S/W version 0.11, and keypad S/W version 1.07 or higher versions.
- The multi-keypad feature will not work when the multi-keypad ID (CNF-03 Multi-KPD ID) setting is identical to the RS-485 communication station ID (CM-01 Int485 st ID) setting.
- The master/slave setting cannot be changed while the inverter is operating in slave mode.

4.22 User Sequence Setting

User Sequence creates a simple sequence from a combination of different function blocks. The sequence can comprise of a maximum of 18 steps using 29 function blocks and 30 void parameters.

1 Loop refers to a single execution of a user configured sequence that contains a maximum of 18 steps. Users can select a Loop Time of between 10-1,000ms.

The codes for user sequences configuration can be found in the US group (for user sequence settings) and the UF group (for function block settings). US, UF groups are displayed when the code AP.02 is set to 1.

Group	Code	Name	LCD Display	Parameter Setting	Setting Range	Unit
AP	02	User sequence activation	User Seq En	0	0–1	-
US	01	User sequence operation command	User Seq Con	0	0–2	-
	02	User sequence operation time	User Loop Time	0	0–5	-
	11-28	Output address link1-18	Link UserOut 1-18	0	0–0xFFFF	-
	31-	Input value setting1-30	Void Para1-30	0	-9999–9999	-

Group	Code	Name	LCD Display	Parameter Setting	Setting Range	Unit
	60					
UF	01	User function 1	User Func1	0	0-28	-
	02	User function input 1-A	User Input 1-A	0	0-0xFFFF	-
	03	User function input 1-B	User Input 1-B	0	0-0xFFFF	-
	04	User function input 1-C	User Input 1-C	0	0-0xFFFF	-
	05	User function output 1	User Output 1	0	-32767-32767	-
	06	User function 2	User Func2	0	0-28	-
	07	User function input 2-A	User Input 2-A	0	0-0xFFFF	-
	08	User function input 2-B	User Input 2-B	0	0-0xFFFF	-
	09	User function input 2-C	User Input 2-C	0	0-0xFFFF	-
	10	User function output 2	User Output 2	0	-32767-32767	-
	11	User function 3	User Func3	0	0-28	-
	12	User function input 3-A	User Input 3-A	0	0-0xFFFF	-
	13	User function input 3-B	User Input 3-B	0	0-0xFFFF	-
	14	User function input 3-C	User Input 3-C	0	0-0xFFFF	-
	15	User function output 3	User Output 3	0	-32767-32767	-
	16	Uer function 4	User Func4	0	0-28	-
	17	User function input 4-A	User Input 4-A	0	0-0xFFFF	-
	18	User function input 4-B	User Input 4-B	0	0-0xFFFF	-
	19	User function input 4-C	User Input 4-C	0	0-0xFFFF	-
	20	User function output 4	User Output 4	0	-32767-32767	-
	21	User function 5	User Func5	0	0-28	-
	22	User function input 5-A	User Input 5-A	0	0-0xFFFF	-
	23	User function input 5-B	User Input 5-B	0	0-0xFFFF	-
	24	User function input 5-C	User Input 5-C	0	0-0xFFFF	-
	25	User function output 5	User Output 5	0	-32767-32767	-
	26	User function 6	User Func6	0	0-28	-
	27	User function input 6-A	User Input 6-A	0	0-0xFFFF	-
	28	User function input 6-B	User Input 6-B	0	0-0xFFFF	-

Group	Code	Name	LCD Display	Parameter Setting	Setting Range	Unit
	29	User function input 6-C	User Input 6-C	0	0-0xFFFF	-
	30	User function output 6	User Output 6	0	-32767-32767	-
	31	User function 7	User Func7	0	0-28	-
	32	User function input 7-A	User Input 7-A	0	0-0xFFFF	-
	33	User function input 7-B	User Input 7-B	0	0-0xFFFF	-
	34	User function input 7-C	User Input 7-C	0	0-0xFFFF	-
	35	User function output 7	User Output 7	0	-32767-32767	-
	36	User function 8	User Func8	0	0-28	-
	37	User function input 8-A	User Input 8-A	0	0-0xFFFF	-
	38	User function input8-B	User Input 8-B	0	0-0xFFFF	-
	39	User function input 8-C	User Input 8-C	0	0-0xFFFF	-
	40	User function output 8	User Output 8	0	-32767-32767	-
	41	User function 9	User Func9	0	0-28	-
	42	User function input 9-A	User Input 9-A	0	0-0xFFFF	-
	43	User function input 9-B	User Input 9-B	0	0-0xFFFF	-
	44	User function input 9-C	User Input 9-C	0	0-0xFFFF	-
	45	User function output 9	User Output 9	0	-32767-32767	-
	46	User function 10	User Func10	0	0-28	-
	47	User function input 10-A	User Input 10-A	0	0-0xFFFF	-
	48	User function input 10-B	User Input 10-B	0	0-0xFFFF	-
	49	User function input 10-C	User Input 10-C	0	0-0xFFFF	-
	50	User function output 10	User Output 10	0	-32767-32767	-
	51	User function 11	User Func11	0	0-28	-
	52	User function input 11-A	User Input 11-A	0	0-0xFFFF	-
	53	User function input 11-B	User Input 11-B	0	0-0xFFFF	-
	54	User function input 11-C	User Input 11-C	0	0-0xFFFF	-
	55	User function output 11	User Output 11	0	-32767-32767	-
	56	User function 12	User Func12	0	0-28	-

Group	Code	Name	LCD Display	Parameter Setting	Setting Range	Unit
	57	User function input 12-A	User Input 12-A	0	0-0xFFFF	-
	58	User function input 12-B	User Input 12-B	0	0-0xFFFF	-
	59	User function input 12-C	User Input 12-C	0	0-0xFFFF	-
	60	User function output 12	User Output 12	0	-32767-32767	-
	61	User function 13	User Func13	0	0-28	-
	62	User function input 13-A	User Input 13-A	0	0-0xFFFF	-
	63	User function input 13-B	User Input 13-B	0	0-0xFFFF	-
	64	User function input 13-C	User Input 13-C	0	0-0xFFFF	-
	65	User function output 13	User Output 13	0	-32767-32767	-
	66	User function 14	User Func14	0	0-28	-
	67	User function input 14-A	User Input 14-A	0	0-0xFFFF	-
	68	User function input14-B	User Input 14-B	0	0-0xFFFF	-
	69	User function input 14-C	User Input 14-C	0	0-0xFFFF	-
	70	User function output14	User Output 14	0	-32767-32767	-
	71	User function 15	User Func15	0	0-28	-
	72	User function input 15-A	User Input 15-A	0	0-0xFFFF	-
	73	User function input 15-B	User Input 15-B	0	0-0xFFFF	-
	74	User function input 15-C	User Input 15-C	0	0-0xFFFF	-
	75	User function output 15	User Output 15	0	-32767-32767	-
	76	User function 16	User Func16	0	0-28	-
	77	User function input 16-A	User Input 16-A	0	0-0xFFFF	-
	78	User function input 16-B	User Input 16-B	0	0-0xFFFF	-
	79	User function input 16-C	User Input 16-C	0	0-0xFFFF	-
	80	User function output 16	User Output 16	0	-32767-32767	-
	81	User function 17	User Func17	0	0-28	-
	82	User function input 17-A	User Input 17-A	0	0-0xFFFF	-
	83	User function input 17-B	User Input 17-B	0	0-0xFFFF	-
	84	User function input 17-C	User Input 17-C	0	0-0xFFFF	-
	85	User function output 17	User Output 17	0	-32767-	-

Group	Code	Name	LCD Display	Parameter Setting	Setting Range	Unit
					32767	
	86	User function 18	User Func18	0	0-28	-
	87	User function input 18-A	User Input 18-A	0	0-0xFFFF	-
	88	User function input 18-B	User Input 18-B	0	0-0xFFFF	-
	89	User function input 18-C	User Input 18-C	0	0-0xFFFF	-
	90	User function output 18	User Output 18	0	-32767-32767	-

User Sequence Setting Details

Code	Description
AP.02 User Seq En	Display the parameter groups related to a user sequence.
US.01 User Seq Con	Set Sequence Run and Sequence Stop with the keypad. Parameters cannot be adjusted during an operation. To adjust parameters, the operation must be stopped.
US.02 User Loop Time	Set the user sequence Loop Time. User sequence loop time can be set to 0.01s/0.02s/ 0.05s/0.1s/0.5s/1s.
US.11–28 Link UserOut1–18	Set parameters to connect 18 Function Blocks. If the input value is 0x0000, an output value cannot be used. To use the output value in step 1 for the frequency reference (Cmd Frequency), input the communication address(0x1101) of the Cmd frequency as the Link UserOut1 parameter.
US.31–60 Void Para1–30	Set 30 void parameters. Use when constant (Const) parameter input is needed in the user function block.
UF.01–90	Set user defined functions for the 18 function blocks. If the function block setting is invalid, the output of the User Output@ is -1. All the outputs from the User Output@ are read only, and can be used with the user output link@ (Link UserOut@) of the US group.

Function Block Parameter Structure

Type	Description
User Func @*	Choose the function to perform in the function block.
User Input @-A	Communication address of the function's first input parameter.
User Input @-B	Communication address of the function's second input parameter.
User Input @-C	Communication address of the function's third input parameter.
User Output @	Output value (Read Only) after performing the function block.

* @ is the step number (1-18).

User Function Operation Condition

Number	Type	Description
0	NOP	No Operation.
1	ADD	Addition operation, (A + B) + C If the C parameter is 0x0000, it will be recognized as 0.
2	SUB	Subtraction operation, (A - B) - C If the C parameter is 0x0000, it will be recognized as 0.
3	ADDSUB	Addition andsubtraction compound operation, (A + B) - C If the C parameter is 0x0000, it will be recognized as 0.
4	MIN	Output the smallest value of the input values, MIN(A, B, C). If the C parameter is 0x0000, operate only with A, B.
5	MAX	Output the largest value of the input values, MAX(A, B, C). If the C parameter is 0x0000, operate only with A, B.
6	ABS	Output the absolute value of the A parameter, | A |. This operation does not use the B, or C parameter.
7	NEGATE	Output the negative value of the A parameter, -(A). This operation does not use the B, or C parameter.
8	REMAINDER	Remainder operation of A and B, A % B This operation does not use the C parameter.
9	MPYDIV	Multiplication, division compound operation, (A x B)/C. If the C parameter is 0x0000, output the multiplication operation of (A x B).
10	COMPARE-GT (greater than)	Comparison operation: if (A > B) the output is C; if (A </=B) the output is 0. If the condition is met, the output parameter is C. If the condition is not met, the output is 0(False). If the C parameter is 0x0000 and if the condition is met, the output is 1(True).
11	COMPARE-GTEQ (great than or equal to)	Comparison operation; if (A >/= B) output is C; if (A<B) the output is 0. If the condition is met, the output parameter is C. If the condition is not met, the output is 0(False). If the C parameter is 0x0000 and if the condition is met, the output is 1(True).
12	COMPARE-EQUAL	Comparison operation, if(A == B) then the output is C. For all other values the output is 0. If the condition is met, the output parameter is C. if the condition is not met, the output is 0(False). If the C parameter is 0x0000 and if the condition is met, the output is 1(True).
13	COMPARE-NEQUAL	Comparison operation, if(A != B) then the output is C. For all other values the output is 0. If the condition is met, the output parameter is C. If the condition is not met, the output is 0(False). If the C parameter is 0x0000 and if the condition is met, the output is 1(True).
14	TIMER	Adds 1 each time a user sequence completes a loop. A: Max Loop, B: Timer Run/Stop, C: Choose output mode. If input of B is 1, timer stops (output is 0). If input is 0, timer runs. If input of C is 1, output the current timer value. If input of C is 0, output 1 when timer value exceeds A(Max) value. If the C parameter is 0x0000, C will be recognized as 0. Timer overflow Initializes the timer value to 0.
15	LIMIT	Sets a limit for the A parameter. If input to A is between B and C, output the input to A.

Number	Type	Description
		If input to A is larger than B, output B. If input of A is smaller than C, output C. B parameter must be greater than or equal to the C parameter.
16	AND	Output the AND operation, (A and B) and C. If the C parameter is 0x0000, operate only with A, B.
17	OR	Output the OR operation, (A | B) | C. If the C parameter is 0x0000, operate only with A, B.
18	XOR	Output the XOR operation, (A ^ B) ^ C. If the C parameter is 0x0000, operate only with A, B.
19	AND/OR	Output the AND/OR operation, (A andB) | C. If the C parameter is 0x0000, operate only with A, B.
20	SWITCH	Output a value after selecting one of two inputs, if (A) then B otherwise C. If the input at A is 1, the output will be B. If the input at A is 0, the output parameter will be C.
21	BITTEST	Test the B bit of the A parameter, BITTEST(A, B). If the B bit of the A input is 1, the output is 1. If it is 0, then the output is 0. The input value of B must be between 0-16. If the value is higher than 16, it will be recognized as 16. If input at B is 0, the output is always 0.
22	BITSET	Set the B bit of the A parameter, BITSET(A, B). Output the changed value after setting the B bit to input at A. The input value of B must be between 0-16. If the value is higher than 16, it will be recognized as 16. If the input at B is 0, the output is always 0. This operation does not use the C parameter.
23	BITCLEAR	Clear the B bit of the A parameter, BITCLEAR(A, B). Output the changed value after clearing the B bit to input at A. The input value of B must be between 0-16. If the value is higher than 16, it will be recognized as 16. If the input at B is 0, the output is always 0. This operation does not use the C parameter.
24	LOWPASSFILTER	Output the input at A as the B filter gains time constant, B x US-02 (US Loop Time. In the above formula, set the time when the output of A reaches 63.3% C stands for the filter operation. If it is 0, the operation is started.
25	PI_CONTROL	P, I gain = A, B parameter input, then output as C. Conditions for PI_PROCESS output: C = 0: Const PI, C = 1: PI_PROCESS-B >= PI_PROCESS-OUT >= 0, C = 2: PI_PROCESS-B >= PI_PROCESS-OUT >= -(PI_PROCESS-B), P gain = A/100, I gain = 1/(Bx Loop Time), If there is an error with PI settings, output -1.
26	PI_PROCESS	A is an input error, B is an output limit, C is the value of Const PI output.

Number	Type	Description
		Range of C is 0-32,767.
27	UPCOUNT	Upcounts the pulses and then output the value- UPCOUNT(A, B, C). After receiving a trigger input (A), outputs are upcounted by C conditions. If the B inputs is 1, do not operate and display 0. If the B inputs is 0, operate. If the C parameter is 0, upcount when the input at A changes from 0 to 1. If the C parameter is 1, upcount when the input at A is changed from 1 to 0. If the C parameter is 2, upcount whenever the input at A changes. Output range is: 0-32767
28	DOWNCOUNT	Downcounts the pulses and then output the value- DOWNCOUNT(A, B, C). After receiving a trigger input (A), outputs are downcounted by C conditions. If the B input is 1, do not operate and display the initial value of C. If the B input is 0, operate. Downcounts when the A parameter changes from 0 to 1.

Note

The PI process block (PI_PROCESS Block) must be used after the PI control block (PI_CONTROL Block) for proper PI control operation. PI control operation cannot be performed if there is another block between the two blocks, or if the blocks are placed in an incorrect order.

Caution

User sequence features work only with code version 1.00, IO S/W version 0.11, and keypad S/W version 1.07 or higher versions.

4.23 Fire Mode Operation

This function is used to allow the inverter to ignore minor faults during emergency situations, such as fire, and provides continuous operation to fire pumps.

When turned on, Fire mode forces the inverter to ignore all minor fault trips and repeat a Reset and Restart for major fault trips, regardless of the restart trial count limit. The retry delay time set at PR. 10 (Retry Delay) still applies while the inverter performs a Reset and Restart.

Fire Mode Parameter Settings

Group	Code	Name	LCD Display	Parameter Setting		Setting Range	Unit
Ad	80	Fire Mode selection	Fire Mode Sel	1	Fire Mode	0–2	-
	81	Fire Mode frequency	Fire Mode Freq	0-60		0–60	
	82	Fire Mode run direction	Fire Mode Dir	0–1		0–1	
	83	Fire Mode operation count	Fire Mode Cnt	Not configurable		-	-
In	65–71	Px terminal configuration	Px Define (Px: P1– P7)	51	Fire Mode	0–54	-

The inverter runs in Fire mode when Ad. 80 (Fire Mode Sel) is set to '2 (Fire Mode)', and the multi-function terminal (In. 65-71) configured for Fire mode (51: Fire Mode) is turned on. The Fire mode count increases by 1 at Ad. 83 (Fire Mode Count) each time a Fire mode operation is run.

Caution

Fire mode operation may result in inverter malfunction. Note that Fire mode operation voids the product warranty – the inverter is covered by the product warranty only when the Fire mode count is '0.'

Fire Mode Function Setting Details

Code	Description	Details
Ad.81 Fire Mode frequency	Fire mode frequency reference	The frequency set at Ad. 81 (Fire mode frequency) is used for the inverter operation in Fire mode. The Fire mode frequency takes priority over the Jog frequency, Multi-step frequencies, and the keypad input frequency.
Dr.03 Acc Time / Dr.04 Dec Time	Fire mode Acc/Dec times	When Fire mode operation is turned on, the inverter accelerates for the time set at Dr.03 (Acc Time), and then decelerates based on the deceleration time set at Dr.04 (Dec Time). It stops when the Px terminal input is turned off (Fire mode operation is turned off).

Code	Description	Details
PR.10 Retry Delay	Fault trip process	Some fault trips are ignored during Fire mode operation. The fault trip history is saved, but trip outputs are disabled even when they are configured at the multi-function output terminals. **Fault trips that are ignored in Fire mode** BX, External Trip, Low Voltage Trip, Inverter Overheat, Inverter Overload, Overload, Electrical Thermal Trip, Input/Output Open Phase, Motor Overload, Fan Trip, No Motor Trips, and other minor fault trips. For the following fault trips, the inverter performs a Reset and Restart until the trip conditions are released. The retry delay time set at PR. 10 (Retry Delay) applies while the inverter performs a Reset and Restart. **Fault trips that force a Reset Restart in Fire mode** Over Voltage, Over Current1(OC1), Ground Fault Trip The inverter stops operating when the following fault trips occur: **Fault trips that stop inverter operation in Fire mode** H/W Diag, Over Current 2 (Arm-Short)

4.24 Improvement of output voltage drop

Improvement of the output voltage drop enables the output voltage operation command when the input voltage and overload settings are low to gain more output voltage and decrease the output current.

Parameter Setting for Improvement of Output Voltage Drop

Group	Code	Name	LCD Display	Parameter Setting		Setting Range	Unit
Ad	87	Overmodulation mode selection	OVM Mode Sel	0	No	0-1	-

Code	Description	Details
Ad.87 OVM Mode Sel	Overmodulation mode selection	Setting Ad.87 (Overmodulation mode selection) as “No” limits command voltage to linear output range. Setting Ad.87 (Overmodulation mode selection) as “Yes” allows for the output of overmodulation area, which extends the range of the command voltage. The output voltage command area will be enlarged for

Code	Description	Details
		more output voltage.

Caution

- Getting out of the linear range may cause waveform distortion.
- When the input voltage is higher than the motor-rated voltage, the motor output voltage may be higher than the rated voltage.
- The current value may vary quickly during a high-speed operation, but the current change amount will not increase by much.
- The compensation of the output voltage is less than the motor-rated voltage set in the parameter settings.
- Overmodulation mode does not operate when the input voltage is higher than the output voltage.

Memo

5 Learning Advanced Features

This chapter describes the advanced features of the S100 inverter. Parameter groups and codes are described based on 0.4-22kW models. For 30-75kW models, refer to *3.1.5 Control Menu* on page *64*. Check the reference page in the table to see the detailed description for each of the advanced features.

Advanced Tasks	Description	Ref.
Auxiliary frequency operation	Use the main and auxiliary frequencies in the predefined formulas to create various operating conditions. Auxiliary frequency operation is ideal for Draw Operation* as this feature enables fine-tuning of operation speeds.	p.162
Jog operation	Jog operation is a kind of a manual operation. The inverter operates to a set of parameter settings predefined for Jog operation, while the Jog command button is pressed.	p.166
Up-down operation	Uses the upper and lower limit value switch output signals (i.e. signals from a flow meter) as Acc/Dec commands to motors.	p.169
3-wire operation	3-wire operation is used to latch an input signal. This configuration is used to operate the inverter by a push button.	p.171
Safety operation mode	This safety feature allows the inverter's operation only after a signal is input to the multi-function terminal designated for the safety operation mode. This feature is useful when extra care is needed in operating the inverter using the multi-purpose terminals.	p.172
Dwell operation	Use this feature for the lift-type loads such as elevators, when the torque needs to be maintained while the brakes are applied or released.	p.174
Slip compensation	This feature ensures that the motor rotates at a constant speed, by compensating for the motor slip as a load increases.	p.176
PID control	PID control provides constant automated control of flow, pressure, and temperature by adjusting the output frequency of the inverter.	p.177
Auto-tuning	Used to automatically measure the motor control parameters to optimize the inverter's control mode performance.	p.185
Sensorless vector control	An efficient mode to control magnetic flux and torque without special sensors. Efficiency is achieved through the high torque characteristics at low current when compared with the V/F control mode.	p.189
Energy buffering operation	Used to maintain the DC link voltage for as long as possible by controlling the inverter output frequency during power interruptions, thus to delay a low voltage fault trip.	p.196
Energy saving operation	Used to save energy by reducing the voltage supplied to motors during low-load and no-load conditions.	p.209
Speed search operation	Used to prevent fault trips when the inverter voltage is output while the motor is idling or free-running.	p.212
Auto restart operation	Auto restart configuration is used to automatically restart the inverter when a trip condition is released, after the inverter	p.217

Advanced Tasks	Description	Ref.
	stops operating due to activation of protective devices (fault trips).	
Second motor operation	Used to switch equipment operation by connecting two motors to one inverter. Configure and operate the second motor using the terminal input defined for the second motor operation.	p.220
Commercial power source switch operation	Used to switch the power source to the motor from the inverter output to a commercial power source, or vice versa.	p.221
Cooling fan control	Used to control the cooling fan of the inverter.	p.222
Timer settings	Set the timer value and control the On/Off state of the multi-function output and relay.	p.232
Brake control	Used to control the On/Off operation of the load's electronic braking system.	p.233
Multi-function output On/Off control	Set standard values and turn On/Off the output relays or multi-function output terminals according to the analog input value.	p.234
Regeneration prevention for press operation.	Used during a press operation to avoid motor regeneration, by increasing the motor operation speed.	p.235

* Draw operation is an openloop tension control. This feature allows a constant tension to be applied to the material that is drawn by a motor-driven device, by fine-tuning the motor speed using operation frequencies that are proportional to a ratio of the main frequency reference.

5.1 Operating with Auxiliary References

Frequency references can be configured with various calculated conditions that use the main and auxiliary frequency references simultaneously. The main frequency reference is used as the operating frequency, while auxiliary references are used to modify and fine-tune the main reference.

Group	Code	Name	LCD Display	Parameter Setting		Setting Range	Unit
Operation	Frq	Frequency reference source	Freq Ref Src	0	Keypad-1	0–12	-
bA	01	Auxiliary frequency reference source	Aux Ref Src	1	V1	0–4	-
	02	Auxiliary frequency reference calculation type	Aux Calc Type	0	M+(G*A)	0–7	-
	03	Auxiliary frequency reference gain	Aux Ref Gain	0.0		-200.0–200.0	%
In	65–71	Px terminal configuration	Px Define	40	dis Aux Ref	0~54	-

The table above lists the available calculated conditions for the main and auxiliary frequency references. Refer to the table to see how the calculations apply to an example where the Frq code has been set to 0(Keypad-1), and the inverter is operating at a main reference frequency of 30.00Hz. Signals at -10 – +10V are received at terminal V1, with the reference gain set at 5%. In this example, the resulting frequency reference is fine-tuned within the range of 27.00-33.00Hz [Codes In.01-16 must be set to the default values, and In.06 (V1 Polarity), set to 1 (Bipolar)].

Auxiliary Reference Setting Details

<table>
<tr><th>Code</th><th>Description</th></tr>
<tr><td>bA.01 Aux Ref Src</td><td>Set the input type to be used for the auxiliary frequency reference.

<table>
<tr><th colspan="2">Configuration</th><th>Description</th></tr>
<tr><td>0</td><td>None</td><td>Auxiliary frequency reference is disabled.</td></tr>
<tr><td>1</td><td>V1</td><td>Sets the V1 (voltage) terminal at the control terminal block as the source of auxiliary frequency reference.</td></tr>
<tr><td>3</td><td>V2</td><td>Sets the V2 (voltage) terminal at the control terminal block as the source of auxiliary frequency reference (SW2 must be set to “voltage”).</td></tr>
<tr><td>4</td><td>I2</td><td>Sets the I2 (current) terminal at the control terminal block as the source of auxiliary frequency reference (SW2 must be set to “current”).</td></tr>
<tr><td>5</td><td>Pulse</td><td>Sets the TI (pulse) terminal at the control terminal block as the source of auxiliary frequency reference.</td></tr>
</table>
</td></tr>
</table>

<table>
<tr><th>Code</th><th>Description</th></tr>
<tr><td>bA.02 Aux Calc Type</td><td>Set the auxiliary reference gain with bA.03 (Aux Ref Gain) to configure the auxiliary reference and set the percentage to be reflected when calculating the main reference. Note that items 4–7 below may result in either plus (+) or minus (-) references (forward or reverse operation) even when unipolar analog inputs are used.

<table>
<tr><th colspan="2">Configuration</th><th>Formula for frequency reference</th></tr>
<tr><td>0</td><td>M+(G*A)</td><td>Main reference+(bA.03xbA.01xIn.01)</td></tr>
<tr><td>1</td><td>M*(G*A)</td><td>x(bA.03xbA.01)</td></tr>
<tr><td>2</td><td>M/(G*A)</td><td>Main reference/(bA.03xbA.01)</td></tr>
<tr><td>3</td><td>M+{M*(G*A)}</td><td>Main reference+{Main reference x(bA.03xbA.01)}</td></tr>
<tr><td>4</td><td>M+G*2*(A-50)</td><td>Main reference+bA.03x2x(bA.01-50)x In.01</td></tr>
<tr><td>5</td><td>M*{G*2*(A-50)}</td><td>Main reference x{bA.03x2x(bA.01-50)}</td></tr>
<tr><td>6</td><td>M/{G*2*(A-50)}</td><td>Main reference/{bA.03x2x(bA.01-50)}</td></tr>
<tr><td>7</td><td>M+M*G*2*(A-50)</td><td>Main reference+Main reference x bA.03x2x(bA.01-50)</td></tr>
</table>
M: Main frequency reference (Hz or rpm)
G: Auxiliary reference gain (%)
A: Auxiliary frequency reference (Hz or rpm) or gain (%)</td></tr>
<tr><td>bA.03 Aux Ref Gain</td><td>Adjust the size of the input (bA.01 Aux Ref Src) configured for auxiliary frequency.</td></tr>
<tr><td>In.65–71 Px Define</td><td>Set one of the multi-function input terminals to 40(dis Aux Ref) and turn it on to disable the auxiliary frequency reference. The inverter will operate using the main frequency reference only.</td></tr>
</table>

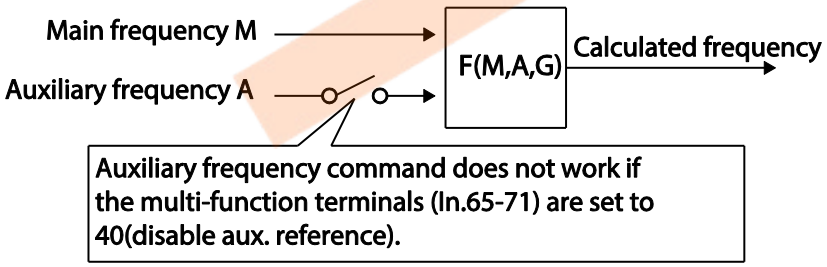

Auxiliary Reference Operation Ex #1

Keypad Frequency Setting is Main Frequency and V1 Analog Voltage is Auxiliary Frequency

- Main frequency: Keypad (operation frequency 30Hz)
- Maximum frequency setting (dr.20): 400Hz
- Auxiliary frequency setting (bA.01): V1[Display by percentage(%) or auxiliary frequency (Hz) depending on the operation setting condition]
- Auxiliary reference gain setting (bA.03): 50%
- In.01–32: Factory default

Example: an input voltage of 6V is supplied to V1, and the frequency corresponding to 10V is 60Hz. The table below shows the auxiliary frequency A as 36Hz[=60Hz X (6V/10V)] or 60%[= 100% X (6V/10V)].

Setting*		Calculating final command frequency**
0	M[Hz]+(G[%]*A[Hz])	30Hz(M)+(50%(G)x36Hz(A))=48Hz
1	M[Hz]*(G[%]*A[%])	30Hz(M)x(50%(G)x60%(A))=9Hz
2	M[Hz]/(G[%]*A[%])	30Hz(M)/(50%(G)x60%(A))=100Hz
3	M[Hz]+{M[Hz]*(G[%]*A[%])}	30Hz(M)+{30[Hz]x(50%(G)x60%(A))}=39Hz
4	M[Hz]+G[%]*2*(A[%]-50[%])[Hz]	30Hz(M)+50%(G)x2x(60%(A)–50%)x60Hz=36Hz
5	M[HZ]*{G[%]*2*(A[%]-50[%])}	30Hz(M)x{50%(G)x2x(60%(A)–50%)}=3Hz
6	M[HZ]/{G[%]*2*(A[%]-50[%])}	30Hz(M)/{50%(G)x2x(60%–50%)}=300Hz
7	M[HZ]+M[HZ]*G[%]*2*(A[%]-50[%])	30Hz(M)+30Hz(M)x50%(G)x2x(60%(A)–50%)=33Hz

*M: main frequency reference (Hz or rpm)/G: auxiliary reference gain (%)/A: auxiliary frequency reference (Hz or rpm) or gain (%).

**If the frequency setting is changed to rpm, it is converted to rpm instead of Hz.

Auxiliary Reference Operation Ex #2

Keypad Frequency Setting is Main Frequency and I2 Analog Voltage is Auxiliary Frequency

- Main frequency: Keypad (Operation frequency 30Hz)
- Maximum frequency setting (dr.20): 400Hz
- Auxiliary frequency setting (bA.01): I2 [Display by percentage(%) or auxiliary frequency(Hz) depending on the operation setting condition]
- Auxiliary reference gain setting (bA.03): 50%
- In.01–32: Factory default

Example: an input current of 10.4mA is applied to I2, with the frequency corresponding to 20mA of 60Hz. The table below shows auxiliary frequency A as 24Hz(=60[Hz] X {(10.4[mA]-4[mA])/(20[mA] - 4[mA])} or 40%(=100[%] X {(10.4[mA] - 4[mA])/(20[mA] - 4[mA])}.

Setting*		Calculating final command frequency**
0	M[Hz]+(G[%]*A[Hz])	30Hz(M)+(50%(G)x24Hz(A))=42Hz
1	M[Hz]*(G[%]*A[%])	30Hz(M)x(50%(G)x40%(A))=6Hz
2	M[Hz]/(G[%]*A[%])	30Hz(M)/(50%(G)x40%(A))=150Hz
3	M[Hz]+{M[Hz]*(G[%]*A[%])}	30Hz(M)+{30[Hz]x(50%(G)x40%(A))}=36Hz
4	M[Hz]+G[%]*2*(A[%]-50[%])[Hz]	30Hz(M)+50%(G)x2x(40%(A)–50%)x60Hz=24Hz
5	M[HZ]*{G[%]*2*(A[%]-50[%])	30Hz(M)x{50%(G)x2x(40%(A)-50%)} = -3Hz(Reverse)
6	M[HZ]/{G[%]*2*(A[%]-50[%])}	30Hz(M)/{50%(G)x2x(60%-40%)} = -300Hz(Reverse)
7	M[HZ]+M[HZ]*G[%]*2*(A[%]-50[%])	30Hz(M)+30Hz(M)x50%(G)x2x (40%(A)–50%)=27Hz

* M: main frequency reference (Hz or rpm)/G: auxiliary reference gain (%)/A: auxiliary frequency reference Hz or rpm) or gain (%).

**If the frequency setting is changed to rpm, it is converted to rpm instead of Hz.

Auxiliary Reference Operation Ex #3

V1 is Main Frequency and I2 is Auxiliary Frequency

- Main frequency: V1 (frequency command setting to 5V and is set to 30Hz)
- Maximum frequency setting (dr.20): 400Hz
- Auxiliary frequency (bA.01): I2[Display by percentage (%) or auxiliary frequency (Hz) depending on the operation setting condition]
- Auxiliary reference gain (bA.03): 50%
- In.01–32: Factory default

Example: an input current of 10.4mA is applied to I2, with the frequency corresponding to 20mA of 60Hz. The table below shows auxiliary frequency Aas 24Hz(=60[Hz]x{(10.4[mA]-4[mA])/(20[mA]-4[mA])} or 40%(=100[%] x {(10.4[mA] - 4[mA]) /(20 [mA] - 4[mA])}.

Setting*		Calculating final command frequency**
0	M[Hz]+(G[%]*A[Hz])	30Hz(M)+(50%(G)x24Hz(A))=42Hz
1	M[Hz]*(G[%]*A[%])	30Hz(M)x(50%(G)x40%(A))=6Hz
2	M[Hz]/(G[%]*A[%])	30Hz(M)/(50%(G)x40%(A))=150Hz
3	M[Hz]+{M[Hz]*(G[%]*A[%])}	30Hz(M)+{30[Hz]x(50%(G)x40%(A))}=36Hz
4	M[Hz]+G[%]*2*(A[%]-50[%])[Hz]	30Hz(M)+50%(G)x2x(40%(A)–

		50%)x60Hz=24Hz
5	M[HZ]*{G[%]*2*(A[%]-50[%])}	30Hz(M)x{50%(G)x2x(40%(A)-50%)}=-3Hz(Reverse)
6	M[HZ]/{G[%]*2*(A[%]-50[%])}	30Hz(M)/{50%(G)x2x(60%-40%)}=-300Hz(Reverse)
7	M[HZ]+M[HZ]*G[%]*2*(A[%]-50[%])	30Hz(M)+30Hz(M)x50%(G)x2x(40%(A)–50%)=27Hz

* M: main frequency reference (Hz or rpm)/G: auxiliary reference gain (%)/A: auxiliary frequency reference (Hz or rpm) or gain (%).

**If the frequency setting is changed to rpm, it is converted to rpm instead of Hz.

Note

When the maximum frequency value is high, output frequency deviation may result due to analog input variation and deviations in the calculations.

5.2 Jog operation

The jog operation allows for a temporary control of the inverter. You can enter a jog operation command using the multi-function terminals or by using the [ESC] key on the keypad.

The jog operation is the second highest priority operation, after the dwell operation. If a jog operation is requested while operating the multi-step, up-down, or 3-wire operation modes, the jog operation overrides all other operation modes.

5.2.1 Jog Operation 1-Forward Jog by Multi-function Terminal

The jog operation is available in either forward or reverse direction, using the keypad or multi-function terminal inputs. The table below lists parameter setting for a forward jog operation using the multi-function terminal inputs.

Group	Code	Name	LCD Display	Parameter Setting		Setting Range	Unit
dr	11	Jog frequency	JOG Frequency	10.00		0.50-Maximum frequency	Hz
	12	Jog operation acceleration time	JOG Acc Time	20.00		0.00-600.00	sec
	13	Jog operation deceleration time	JOG Dec Time	30.00		0.00-600.00	sec
In	65-71	Px terminal configuration	Px Define (Px: P1–P7)	6	JOG	-	-

Forward Jog Description Details

Code	Description
In.65–71 Px Define	Select the jog frequency from P1- P7 and then select 6. Jog from In.65-71. 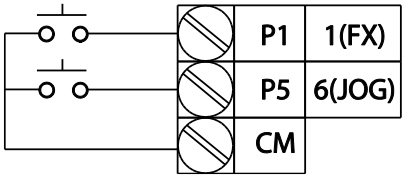 [Terminal settings for jog operation]
dr.11 JOG Frequency	Set the operation frequency.
dr.12 JOG Acc Time	Set the acceleration speed.
dr.13 JOG Dec Time	Set the deceleration speed.

If a signal is entered at the jog terminal while an FX operation command is on, the operation frequency changes to the jog frequency and the jog operation begins.

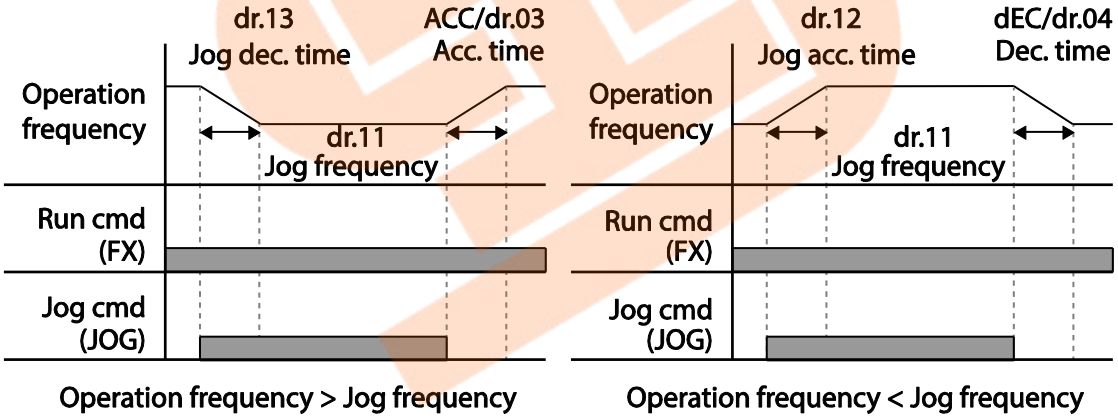

5.2.2 Jog Operation 2-Fwd/Rev Jog by Multi-function Terminal

For jog operation 1, an operation command must be entered to start operation, but while using jog operation 2, a terminal that is set for a forward or reverse jog also starts an operation. The priorities for frequency, Acc/Dec time and terminal block input during operation in relation to other operating modes (Dwell, 3-wire, up/down, etc.) are identical to jog operation 1. If a different operation command is entered during a jog operation, it is ignored and the operation maintains the jog frequency.

Group	Code	Name	LCD Display	Parameter setting		Setting Range	Unit
dr	11	Jog frequency	JOG Frequency	10.00		0.50-Maximum frequency	Hz
	12	Jog operation acceleration time	JOG Acc Time	20.00		0.00-600.00	sec
	13	Operation deceleration time	JOG Dec Time	30.00		0.00-600.00	sec
In	65-71	Px terminal configuration	Px Define (Px: P1-P7)	46	FWD JOG	-	-
				47	REV JOG		

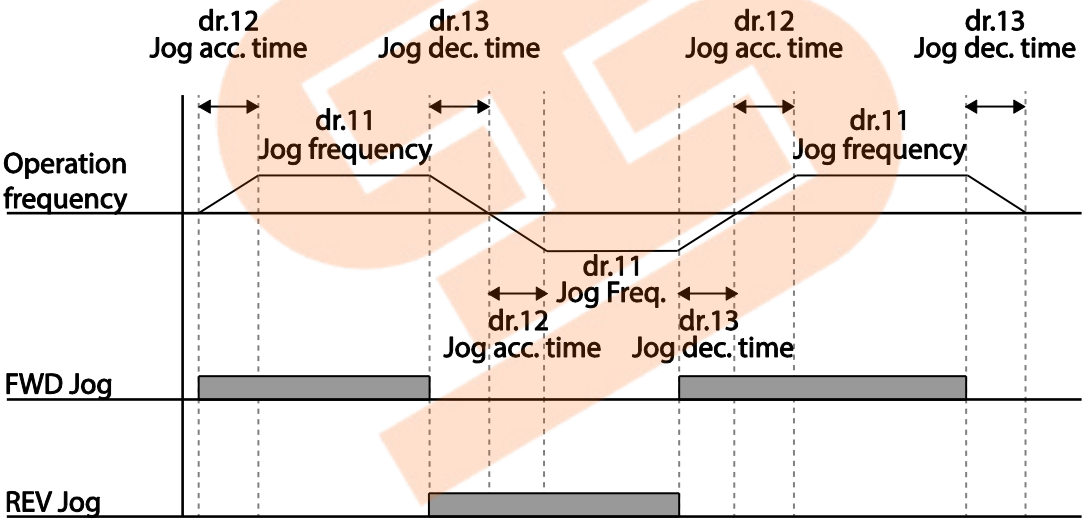

5.2.3 Jog Operation by Keypad

Group	Code	Name	LCD Display	Parameter Setting		Setting Range	Unit
Dr	90	[ESC] key functions	-	1	JOG Key	-	-
	06	Command source	Cmd Source*	0	Keypad	-	-

* Displayed under DRV-06 on the LCD keypad.

Set dr.90 to 1(JOG Key) and set the drv code in the Operation group to 0(Keypad). When the [ESC] key is pressed, the SET display light flashes and the jog operation is ready to start. Pressing the [RUN] key starts the operation and the inverter accelerates or decelerates to the designated jog frequency. Releasing the [RUN] key stops the jog operation. Set the Acc/Dec time for the jog operation frequency at dr.12 and dr.13.

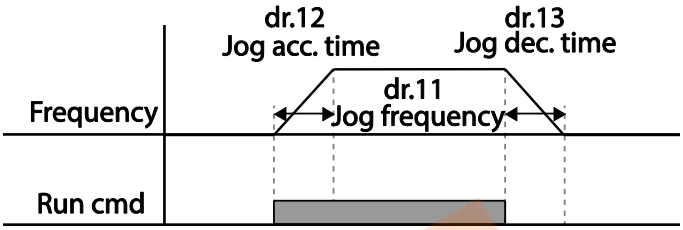

5.3 Up-down Operation

The Acc/Dec time can be controlled through input at the multi-function terminal block. Similar to a flowmeter, the up-down operation can be applied easily to a system that uses the upper-lower limit switch signals for Acc/Dec commands.

Group	Code	Name	LCD Display	Parameter Setting		Setting Range	Unit
Ad	65	Up-down operation frequency save	U/D Save Mode	1	Yes	0-1	-
Ad	85	Up-down operation mode	U/D Mode Sel	0	U/D Normal	0-2	
				1	U/D Step		
				2	U/D Step+Norm		
Ad	86	Up-down step frequency	U/D Step Freq	0		0-Maximum frequency	Hz
In	65-71	Px terminal configuration	Px Define (Px: P1-P7)	17	Up	-	-
				18	Down		
				20	U/D Clear		

Up-down Normal Operation Setting Details

Code	Description
In.65-71 Px Define	Select two terminals for up-down operation and set them to 17 (Up) and 18 (Down), respectively. With the operation command input, acceleration begins when the Up terminal signal is on. Acceleration stops and constant speed operation begins when the signal is off. During operation, deceleration begins when the Down signal is on. Deceleration stops and constant speed operation begins when both Up and Down signals are entered at the same time. 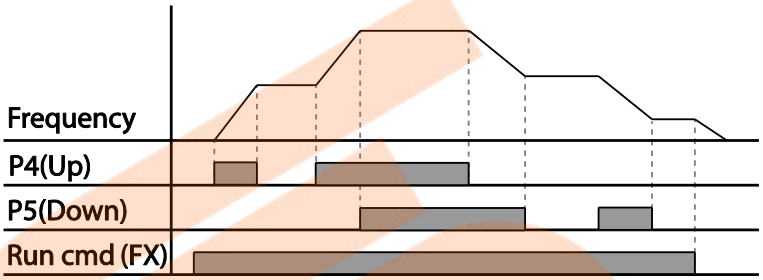
Ad.65 U/D Save Mode	During a constant speed operation, the operating frequency is saved automatically in the following conditions: the operation command (Fx or Rx) is off, a fault trip occurs, or the power is off. When the operation command is turned on again, or when the inverter regains the power source or resumes to a normal operation from a fault trip, it resumes operation at the saved frequency. To delete the saved frequency, use the multi-function terminal block. Set one of the multi-function terminals to 20 (U/D Clear) and apply signals to it during constant speed operation. The saved frequency and the up-down operation configuration will be deleted. 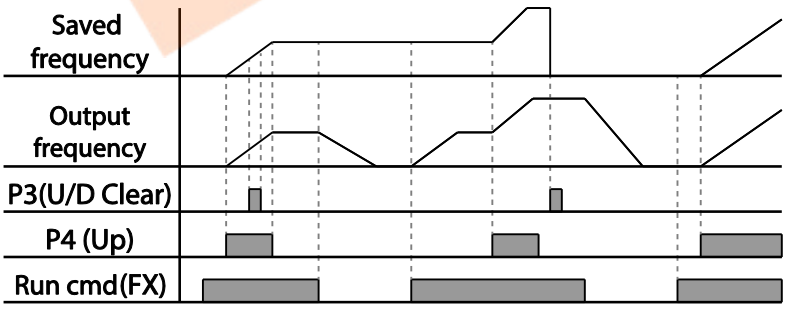

Up-Down Mode Selection

<table>
<tr><th>Code</th><th>Description</th></tr>
<tr><td>Ad.85 U/D Mode Sel</td><td>Select up-down operation mode.
<table>
<tr><th colspan="2">Setting</th><th>Function</th></tr>
<tr><td>0</td><td>U/D Normal</td><td>Pressing the Up button increases the frequency to the maximum setting at a preset acceleration time. Pressing the Down button decreases the frequency to a preset deceleration speed, regardless of stop mode.</td></tr>
<tr><td>1</td><td>U/D Step</td><td>Accelerate or decelerate according to the step frequency set in Ad.86 on the ascending edge of the multi-function input set for up-down operation mode.</td></tr>
<tr><td>2</td><td>U/D Step+Norm</td><td>Accelerate or decelerate according to the step frequency set in Ad.86 on the ascending edge of the multi-function input set for up-down operation mode. If acceleration or deceleration is activated more than 3 seconds, the operation settings will change to up-down normal mode.</td></tr>
</table>
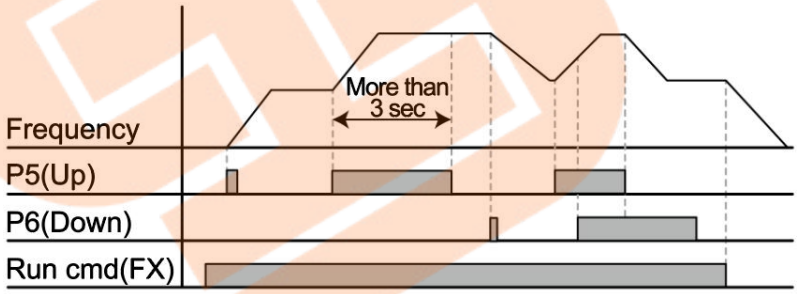

<1: U/D Step>


<2: U/D Step+Norm></td></tr>
<tr><td>Ad.86 U/D Step Freq</td><td>Set the frequency value to increase or decrease based on the up or down input.</td></tr>
</table>

5.4 3-Wire Operation

The 3-wire operation latches the signal input (the signal stays on after the button is released), and is used when operating the inverter with a push button.

Group	Code	Name	LCD Display	Parameter Setting		Setting Range	Unit
Operation	drv	Command source	Cmd Source*	1	Fx/Rx - 1	-	-
In	65-71	Px terminal configuration	Px Define (Px: P1-P7)	14	3-Wire	0~54	-

* Displayed under DRV-06 in an LCD keypad.

To enable the 3-wire operation, the following circuit sequence is necessary. The minimum input time (t) for 3-wire operation is 1ms, and the operation stops when both forward and reverse operation commands are entered at the same time.

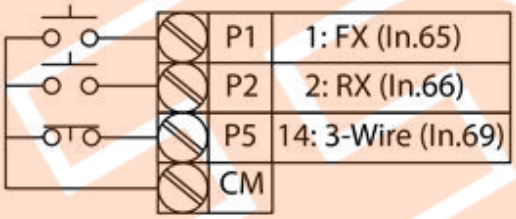

[Terminal connections for 3-wire operation]

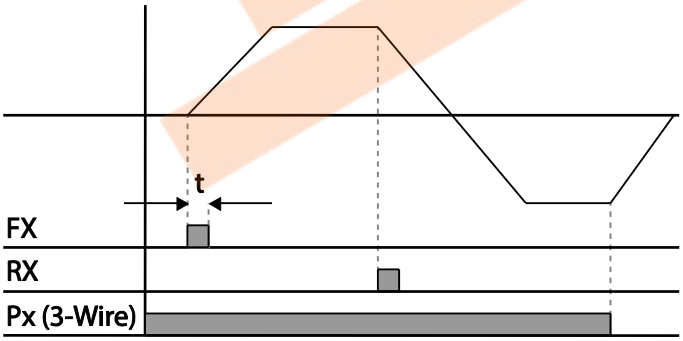

[3-wire operation]

5.5 Safe Operation Mode

When the multi-function terminals are configured to operate in safe mode, operation commands can be entered in the Safe operation mode only. Safe operation mode is used

to safely and carefully control the inverter through the multi-function terminals.

Group	Code	Name	LCD Display	Parameter Setting		Setting Range	Unit
Ad	70	Safe operation selection	Run En Mode	1	DI Dependent	-	-
	71	Safe operation stop mode	Run Dis Stop	0	Free-Run	0-2	-
	72	Safe operation deceleration time	Q-Stop Time	5.0		0.0-600.0	sec
In	65-69	Px terminal configuration	Px Define (Px: P1-P5)	13	RUN Enable	-	-

Safe Operation Mode Setting Details

<table>
<tr><th>Code</th><th>Description</th></tr>
<tr><td>In.65–69 Px Define</td><td>From the multi-function terminals, select a terminal to operate in safe operation mode and set it to 13 (RUN Enable).</td></tr>
<tr><td>Ad.70 Run En Mode</td><td>
<table>
<tr><th colspan="2">Setting</th><th>Function</th></tr>
<tr><td>0</td><td>Always Enable</td><td>Enables safe operation mode.</td></tr>
<tr><td>1</td><td>DI Dependent</td><td>Recognizes the operation command from a multi-function input terminal.</td></tr>
</table>
</td></tr>
<tr><td>Ad.71 Run Dis Stop</td><td>Set the operation of the inverter when the multi-function input terminal in safe operation mode is off.
<table>
<tr><th colspan="2">Setting</th><th>Function</th></tr>
<tr><td>1</td><td>Free-Run</td><td>Blocks the inverter output when the multi-function terminal is off.</td></tr>
<tr><td>2</td><td>Q-Stop</td><td>The deceleration time (Q-Stop Time) used in safe operation mode. It stops after deceleration, allowing the operation to resume but only after the operation command is re-entered. The operation will not begin if only the multi-function terminal is on.</td></tr>
<tr><td>3</td><td>Q-Stop Resume</td><td>The inverter decelerates to the deceleration time (Q-Stop Time) in safe operation mode and stops. If the multi-function terminal is on, the operation resumes as soon as the operation command ‘On’ is entered again.</td></tr>
</table>
</td></tr>
<tr><td>Ad.72 Q-Stop Time</td><td>Sets the deceleration time when Ad.71 (Run Dis Stop) is set to 1 (Q-Stop) or 2 (Q-Stop Resume).</td></tr>
</table>

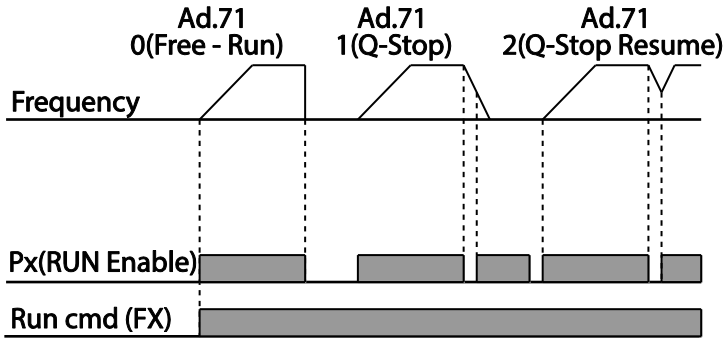

5.6 Dwell Operation

The dwell operation is used to manitain torque during the application and release of the brakes on lift-type loads. Inverter dwell operation is based on the Acc/Dec dwell frequency and the dwell time set by the user. The following points also affect dwell operation:

- **Acceleration Dwell Operation:** When an operation command runs, acceleration continues until the acceleration dwell frequency and constant speed is reached within the acceleration dwell operation time (Acc Dwell Time). After the Acc Dwell Time has passed, acceleration is carried out based on the acceleration time and the operation speed that was originally set.
- **Deceleration Dwell Operation**: When a stop command is run, deceleration continues until the deceleration dwell frequency and constant speed is reached within the deceleration dwell operation time (Dec Dwell Freq). After the set time has passed, deceleration is carried out based on the deceleration time that was originally set, then the operation stops.

When dr.09 (Control Mode) is set to 0 (V/F), the inverter can be used for operations with dwell frequency before opening the mechanical brake of lift-type loads, such as an elevator.

Group	Code	Name	LCD Display	Parameter Setting	Setting Range	Unit
Ad	20	Dwell frequency during acceleration	Acc Dwell Freq	5.00	Start frequency – Maximum frequency	Hz
	21	Operation time during acceleration	Acc Dwell Time	0.0	0.0–10.0	s
	22	Dwell frequency during deceleration	Dec Dwell Freq	5.00	Start frequency – Maximum frequency	Hz
	23	Operation time during deceleration	Dec Dwell Time	0.0	0 .0-60.0	s

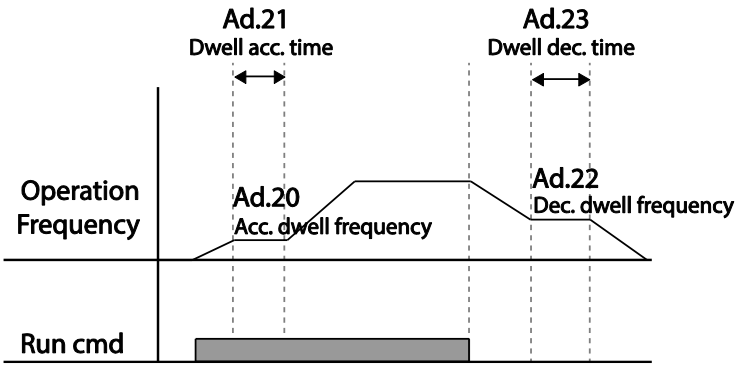

Note

Dwell operation does not work when:

- Dwell operation time is set to 0 sec or dwell frequency is set to 0 Hz.
- Re-acceleration is attempted from stop or during deceleration, as only the first acceleration dwell operation command is valid.

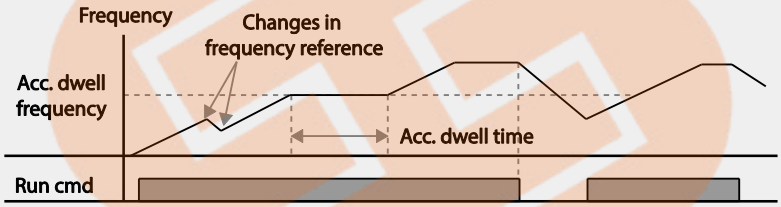

[Acceleration dwell operation]

- Although deceleration dwell operation is carried out whenever stop commands are entered and the deceleration dwell frequency is passed through, it does not work during a deceleration by simple frequency change (which is not a deceleration due to a stop operation), or during external brake control applications.

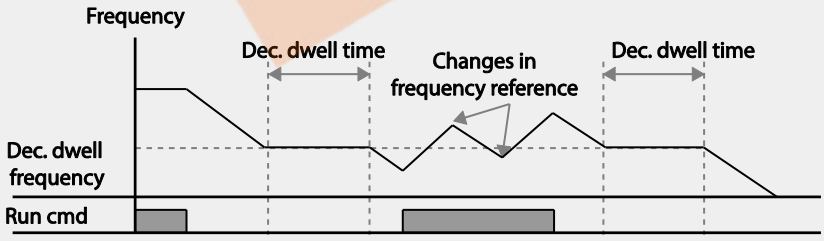

[Deceleration dwell operation]

Caution

When a dwell operation is carried out for a lift - type load before its mechanical brake is released, motors can be damaged or their lifecyle reduced due to overflow current in the motor.

5.7 Slip Compensation Operation

Slip refers to the variation between the setting frequency (synchronous speed) and motor rotation speed. As the load increases there can be variations between the setting frequency and motor rotation speed. Slip compensation is used for loads that require compensation of these speed variations.

Group	Code	Name	LCD Display	Parameter Setting		Setting Range	Unit
dr	09	Control mode	Control Mode	2	Slip Compen	-	-
	14	Motor capacity	Motor Capacity	2	0.75 kW (0.75kW based)	0-15	-
bA	11	Number of motor poles	Pole Number	4		2-48	-
	12	Rated slip speed	Rated Slip	90 (0.75kW based)		0-3000	rpm
	13	Rated motor current	Rated Curr	3.6 (0.75kW based)		1.0-1000.0	A
	14	Motor no-load current	Noload Curr	1.6 (0.75kW based)		0.5-1000.0	A
	16	Motor efficiency	Efficiency	72 (0.75kW based)		64-100	%
	17	Load inertia rate	Inertia Rate	0 (0.75kW based)		0-8	-

Slip Compensation Operation Setting Details

Code	Description
dr.09 Control Mode	Set dr.09 to 2 (Slip Compen) to carry out the slip compensation operation.
dr.14 Motor Capacity	Set the capacity of the motor connected to the inverter.
bA.11 Pole Number	Enter the number of poles from the motor rating plate.
bA.12 Rated Slip	Enter the number of [Rated Motor Speed – Motor Nameplate Speed]. ※ $\text{Rated Motor Speed [rpm]} = \frac{120 \times f_r}{P}$ - f_r= Rated frequency, P= Number of motor poles
bA.13 Rated Curr	Enter the rated current from the motor rating plate.
bA.14 Noload Curr	Enter the measured current when the load on the motor axis is removed and when the motor is operated at the rated frequency. If no-load current is difficult to measure, enter a current equivalent to 30-50% of the rated motor current.
bA.16 Efficiency	Enter the efficiency from the motor rating place.
bA.17 Inertia Rate	Select load inertia based on motor inertia.

Setting	Function
0	Less than 10 times motor inertia
1	10 times motor inertia
2-8	More than 10 times motor inertia

Code	Description
	$f_s = f_r - \frac{Rpm \times P}{120}$ f_s=Rated slip frequency f_r=Rated frequency rpm=Number of the rated motor rotations P=Number of motor poles

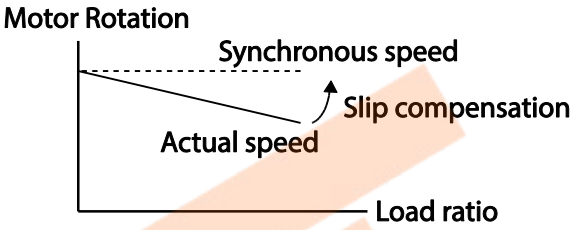

5.8 PID Control

Pid control is one of the most common auto-control methods. It uses a combination of proportional, integral, and differential (PID) control that provides more effective control for automated systems. The functions of PID control that can be applied to the inverter operation are as follows:

Purpose	Function
Speed control	Controls speed by using feedback about the existing speed level of the equipment or machinery to be controlled. Control maintains consistent speed or operates at the target speed.
Pressure control	Controls pressure by using feedback about the existing pressure level of the equipment or machinery to be controlled. Control maintains consistent pressure or operates at the target pressure.
Flow control	Controls flow by using feedback about the amount of existing flow in the equipment or machinery to be controlled. Control maintains consistent flow or operates at a target flow.
Temperature control	Controls temperature by using feedback about the existing temperature level of the equipment or machinery to be controlled. Control maintains a consistent temperature or operates at a target termperature.

5.8.1 PID Basic Operation

PID operates by controlling the output frequency of the inverter, through automated system process control to maintain speed, pressure, flow, temperature and tension.

Group	Code	Name	LCD Display	Parameter Setting		Setting Range	Unit
AP	01	Application function selection	App Mode	2	Proc PID	0–2	-
	16	PID output monitor	PID Output	-		-	-
	17	PID reference monitor	PID Ref Value	-		-	-
	18	PID feedback monitor	PID Fdb Value	-		-	-
	19	PID reference setting	PID Ref Set	50.00		-100.00-100.00	%
	20	PID reference source	PID Ref Source	0	Keypad	0-11	-
	21	PID feedback source	PID F/B Source	0	V1	0-10	-
	22	PID controller proportional gain	PID P-Gain	50.0		0.0-1000.0	%
	23	PID controller integral time	PID I-Time	10.0		0.0-200.0	sec
	24	PID controller differential time	PID D-Time	0		0-1000	msec
	25	PID controller feed-forward compensation gain	PID F-Gain	0.0		0-1000	%
	26	Proportional gain scale	P Gain Scale	100.0		0.0-100.0	%
	27	PID output filter	PID Out LPF	0		0-10000	ms
	29	PID maximum frequency	PID Limit Hi	60.00		-300.00-300.00	Hz
	30	PID minimum frequency	PID Limit Lo	0.5		-300.00-300.00	Hz
	31	PID output reverse	PID Out Inv	0	No	0-1	-
	32	PID output scale	PID Out Scale	100.0		0.1-1000.0	%
	34	PID controller motion frequency	Pre-PID Freq	0.00		0–Maximum frequency	Hz
	35	PID controller motion level	Pre-PID Exit	0.0		0.0-100.0	%
	36	PID controller motion delay time	Pre-PID Delay	600		0-9999	sec
	37	PID sleep mode delay time	PID Sleep DT	60.0		0-999.9	sec
	38	PID sleep mode frequency	PID Sleep Freq	0.00		0–Maximum frequency	Hz
	39	PID wake-up level	PID WakeUp Lev	35		0-100	%
	40	PID wake-up mode selection	PID WakeUp Mod	0	Below Level	0-2	-

Group	Code	Name	LCD Display	Parameter Setting		Setting Range	Unit
	42	PID controller unit selection	PID Unit Sel	0	%	0-12	-
	43	PID unit gain	PID Unit Gain	100.0		0-300	%
	44	PID unit scale	PID Unit Scale	2	x 1	0-4	-
	45	PID 2nd proportional gain	PID P2-Gain	100.00		0-1000	%
In	65-71	Px terminal configuration	Px Define (Px: P1-P7)	22	I-Term Clear	-	-
				23	PID Openloop		
				24	P Gain2		

Note

When the PID switch operation (switching from PID operation to general operation) enters the multi-function input, [%] values are converted to [Hz] values. The normal PID output, PID OUT, is unipolar, and is limited by AP.29 (PID Limit Hi) and AP.30 (PID Limit Lo). A calculation of 100.0% is based on the dr.20 (Max Freq) parameter setting.

PID Basic Operation Setting Details

Code	Description
AP.01 App Mode	Set the code to 2 (Proc PID) to select functions for the process PID.
AP.16 PID Output	Displays the existing output value of the PID controller. The unit, gain, and scale that were set at AP. 42-44 are applied on the display.
AP.17 PID Ref Value	Displays the existing reference value set for the PID controller. The unit, gain, and scale that were set at AP. 42-44 are applied on the display.
AP.18 PID Fdb Value	Displays the input value of the PID controller that is included in the latest feedback. The unit, gain, and scale that were set at AP. 42-44 are applied on the display.
AP.19 PID Ref Set	When AP.20 (PID control reference source) is set to 0 (Keypad), the reference value can be entered. If the reference source is set to any other value, the setting values for AP.19 are void.

<table>
<tr><th>Code</th><th>Description</th></tr>
<tr><td>AP.20 PID Ref Source</td><td>Selects the reference input for the PID control. If the V1 terminal is set to PID feedback source (PID F/B Source), the V1 terminal cannot be set to the PID reference source (PID Ref Source). To set V1 as a reference source, change the feedback source.
<table>
<tr><th colspan="2">Setting</th><th>Function</th></tr>
<tr><td>0</td><td>Keypad</td><td>Keypad</td></tr>
<tr><td>1</td><td>V1</td><td>-10-10V input voltage terminal</td></tr>
<tr><td>3</td><td>V2</td><td rowspan="2">I2 analog input terminal
[When analog voltage/current input terminal selection switch (SW2) at the terminal block is set to I (current), input 4-20mA current. If it is set to V (voltage), input 0–10V voltage]</td></tr>
<tr><td>4</td><td>I2</td></tr>
<tr><td>5</td><td>Int. 485</td><td>RS-485 input terminal</td></tr>
<tr><td>7</td><td>FieldBus</td><td>Communication command via a communication option card</td></tr>
<tr><td>9</td><td>UserSeqLink</td><td>Link the common area with the user sequence output.</td></tr>
<tr><td>11</td><td>Pulse</td><td>TI Pulse input terminal (0-32kHz Pulse input)</td></tr>
</table>
When using the keypad, the PID reference setting can be displayed at AP.17. When using the LDC keypad, the PID reference setting can be monitored from the config mode (CNF) -06-08, set to 17 (PID Ref Value).</td></tr>
<tr><td>AP.21 PID F/B Source</td><td>Selects feedback input for PID control. Items can be selected as reference input, except the keypad input (Keypad-1 and Keypad-2). Feedback cannot be set to an input item that is identical to the item selected as the reference. For example, when Ap.20 (Ref Source) is set to 1 (V1), for AP. 21 (PID F/B Source), an input other than the V1 terminal must be selected. When using the LCD keypad, the volume of feedback can be monitored using a code from the config mode (CNF) -06-08, by setting it to 18 (PID Fbk Value).</td></tr>
<tr><td>AP.22 PID P-Gain, AP.26 P Gain Scale</td><td>Sets the output ratio for differences (errors) between reference and feedback. If the Pgain is set to 50%, then 50% of the error is output. The setting range for Pgain is 0.0-1,000%. For ratios below 0.1%, use AP.26 (P Gain Scale).</td></tr>
<tr><td>AP.23 PID I- Time</td><td>Sets the time to output accumulated errors. When the error is 100%, the time taken for 100% output is set. When the integral time (PID I-Time) is set to 1 second, 100% output occurs after 1 second of the error remaining at 100%. Differences in a normal state can be reduced by PID I Time. When the multi-function terminal block is set to 21(I-Term Clear) and is turned on, all of the accumulated errors are deleted.</td></tr>
<tr><td>AP.24 PID D-Time</td><td>Sets the output volume for the rate of change in errors. If the differential time (PID D-Time) is set to 1ms and the rate of change in errors per sec is 100%, output occurs at 1% per 10ms.</td></tr>
</table>

<table>
<tr><th>Code</th><th>Description</th></tr>
<tr><td>AP.25 PID F-Gain</td><td>Sets the ratio that adds the target to the PID output. Adjusting this value leads to a faster response.</td></tr>
<tr><td>AP.27 PID Out LPF</td><td>Used when the output of the PID controller changes too fast or the entire system is unstable, due to severe oscillation. In general, a lower value (default value=0) is used to speed up response time, but in some cases a higher value increases stability. The higher the value, the more stable the PID controller output is, but the slower the response time.</td></tr>
<tr><td>AP.29 PID Limit Hi, AP.30 PID Limit Lo</td><td>Limits the output of the controller.</td></tr>
<tr><td>AP.32 PID Out Scale</td><td>Adjusts the volume of the controller output.</td></tr>
<tr><td>AP.42 PID Unit Sel</td><td>Sets the unit of the control variable (available only on the LCD keypad).
<table>
<tr><th colspan="2">Setting</th><th>Function</th></tr>
<tr><td>0</td><td>%</td><td>Displays a percentage without a physical quantity given.</td></tr>
<tr><td>1</td><td>Bar</td><td rowspan="4">Various units of pressure can be selected.</td></tr>
<tr><td>2</td><td>mBar</td></tr>
<tr><td>3</td><td>Pa</td></tr>
<tr><td>4</td><td>kPa</td></tr>
<tr><td>5</td><td>Hz</td><td rowspan="2">Displays the inverter output frequency or the motor rotation speed.</td></tr>
<tr><td>6</td><td>rpm</td></tr>
<tr><td>7</td><td>V</td><td rowspan="4">Displays in voltage/current/power/horsepower.</td></tr>
<tr><td>8</td><td>I</td></tr>
<tr><td>9</td><td>kW</td></tr>
<tr><td>10</td><td>HP</td></tr>
<tr><td>11</td><td>°C</td><td rowspan="2">Displays in Celsius or Fahrenheit.</td></tr>
<tr><td>12</td><td>°F</td></tr>
<tr><td>13</td><td>CUST</td><td rowspan="4">Various units can be selected.</td></tr>
<tr><td>14</td><td>PSI</td></tr>
<tr><td>15</td><td>inWC</td></tr>
<tr><td>16</td><td>gl/m</td></tr>
</table></td></tr>
<tr><td>AP.43 PID Unit Gain, AP.44 PID Unit Scale</td><td>Adjusts the size to fit the unit selected at AP.41 PID Unit Sel.</td></tr>
<tr><td>AP.45 PID P2-Gain</td><td>The PID controller’s gain can be adjusted using the multi-function terminal. When a terminal is selected from In.65-71 and set to 24 (P Gain2), and if the selected terminal is entered, the gain set in AP.22 and AP.23 can be switched to the gain set in AP.45.</td></tr>
</table>

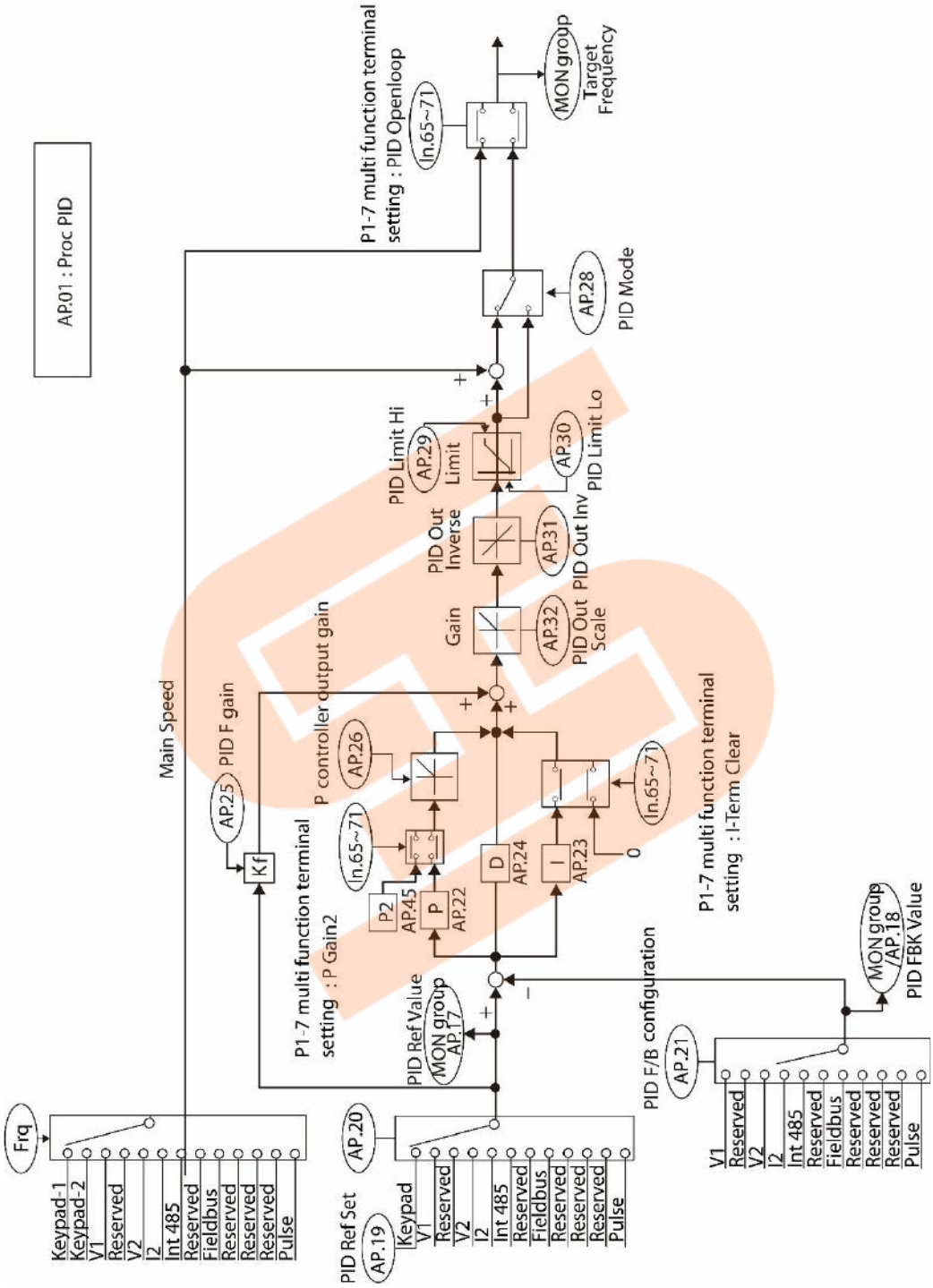

[PID control block diagram]

5.8.2 Pre-PID Operation

When an operation command is entered that does not include PID control, general acceleration occurs until the set frequency is reached. When the controlled variables increase to a particular point, the PID operation begins.

Pre-PID Operation Setting Details

Code	Description
AP.34 Pre-PID Freq	When general acceleration is required, the frequency up to general acceleration is entered. If Pre-PID Freq is set to 30Hz, the general operation continues until the control variable (PID feedback variable) set at AP. 35 is exceeded.
AP.35 Pre-PID Exit, AP.36 Pre-PID Delay	When the feedback variable of the PID controller is higher than the value set at AP. 35, the PID control operation begins. However, when a value is set for AP.36 (Pre-PID Delay) and a feedback variable less than the value set at AP.35 is maintained for a set amount of time, the “pre-PID Fail” fault trip will occur and the output will be blocked.

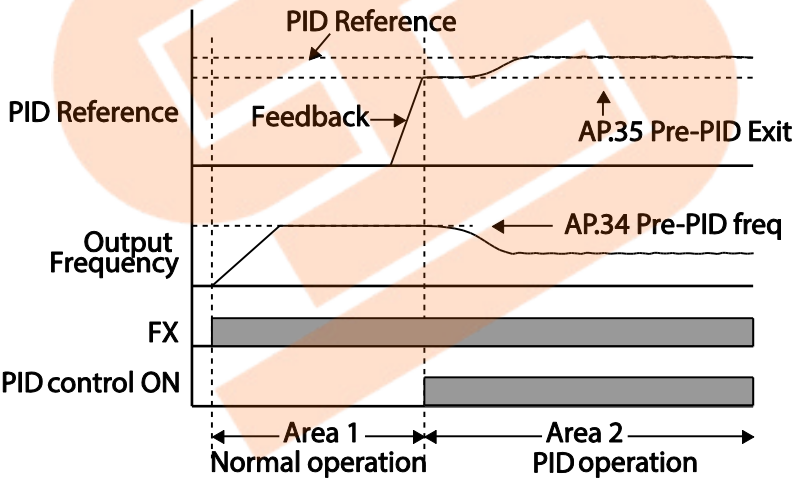

5.8.3 PID Operation Sleep Mode

If the operation continues at a frequency lower than the set condition for PID operation, the PID operation sleep mode starts. When PID operation sleep mode starts, the operation will stop until the feedback exceeds the parameter value set at AP.39 (PID WakeUp Lev). When the PID operation enters sleep mode, a warning will occur. (LCD Loader: PID Sleep, 7Segment KPD: SLP)

PID Operation Sleep Mode Setting Details

Code	Description
AP.37 PID Sleep DT, AP.38 PID Sleep Freq	If an operation frequency lower than the value set at AP.38 is maintained for the time set at AP.37, the operation stops and the PID operation sleep mode starts.
AP.39 PID WakeUp Lev, AP.40 PID WakeUp Mod	Starts the PID operation when in PID operation sleep mode. If AP. 40 is set to 0 (Below Level), the PID operation starts when the feedback variable is less than the value set as the AP. 39 parameter setting. If AP. 40 is set to 1 (Above Level), the operation starts when the feedback variable is higher than the value set at AP. 39. If AP. 40 is set to 2 (Beyond Level), the operation starts when the difference between the reference value and the feedback variable is greater than the value set at AP. 39.

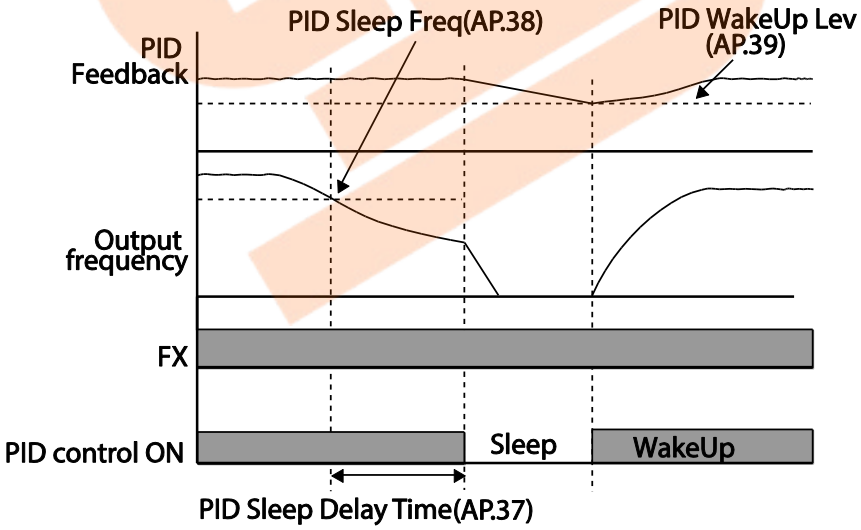

5.8.4 PID Switching (PID Openloop)

When one of the multi-function terminals (In. 65-71) is set to 23 (PID Openloop) and is turned on, the PID operation stops and is switched to general operation. When the terminal turns off, the PID operation starts again.

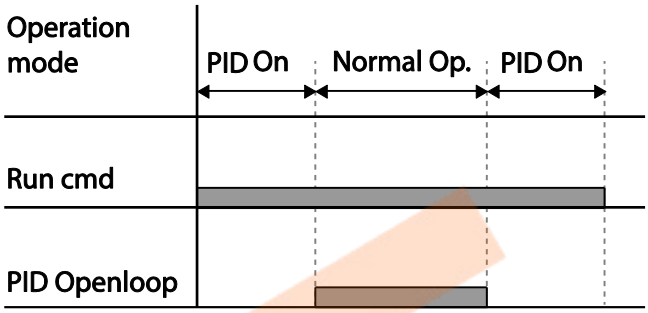

5.9 Auto Tuning

The motor parameters can be measured automatically and can be used for auto torque boost or sensorless vector control.

Example - Auto Tuning Based on 0.75kW, 200V Motor

Group	Code	Name	LCD Display	Parameter Setting		Setting Range	Unit
dr	14	Motor capacity	Motor Capacity	1	0.75 kW	0-15	-
bA	11	Motor pole number	Pole Number	4		2-48	-
	12	Rated slip speed	Rated Slip	40		0-3000	rpm
	13	Rated motor current	Rated Curr	3.6		1.0-1000.0	A
	14	Motor no-load current	Noload curr	1.6		0.5-1000.0	A
	15	Motor rated voltage	Rated Volt	220		170-480	V
	16	Motor efficiency	Efficiency	72		64-100	%
	20	Auto tuning	Auto Tuning	0	None	-	-
	21	Stator resistance	Rs	26.00		Depends on the motor setting	Ω
	22	Leakage inductance	Lsigma	179.4		Depends on the motor setting	mH
	23	Stator inductance	Ls	1544		Depends on the motor setting	mH
	24	Rotor time	Tr	145		25-5000	ms

Group	Code	Name	LCD Display	Parameter Setting	Setting Range	Unit
		constant				

Default Motor Parameter Settings

Motor Capacity (kW)		Rated Current (A)	No-load Current (A)	Rated Slip Frequency(Hz)	Stator Resistance(Ω)	Leakage Inductance (mH)
200V	0.2	1.1	0.8	3.33	14.0	40.4
	0.4	2.4	1.4	3.33	6.70	26.9
	0.75	3.4	1.7	3.00	2.600	17.94
	1.5	6.4	2.6	2.67	1.170	9.29
	2.2	8.6	3.3	2.33	0.840	6.63
	3.7	13.8	5.0	2.33	0.500	4.48
	5.5	21.0	7.1	1.50	0.314	3.19
	7.5	28.2	9.3	1.33	0.169	2.844
	11	40.0	12.4	1.00	0.120	1.488
	15	53.6	15.5	1.00	0.084	1.118
	18.5	65.6	19.0	1.00	0.068	0.819
	22	76.8	21.5	1.00	0.056	0.948
400V	0.2	0.7	0.5	3.33	28.00	121.2
	0.4	1.4	0.8	3.33	14.0	80.8
	0.75	2.0	1.0	3.00	7.81	53.9
	1.5	3.7	1.5	2.67	3.52	27.9
	2.2	5.0	1.9	2.33	2.520	19.95
	3.7	8.0	2.9	2.33	1.500	13.45
	5.5	12.1	4.1	1.50	0.940	9.62
	7.5	16.3	5.4	1.33	0.520	8.53
	11	23.2	7.2	1.00	0.360	4.48
	15	31.0	9.0	1.00	0.250	3.38
	18.5	38.0	11.0	1.00	0.168	2.457
	22	44.5	12.5	1.00	0.168	2.844

* In DRV-09 PM Sensorless (Sensorless Vector Control) mode, no-load current, rated slip frequency, and Leakage inductance, etc. are not to be used.

Auto Tuning Parameter Setting Details

<table>
<tr><th>Code</th><th>Description</th></tr>
<tr><td>bA.20 Auto Tuning</td><td>Select an auto tuning type and run it. Select one of the options and then press the [ENT] key to run the auto tuning.
<table>
<tr><th colspan="2">Setting</th><th>Function</th></tr>
<tr><td>0</td><td>None</td><td>Auto tuning function is not enabled. Also, if you select one of the auto tuning options and run it, the parameter value will revert back to “0” when the auto tuning is complete.</td></tr>
<tr><td>1</td><td>All (rotating type)</td><td>Measures all motor parameters, including stator resistance (Rs), stator inductance (Lsigma), no-load current (Noload Curr), rotor time constant (Tr), etc., while the motor is rotating. As the motor is rotating while the parameters are being measured, if the load is connected to the motor spindle, the parameters may not be measured accurately. For accurate measurements, remove the load attached to the motor spindle.
However, note that the rotor time constant (Tr) must be measured in a stopped position.</td></tr>
<tr><td>2</td><td>All (static type)</td><td>Measures all parameters while the motor is in the stopped position. Measures stator resistance (Rs), stator inductance (Lsigma), no-load current (Noload Curr), rotor time constant (Tr), etc., while the motor is in the stopped position. As the motor is not rotating while the parameters are measured, the measurements are not affected when the load is connected to the motor spindle. However, when measuring parameters, do not rotate the motor spindle on the load side.</td></tr>
<tr><td>3</td><td>Rs+Lsigma (rotating type)</td><td>Measures parameters while the motor is rotating. The measured motor parameters are used for auto torque boost or sensorless vector control.</td></tr>
<tr><td>6</td><td>Tr (static type)</td><td>Measures the rotor time constant (Tr) with the motor in the stopped position and Control Mode (dr.09) is set to IM Sensorless.</td></tr>
<tr><td>7</td><td>All (PM)</td><td>When dr.09 (Control Mode) is set to 6 (PM Sensorless), the motor parameters are measured in the stopped position. Check the motor’s rating plate for motor specifications, such as the base frequency (dr.18), rated voltage (bA.15), pole number (bA.11). Then, perform auto tuning by setting bA.20 to 7 [All (PM)]. The auto tuning operation will configure the bA.21 (Rs), bA.28 [Ld (PM)], bA.29 [Lq (PM)], and bA.30 (PM Flux Ref) parameters.</td></tr>
</table></td></tr>
<tr><td>bA.14 Noload</td><td>Displays motor parameters measured by auto tuning. For parameters that</td></tr>
</table>

Code	Description
Curr, bA.21 Rs–bA.24 Tr	are not included in the auto tuning measurement list, the default setting will be displayed.

Caution

- Perform auto tuning ONLY after the motor has completely stopped running.
- Before you run auto tuning, check the motor pole number, rated slip, rated current, rated volage and efficiency on the motor's rating plate and enter the data. The default parameter setting is used for values that are not entered.
- When measuring all parameters after selecting 2 (All - static type) at bA20: compared with rotation type auto tuning where parameters are measured while the motor is rotating, parameter values measured with static auto tuning may be less accurate. Inaccuracy of the measured parameters may degrade the performance of sensorless operation. Therefore, run static type auto tuning by selecting 2 (All) only when the motor cannot be rotated (when gearing and belts cannot be separated easily, or when the motor cannot be separated mechanically from the load).
- In PM synchronous motor sensorless control mode, check the motor's rating plate and enter the motor specifications, such as the base frequency, pole number, rated current and voltage, and efficiency, before performing auto tuning and detecting other motor parameters by setting bA.20 (Auto Tuning) to 7 [All (PM)]. The detected parameter values may not be accurate if the motor's base specifications are not entered.

5.10 Sensorless Vector Control for Induction Motors

Sensorless vector control is an operation to carry out vector control without the rotation speed feedback from the motor but with an estimation of the motor rotation speed calculated by the inverter. Compared to V/F control, sensorless vector control can generate greater torque at a lower level of current.

Group	Code	Name	LCD Display	Parameter Setting	Setting Range	Unit
dr	09	Control mode	Control Mode	4 IM Sensorless	-	-
	14	Motor capacity	Motor Capacity	Depends on the motor capacity	0-15	-
	18	Base frequency	Base Freq	60	30-400	Hz
bA	11	Motor pole number	Pole Number	4	2-48	-
	12	Rated slip speed	Rated Slip	Depends on the motor capacity	0-3000	Hz
	13	Rated motor current	Rated Curr	Depends on the motor capacity	1-1000	A
	14	Motor no-load current	Noload curr	Depends on the motor capacity	0.5-1000	A
	15	Rated motor voltage	Rated Volt	220/380/440/480	170-480	V
	16	Motor efficiency	Efficiency	Depends on the motor capacity	64-100	%
	20	Auto tuning	Auto Tuning	1 All	-	-
Cn	09	Pre-Excite time	PreExTime	1.0	0.0-60.0	s
	10	Pre-Excite amount	Flux Force	100.0	100.0-300.0	%
	20	Sensorless second gain display setting	SL2 G View Sel	1 Yes	0-1	-
	21	Sensorless speed controller proportional gain1	ASR-SL P Gain1	Depends on the motor capacity	0-5000	%
	22	Sensorless speed controller integral gain 1	ASR-SL I Gain1	Depends on the motor capacity	10-9999	ms
	23*	Sensorless speed controller proportional gain 2	ASR-SL P Gain2	Depends on the motor capacity	1-1000	%
	24*	Sensorless speed controller integral gain 2	ASR-SL I Gain2	Depends on the motor capacity	1-1000	%
	26*	Flux estimator proportional gain	Flux P Gain	Depends on the motor capacity	10-200	%
	27*	Flux estimator integral gain	Flux I Gain	Depends on the motor capacity	10-200	%
	28*	Speed estimator proportional gain	S-Est P Gain1	Depends on the motor capacity	0-32767	-
	29*	Speed estimator integral gain1	S-Est I Gain1	Depends on the motor capacity	100-1000	-
	30*	Speed estimator	S-Est I Gain2	Depends on the	100-10000	-

Group	Code	Name	LCD Display	Parameter Setting	Setting Range	Unit
		integral gain2		motor capacity		
	31*	Sensorless current controller proportional gain	ACR SL P Gain	75	10-1000	-
	32*	Sensorless current controller integral gain	ACR SL I Gain	120	10-1000	-
	52	Torque controller output filter	Torque Out LPF	0	0-2000	ms
	53	Torque limit setting	Torque Lmt Src	0 Keypad-1	0-12	-
	54	Forward direction retrograde torque limit	FWD +Trq Lmt	180.0	0.0-200.0	%
	55	Forward direction regenerative torque limit	FWD -Trq Lmt	180.0	0.0-200.0	%
	56	Reverse direction regenerative torque limit	REV +Trq Lmt	180.0	0.0-200.0	%
	57	Reverse direction retrograde torque limit	REV -Trq Lmt	180.0	0.0-200.0	%
	85*	Flux estimator proportional gain 1	Flux P Gain1	370	100-700	-
	86*	Flux estimator proportional gain 2	Flux P Gain2	0	0-100	-
	87*	Flux estimator proportional gain 3	Flux P Gain3	100	0-500	-
	88*	Flux estimator integral gain 1	Flux I Gain1	50	0-200	-
	89*	Flux estimator integral gain2	Flux I Gain2	50	0-200	-
	90*	Flux estimator integral gain 3	Flux I Gain3	50	0-200	-
	91*	Sensorless voltage compensation 1	SL Volt Comp1	30	0-60	-
	92*	Sensorless voltage compensation 2	SL Volt Comp2	20	0-60	-
	93*	Sensorless voltage compensation 3	SL Volt Comp3	20	0-60	-
	94*	Sensorless field weakening start frequency	SL FW Freq	95.0	80.0-110.0	%
	95*	Sensorless gain switching frequency	SL Fc Freq	2.00	0.00-8.00	Hz

*Cn.23-32 and Cn.85-95 can be displayed only when Cn.20 is set to 1 (Yes).

Caution

For high-performance operation, the parameters of the motor connected to the inverter output must be measured. Use auto tuning (bA.20 Auto Tuning) to measure the parameters before you run sensorless vector operation. To run high-performance sensorless vector control, the inverter and the motor must have the same capacity. If the motor capacity is smaller than the inverter capacity by more than two levels, control may be inaccurate. In that case, change the control mode to V/F control. When operating with sensorless vector control, do not connect multiple motors to the inverter output.

5.10.1 Sensorless Vector Control Operation Setting for Induction Motors

To run sensorless vector control operation, set dr.09 (Control Mode) to 4 (IM sensorless), select the capacity of the motor you will use at dr.14 (Motor Capacity), and select the appropriate codes to enter the rating plate information of the motor.

Code	Input (Motor Rating Plate Information)
drv.18 Base Freq	Base frequency
bA.11 Pole Number	Motor pole number
bA.12 Rated Slip	Rated slip
bA.13 Rated Curr	Rated current
bA.15 Rated Volt	Rated voltage
bA.16 Efficiency	Efficiency (when no information is on the rating plate, default values are used.)

After setting each code, set bA.20 (Auto tuning) to 1 (All - rotation type) or 2 (All - static type) and run auto tuning. Because rotation type auto tuning is more accurate than static type auto tuning, select 1 (All - rotation type) and run auto tuning if you can rotate the motor.

Note

Excitation Current
A motor can be operated only after magnetic flux is generated by current flowing through a coil. The power supply used to generate the magnetic flux is called the excitation current. The stator coil that is used with the inverter does not have a permanent magnetic flux, so the magnetic flux must be generated by supplying an excitation current to the coil before operating the motor.

Sensorless Vector Control Operation Setting Details for Induction Motors

<table>
<tr><th>Code</th><th>Description</th></tr>
<tr><td>Cn.20 SL2 G View Sel</td><td>
<table>
<tr><th colspan="2">Setting</th><th>Function</th></tr>
<tr><td>0</td><td>No</td><td>Does not display sensorless (II) vector control gain code.</td></tr>
<tr><td>1</td><td>Yes</td><td>Allows the user to set various gains applied when the motor rotates faster than medium speed (approx. 1/2 of the base frequency) through sensorless (II) vector control.</td></tr>
</table>

Codes available when setting to 1 (Yes): Cn.23 ASR-SL P Gain2/Cn.24 ASR-SL I Gain2/Cn.26 Flux P Gain/Cn.27 Flux I Gain Gain3/Cn.28 S-Est P Gain1/Cn.29 S-Est I Gain1/Cn.30 S-Est I Gain1/Cn.31 ACR SL P Gain/Cn.32 ACR SL I Gain</td></tr>
<tr><td>Cn.09 PreExTime</td><td>Sets pre-excitation time. Pre-excitation is used to start the operation after performing excitation up to the motor’s rated flux.</td></tr>
<tr><td>Cn.10 Flux Force</td><td>Allows for the reduction of the pre-excitation time. The motor flux increases up to the rated flux with the time constant as shown in the following figure. To reduce the time taken to reach the rated flux, a higher motor flux base value than the rated flux must be provided. When the magnetic flux reaches the rated flux, the provided motor flux base value is reduced.
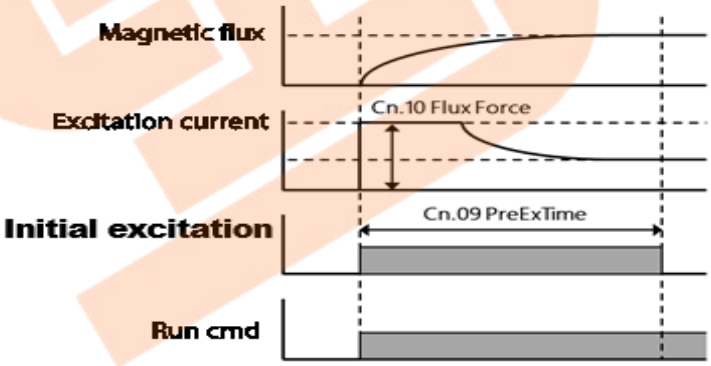
</td></tr>
<tr><td>Cn.11 Hold Time</td><td>Sets the zero-speed control time (hold time) in the stopped position. The output is blocked after zero-speed operation for a set period when the motor decelerates and is stopped by a stop command.</td></tr>
</table>

Code	Description
	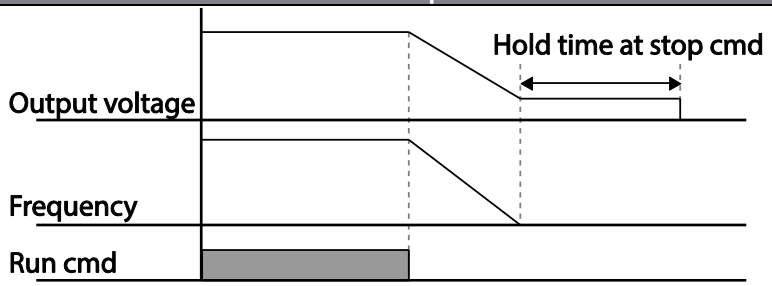
Cn.21 ASR-SL P Gain1, Cn.22 ASR-SL I Gain1	Changes the speed PI controller gain during sensorless vector control. For a PI speed controller, P gain is a proportional gain for the speed deviation. If speed deviation becomes higher than the torque the output command increases accordingly. As the value increases, the faster the speed deviation decreases. The speed controller I gain is the integral gain for speed deviation. It is the time taken for the gain to reach the rated torque output command while a constant speed deviation continues. The lower the value becomes, the faster the speed deviation decreases.
Cn.23 ASR-SL P Gain2, Cn.24 ASR-SL I Gain2	Appears only when 1 (Yes) is selected for Cn.20 (SL2 G view Sel). The speed controller gain can be increased to more than the medium speed for sensorless vector control. Cn.23 ASR-SL P Gain2 is set as a percentage of the low speed gain Cn.21 ASR-SL P Gain1 - if P Gain 2 is less than 100.0%, the responsiveness decreases. For example, if Cn.21 ASR-SL P Gain1 is 50.0% and Cn.23 ASR-SL P Gain2 is 50.0%, the actual middle speed or faster speed controller P gain is 25.0%. Cn.24 ASR-SL I Gain2 is also set as a percentage of the Cn.22 ASR-SL I Gain1. For I gain, the smaller the I gain 2 becomes, the slower the response time becomes. For example, if Cn.22 ASR-SL I Gain1 is 100ms and Cn.24 ASR-SL I Gain2 is 50.0%, the middle speed or faster speed controller I gain is 200 ms. The controller gain is set according to the default motor parameters and Acc/Dec time.
Cn.26 Flux P Gain, Cn.27 Flux I Gain, Cn.85-87 Flux P Gain13, Cn.88-90 Flux I Gain1-3	Sensorless vector control requires the rotor flux estimator. For the adjustment of flux estimator gain, refer to *5.10.2 Sensorless Vector Control Operation Guide for Induction Motors* on page *195*.
Cn.28 S-Est P Gain1, Cn.29 S-Est I Gain1, Cn.30 S-Est I Gain2	Speed estimator gain for sensorless vector control can be adjusted. To adjust speed estimator gain, refer to *5.10.2 Sensorless Vector Control Operation Guide for Induction Motors* on page *195*.
Cn.31 ACR SL P Gain, Cn.32 ACR SL I Gain	Adjusts the P and I gains of the sensorless current controller. For the adjustment of sensorless current controller gain, refer to *5.10.2 Sensorless Vector Control Operation Guide for Induction Motors* on page *195*.
Cn.53 Torque Lmt Src	Select a type of torque limit setting, using the keypad, terminal block analog input (V1 and I2) or communication power. When setting torque

<table>
<tr><th>Code</th><th>Description</th></tr>
<tr><td></td><td>limit, adjust the torque size by limiting the speed controller output. Set the retrograde and regenerative limits for forward and reverse operation.
<table>
<tr><th colspan="2">Setting</th><th>Function</th></tr>
<tr><td>0</td><td>KeyPad-1</td><td rowspan="2">Sets the torque limit with the keypad.</td></tr>
<tr><td>1</td><td>KeyPad-2</td></tr>
<tr><td>2</td><td>V1</td><td rowspan="3">Sets the torque limit with the analog input terminal of the terminal block.</td></tr>
<tr><td>4</td><td>V2</td></tr>
<tr><td>5</td><td>I2</td></tr>
<tr><td>6</td><td>Int 485</td><td>Sets the torque limit with the communication terminal of the terminal block.</td></tr>
<tr><td>8</td><td>FieldBus</td><td>Sets the torque limit with the FieldBus communication option.</td></tr>
<tr><td>9</td><td>UserSeqLink</td><td>This enters the torque reference by linking the common area with the user sequence output.</td></tr>
<tr><td>12</td><td>Pulse</td><td>Sets the torque limit with the pulse input of the terminal block.</td></tr>
</table>
The torque limit can be set up to 200% of the rated motor torque.</td></tr>
<tr><td>Cn.54 FWD +Trq Lmt</td><td>Sets the torque limit for forward retrograde (motoring) operation.</td></tr>
<tr><td>Cn.55 FWD –Trq Lmt</td><td>Sets the torque limit for forward regenerative operation.</td></tr>
<tr><td>Cn.56 REV +Trq Lmt</td><td>Sets the torque limit for reverse regenerative operation.</td></tr>
<tr><td>Cn.57 REV –Trq Lmt</td><td>Sets the torque limit for reverse retrograde (motoring) operation.</td></tr>
<tr><td>In.02 Torque at 100%</td><td>Sets the maximum torque. For example, if In.02 is set to 200% and an input voltage (V1) is used, the torque limit is 200% when 10V is entered. However, when the VI terminal is set up with the factory default setting and the torque limit setup uses a method other than the keypad, check the parameter settings in the monitor mode. In the Config Mode CNF.21-23 (only displayed when using LCD keypad), select 21(Torque limit).</td></tr>
<tr><td>Cn.91-93
SL Volt Comp1-3</td><td>Adjust output voltage compensation values for sensorless vector control. For output voltage compensation, refer to 5.10.2 Sensorless Vector Control Operation Guide for Induction Motors on page 195.</td></tr>
<tr><td>Cn.52 Torque Out LPF</td><td>Sets the time constant for torque command by setting the torque controller output filter.</td></tr>
</table>

Caution

Adjust the controller gain according to the load's characteristics. However, the motor can overheat or the system may become unstable depending on the controller gain settings.

Note

Speed controller gain can improve the speed control waveform while monitoring the changes in

speed. If speed deviation does not decrease quickly, increase the speed controller P gain or decrease I gain (time in ms). However, if the P gain is increased too high or I gain is decreased too low, severe vibration may occur. If oscillation occurs in the speed waveform, try to increase I gain (ms) or reduce P gain to adjust the waveform.

5.10.2 Sensorless Vector Control Operation Guide for Induction Motors

Problem	Relevant function code	Troubleshooting
The amount of starting torque is insufficient.	bA.24 Tr Cn.09 PreExTime Cn.10 Flux Force Cn.31 ACR SL P Gain Cn.54–57 Trq Lmt Cn.93 SL Volt Comp3	Set the value of Cn. 90 to be more than 3 times the value of bA.24 or increase the value of Cn.10 by increments of 50%. If the value of Cn.10 is high, an overcurrent trip at start can occur. In this case, reduce the value of Cn.31 by decrements of 10.
		Increase the value of Trg Lmt (Cn.54-57) by increments of 10%.
		Increase the value of Cn.93 by increments of 5.
The output frequency is higher than the base frequency during no-load operation at low speed (10Hz or lower).	Cn.91 SL Volt Comp1	Decrease the value of Cn.91 by decrements of 5.
The motor hunts or the amount of torque is not sufficient while the load is increasing at low speed (10Hz or lower).	Cn.04 Carrier Freq Cn.21 ASR-SL P Gain1 Cn.22 ASR-SL I Gain1 Cn.93 SL Volt Comp3	If the motor hunts at low speed, increase the value of Cn.22 by increments of 50m/s, and if hunting does not occur, increase the value of Cn.21 to find the optimal operating condition.
		If the amount of torque is insufficient, increase the value of Cn.93 by increments of 5.
		If the motor hunts or the amount of torque is insufficient in the 5-10Hz range, decrease the value of Cn.04 by increments of 1kHz (if Cn.04 is set to exceed 3kHz).
The motor hunts or overcurrent trip occurs in regenerative load at low speed (10 Hz or lower).	Cn.92 SL Volt Comp2 Cn.93 SL Volt Comp3	Increase the value of Cn.92-93 by increments of 5 at the same time.
Over voltage trip occurs due to sudden acceleration/deceleration or sudden load fluctuation (with no brake	Cn.24 ASR-SL I Gain2	Decrease the value of Cn.2 by decrements of 5%.

Problem	Relevant function code	Troubleshooting
resistor installed) at mid speed (30Hz or higher).		
Over current trip occurs due to sudden load fluctuation at high speed (50 Hz or higher).	Cn.54–57 Trq Lmt Cn.94 SL FW Freq	Decrease the value of Cn.54-57 by decrements of 10% (if the parameter setting is 150% or higher).
		Increase/decrease the value of Cn.94 by increments/decrements of 5% (set below 100%).
The motor hunts when the load increases from the base frequency or higher.	Cn.22 ASR-SL I Gain1 Cn.23 ASR-SL I Gain2	Increase the value of Cn.22 by increments of 50m/s or decrease the value of Cn.24 by decrements of 5%.
The motor hunts as the load increases.	Cn.28 S-Est P Gain1 Cn.29 S-Est I Gain1	At low speed (10Hz or lower), increase the value of Cn.29 by increments of 5.
		At mid speed (30 Hz or higher), increase the value of Cn.28 by increments of 500. If the parameter setting is too extreme, over current trip may occur at low speed.
The motor speed level decreases.	bA.20 Auto Tuning	Select 6. Tr (static type) from bA. 24 and run bA.24 Rotor time constant tuning.

*Hunting: Symptom of irregular vibration of the equipment.

5.11 Sensorless Vector Control for PM (Permanent-Magnet) Synchronous Motors

Sensorless vector control is an operation that carries out vector control without rotation speed feedback from the motor but, instead, with an estimation of the motor rotation speed calculated by the inverter.

Group	Code	Name	LCD Display	Parameter Setting	Setting Range	Unit
dr	09	Control mode	Control Mode	6 | PM Sensorless	-	-
	14	Motor capacity	Motor Capacity	Depends on the motor capacity	0–15	-
	18	Base frequency	Base Freq	Depends on the PM motor capacity	30–180	Hz
	20	Maximum frequency	Max Freq	Depends on the PM motor capacity	40–180	Hz
bA	11	Motor pole number	Pole Number	4	2–48	-
	13	Rated motor current	Rated Curr	Depends on the motor capacity	1–1000	A
	15	Motor-rated voltage	Rated Volt	220/380/440/480	170–480	V
	16	Motor efficiency	Efficiency	Depends on the motor capacity	64–100	%

Group	Code	Name	LCD Display	Parameter Setting	Setting Range	Unit
	19	Motor input voltage	AC Input Volt	220/380	170–480	
	20	Auto tuning	Auto Tuning	7	All (PM)	-
	32	Q-axis inductance scale	Lq (PM) Scale	100%	50–150	%
	34	Auto tuning level for Ld and Lq	Ld,Lq Tune Lev	33.3%	20.0–50.0	%
	35	Auto tuning frequency for Ld and Lq	Ld,Lq Tune Hz	100.0%	80.0–150.0	%
Cn	12	PM speed controller P gain 1	ASR P Gain 1	100	0–5000	-
	13	PM speed controller I gain 1	ASR I Gain 1	150	0–5000	-
	15	PM speed controller P gain 2	ASR P Gain 2	100	0–5000	-
	16	PM speed controller I gain 2	ASR I Gain 2	150	0–9999	-
	33	PM D-axis back-EMF estimated gain (%)	PM EdGain Perc	100.0	0–300.0	%
	34	PM Q-axis back-EMF estimated gain (%)	PM EqGain Perc	100.0	0–300.0	%
	35	Initial pole position estimation retry	PD Repeat Num	2	0–10	-
	36	Initial pole position estimation interval	Pulse Interval	20	1–100	ms
	37	Initial pole position estimation pulse current (%)	Pulse Curr %	15	10–100	%
	38	Initial pole position estimation pulse voltage (%)	Pulse Volt %	500	100–4000	-
	39	PM dead-time range (%)	PMdeadBand Per	100.0	50.0–200.0	%
	40	PM dead-time voltage (%)	PMdeadVolt Per	100.0	50.0–200.0	%
	41	PM speed estimator proportional gain	PM SpdEst Kp	100	0–32000	-
	42	PM speed estimator integral gain	PM SpdEst Ki	10	0–32000	-
	43	PM speed estimator proportional gain 2	PM SpdEst Kp 2	300	0–32000	-
	44	PM speed estimator integral	PM SpdEst Ki 2	30	0–32000	-

Group	Code	Name	LCD Display	Parameter Setting	Setting Range	Unit
		gain 2				
	45	Speed estimator feedforward high speed range (%)	PM Flux FF %	300	0–1000	%
	46	Initial pole position estimation type	Init Angle Sel	1: Angle Detect	0–2	0–2
	48	Current controller P gain	ACR P Gain	1200	0–10000	-
	49	Current controller I gain	ACR I Gain	120	0–10000	-
	50	Voltage controller limit	V Con HR	10.0%	0–1000	%
	51	Voltage controller I gain	V Con Ki	10.0%	0–20000	%
	52	Torque controller output filter	Torque Out LPF	0	0–2000	msec
	53	Torque limit source	Torque Lmt Src	0	Keypad-1	0–12
	54	FWD reverse torque limit	FWD +Trq Lmt	180.0	0.0–200.0	%
	55	FWD regenerative torque limit	FWD -Trq Lmt	180.0	0.0–200.0	%
	56	REV regenerative torque limit	REV +Trq Lmt	180.0	0.0–200.0	%
	57	REV reverse torque limit	REV -Trq Lmt	180.0	0.0–200.0	%

Caution

For high-performance operation, the parameter values of the motor connected to the inverter output must be estimated. Configure the motor-related Basic function group parameters by entering the motor specification values on the rating plate. Then, perform auto tuning by setting bA. 20 (Auto Tuning) to 7 [All (PM)] to automatically measure other parameters before operating a PM synchronous motor in sensorless vector control mode. For high-performance PM sensorless vector control, the inverter and the motor must have the same capacity. The inverter control may be inaccurate if the motor capacity and the inverter capacity do not match. In sensorless vector control mode, do not connect multiple motors to the inverter output.

5.11.1 Detecting the Initial Pole Position

Initial pole position detection is a process to match the rotor position calculated by the inverter and the actual rotor position in a motor. In a permanent-magnet (PM) synchronous motor, rotor flux is generated from the permanent magnet attached to the rotor. Therefore, to run the motor in vector control mode, the exact rotor position (flux position) must be

detected for accurate control of the torque generated by the motor.

At Cn. 46 (InitAngle Sel), select the type of initial pole position detection.

When Cn. 46 is set to 0 (None), the motor is operated according to the pole position estimated by the inverter's sensorless control algorithm, instead of actually detecting the physical position of the rotor pole.

When Cn. 46 is set to 1 (Angle Detect), the motor is operated according to the pole position detected by changes in the current. The voltage pulse input is used to detect the pole position and results in a small amount of noise at motor startup.

When Cn. 46 is set to 2 (Alignment), the inverter forcefully align the rotor position by supplying DC current for a certain period of time.

Group	Code	Name	LCD display	Setting		Setting range	Unit
Cn	35	Pole position detection retry count	PD Repeat Num	1		0–10	-
	36	Pole position detection interval	Pulse Interval	20		1–100	Ms
	37	Pole position detection pulse current (%)	Pulse Curr %	15		10–100	%
	38	Pole position detection pulse voltage (%)	Pulse Volt %	500		100–4000	-
	46	Pole position detection type	Init Angle Sel	0	None	0–2	-
				1	Angle Detect		
				2	Alignment		

5.11.2 Sensorless Vector Control Mode Settings for PM Synchronous Motors

To operate a PM synchronous motor in sensorless vector control mode, set dr.09 (Control Mode) to 6 (PM Sensorless), select the motor capacity at dr.14 (Motor Capacity), and enter the appropriate codes in the Basic (bA) group with the motor specification values found on the motor's rating plate. If a specific motor capacity does not exist in the setting options, select a higher motor capacity that is closest to the actual motor capacity.

Code	Input Values (Motor's Rating Plate Information)
dr.18 Base Freq	Base frequency
dr.20 Max Freq	Maximum frequency
bA.11 Pole Number	Motor pole number
bA.13 Rated Curr	Rated current
bA.15 Rated Volt	Rate voltage

Code	Input Values (Motor's Rating Plate Information)
bA.16 Efficiency	Efficiency
bA.19 AC Input Volt	Input power voltage

After entering the codes, set bA.20 (Auto tuning) to 7 [All(PM)] and perform a static auto tuning operation. When auto tuning is complete, the bA.21 (Rs), bA.28 Ld (PM), bA. 29 Lq (PM), and bA. 30 (PM Flux Ref) parameters are automatically measured and saved.

Sensorless Vector Control Operation Setting Details

Code	Description
Cn.4 Carrier Freq	Sets the PWM interrupter cycle and sampling frequency cycle for a PM synchronous motor operation in sensorless vector control mode. The default carrier frequency is set at 5 kHz, and the setting range is 2–10 kHz.
Cn.11 Hold Time	Sets the zero-speed control time (hold time) in the stopped position. The output is blocked after zero-speed operation for a set period when the motor decelerates and is stopped by a stop command. 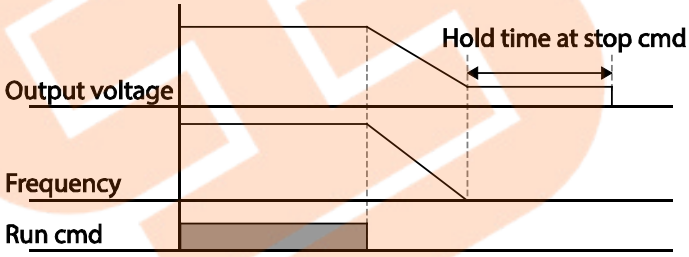
Cn.12 ASR P Gain1, Cn.13 ASR I Gain1 Cn.15 ASR P Gain2 Cn.16 ASR I Gain2	Changes the speed PI controller gain during a PM synchronous motor operation in sensorless vector control mode. For a PI speed controller, P gain is a proportional gain for the speed deviation. If the speed deviation becomes greater than the torque, the output command will increase accordingly. The higher the value becomes, the faster the speed deviation will decrease. The speed controller I gain is the integral gain for speed deviation. It is the time taken for the gain to reach the rated torque output command while constant speed deviation continues. The lower the value becomes, the faster the speed deviation will decrease. As the motor inertia varies by motor, the gain values should be changed according to the motor speeds. Cn.12 and Cn. 13 set the low speed P/I controller gain values, while Cn.15 and Cn.16 set the high speed P/I controller gain values, so that an appropriate gain value can be used for different motor speeds.
Cn.33 PM EdGain Perc, Cn.34 PM EqGain Perc	To ensure that the back-EMF with rotor position information can be appropriately estimated during a PM synchronous motor operation in sensorless vector control mode, set these values as a percentage of

<table>
<tr><th>Code</th><th>Description</th></tr>
<tr><td></td><td>the proportional gain, which is designed to have stable estimator polarity.
Higher values result in faster responses, with higher chances of increased motor vibration.
Excessively low values may result in motor startup failure due to slow response rate.</td></tr>
<tr><td>Cn.41 PM SpdEst Kp,
Cn.42 PM SpdEst Ki
Cn.43 PM SpdEst Kp2
Cn.44 PM SpdEst Ki2</td><td>Set these parameters to change the speed estimator gain during a PM synchronous motor operation in sensorless vector control mode.
If fault trips occur or excessive oscillation is observed at low speeds, decrease the value at Cn.41 in 10% decrements until the motor operates stably.
If ripples occur during normal operation, increase the value at Cn. 42.
The values at Cn.43 and Cn.44 are used for low speed operations in 200 V motors.</td></tr>
<tr><td>Cn.39 PMdeadBand Per
Cn.40PMdeadVolt Per</td><td>Sets the output compensation values during a PM synchronous motor operation in sensorless vector control mode.
If the motor fails to operate at low speeds at or below 5% of the rated motor speed, increase the values set at Cn.39 and Cn.40 by 10% increments. Decrease the values in 10% decrements if a clanking noise occurs at motor startup and motor stop.</td></tr>
<tr><td>Cn.45 PM Flux FF %</td><td>Sets the high-speed portion of the feed forward rate against the back-EMF during a PM synchronous motor operation in sensorless vector control mode. Feed forwarding enhances operation of the speed estimator.
Increase the value at Cn.45 in 10% increments to suppress motor oscillation under load. A fault trip may occur if this value is set too high.</td></tr>
<tr><td>Cn.48 ACR P-Gain
Cn.49 ACR I-Gain</td><td>Sets the gain values for the PI current controller in a synchronous motor.
The P gain is the proportional gain for the current deviation. The current deviation decreases faster with higher values, as the deviation in voltage output command increases with increased deviation.
The I gain is the integral gain for the current deviation. Deviation in normal operation decreases with higher values.

However, the gain values are limited by the carrier frequency. A fault trip may occur due to interference if you set the gain values too high.</td></tr>
<tr><td>Cn.53 Torque Lmt Src</td><td>Select a source for torque limit input: Keypad, terminal block analog input (V1 and I2), or input via network communication.
The torque limit value is used to adjust the torque reference size by limiting the speed controller output. The reverse and regenerative torque limits may be set for operations in the forward or reverse direction.
<table>
<tr><th colspan="2">Setting</th><th>Function</th></tr>
<tr><td>0</td><td>KeyPad-1</td><td rowspan="2">Sets the torque limit via the keypad.</td></tr>
<tr><td>1</td><td>KeyPad-2</td></tr>
<tr><td>2</td><td>V1</td><td></td></tr>
</table>
</td></tr>
</table>

<table>
<tr><th>Code</th><th>Description</th></tr>
<tr><td></td><td>
<table>
<tr><td>4</td><td>V2</td><td rowspan="2">Sets the torque limit via the analog input terminals of the terminal block.</td></tr>
<tr><td>5</td><td>I2</td></tr>
<tr><td>6</td><td>Int 485</td><td>Sets the torque limit via the communication terminal of the terminal block.</td></tr>
<tr><td>8</td><td>FieldBus</td><td>Sets the torque limit with the FieldBus communication option.</td></tr>
<tr><td>9</td><td>UserSeqLink</td><td>Sets the torque limit with a user sequence output. The torque reference is received via the common area addresses.</td></tr>
<tr><td>12</td><td>Pulse</td><td>Sets the torque limit with the pulse input of the terminal block.</td></tr>
</table>
The torque limit can be set up to 200% of the rated motor torque.
</td></tr>
<tr><td>Cn.54 FWD +Trq Lmt</td><td>Sets the reverse torque limit for forward operation.</td></tr>
<tr><td>Cn.55 FWD –Trq Lmt</td><td>Sets the regenerative torque limit for forward operation.</td></tr>
<tr><td>Cn.56 REV +Trq Lmt</td><td>Sets the regenerative torque limit for reverse operation.</td></tr>
<tr><td>Cn.57 REV –Trq Lmt</td><td>Sets the reverse torque limit for reverse operation.</td></tr>
<tr><td>In.02 Torque at 100%</td><td>Sets the maximum torque. For example, if In.02 is set to 200% and an input voltage (V1) is used, the torque limit will be 200% when 10 V is entered. However, when the V1 terminal is set to the factory default setting and the torque limit input source is any device other than the keypad, check the parameter settings in Monitor mode. Set CnF.21–23 (only displayed when an LCD keypad is used) to 21 (Torque limit).</td></tr>
<tr><td>Cn.52 Torque Out LPF</td><td>Sets the time constant for torque command by setting the torque controller output filter.</td></tr>
</table>

Caution

Adjust the controller gain according to the load's characteristics. However, the motor can overheat or the system can become unstable depending on the controller gain settings.

Note

Speed controller gain can improve the speed control waveform while monitoring the changes in speed. If the speed deviation does not decrease fast enough, increase the speed controller P gain or decrease I gain (time in ms). However, if the P gain value is increased too much or the I gain value is decreased too much, severe vibrations may occur. If oscillation occurs in the speed waveform, try to increase the I gain (ms) or reduce the P gain to adjust the waveform.

5.11.3 Guidelines for Running a PM Synchronous Motor in Sensorless Vector Control Mode

Problem	Relevant function code	Troubleshooting
Starting torque is insufficient.	Cn.48 ACR P-Gain Cn.39 PMdeadBand Per Cn.40 PMdeadVolt Per	If an overcurrent trip occurs at startup, try decreasing the value at Cn.48 in 10% decrements. Try increasing the value at Cn.39 or Cn.40 in 10% increments.
The motor hunts when starting up.	Cn.40 PMdeadVolt Per	Try decreasing the value at Cn.40 in 10% decrements.
The motor hunts with regenerative load at low speed (10Hz or lower), or an “OCT” fault trip occurs.	Cn.40 PMdeadVolt Per	Try increasing the value at Cn.40 in 10% increments.
The motor hunts* or the torque is not sufficient while the load is increasing at low speed (10Hz or lower).	Cn.04 Carrier Freq Cn.12 ASR P Gain 1 Cn.13 ASR I Gain 1	If the motor hunts at low speeds, try increasing the value at Cn.13 in 50 msec increments. If the motor does not hunt, try increasing the value at Cn.12 in 10% increments until the motor runs in an optimal operation condition.
		If the motor hunts and the torque is not sufficient at 5–10Hz speed range, and if the carrier frequency at Cn.04 is set to more than 3 kHz, try decreasing the value in 1 kHz decrements.
The motor hunts excessively during no-load operation when rated current is supplied to the motor.	Cn.12 ASR P Gain 1 Cn.13 ASR I Gain 1 Cn.15 ASR P Gain 2 Cn.16 ASR I Gain 2	Try decreasing the speed controller gains at Cn. 12–16 in 30% decrements.
The value at bA.30 (PM Flux Ref) becomes “0” after performing an auto tuning operation by setting bA. 20 to 7 [All (PM)].	bA.11 Pole Number bA.15 Rated Volt dr.18 Base Freq	Refer to the motor’s rating plate and set the pole number at bA.11 (Pole Number), or enter a calculated pole number: Pole Number = (120 x BaseFreq/BaseRPM) Refer to the motor’s rating plate and set the rated voltage and base frequency at bA-15 (Rated Volt) and dr.18 (Base Freq), and then run auto tuning again by setting bA-20 (Auto Tuning) to 7 [All (PM)].
Fault trips occur after a static auto tuning.	bA.21 Rs bA.28 Ld (PM) bA.29 Lq (PM) bA.30 PM Flux Ref	Motor operation may fail if a static PM auto tuning result is not accurate. Refer to the motor’s rating plate and set the motor-related parameters again.
“OVT” occurs due to abrupt acceleration, deceleration, or	Cn.16 ASR I Gain 2	Try decreasing the value at Cn.16 in 5% decrements.

Problem	Relevant function code	Troubleshooting
massive load change while the motor is operated at mid-speed (above 30Hz).		
Speed variation occurs during an operation at rated motor speed, or during an overloaded high speed operation.	Cn.45 PM Flux FF % Cn.50 V Con HR Cn.51 V Con Ki	If the motor is operated at the rated speed, try decreasing the value at Cn.50 in 5% increments. If the motor response is slow, try increasing the value at Cn.51 in 5% increments (or, try increasing the value at Cn.45 in 100% increments).
"OC1" fault trip or jerking occurs during a high speed operation.	Cn.41 PM SpdEst Kp Cn.42 PM SpdEst Ki	Try increasing the value at Cn. 41 in increments of 10 and the value at Cn.42 in increments of 1. Note that a fault trip may occur if the values at Cn. 41 and Cn.42 are set too high.
Jerking occurs during a low speed operation.	Cn.13 ASR I Gain 1	Try increasing the value at Cn.13 (low speed range speed controller I gain) to eliminate jerking.
A "clanking" noise is heard at the beginning of startup or during deceleration.	Cn.12 ASR P Gain 1 Cn.13 ASR I Gain 1 Cn.40 PMdeadVolt Per	Try increasing the values at Cn.12 and Cn.13 in 10% increments, or try decreasing the value at Cn.40 in 10% decrements.
The motor cannot reach the speed reference when it is operated at or above the rated speed, or when the acceleration is not responsive.	Cn.50 V Con HR Cn.51 V Con Ki	Try increasing the value at Cn.50 in 1% increments if the motor cannot reach the speed reference. Try increasing the value at Cn.51 in 10% increments if the motor acceleration is not responsive.
"OC1" trip occurs after an abrupt regenerative load (over 100%).	Cn.12 ASR P Gain 1 Cn.13 ASR I Gain 1	Try decreasing the values at Cn.12 and Cn.13 in 10% decrements.
The motor jerks during acceleration.	Cn.42 PM SpdEst Ki	Try increasing the speed estimator proportional gain at Cn.42 in increments of 5.
A massive current rises when the motor is stopped during a 20:1 speed startup.	Cn.13 ASR I Gain 1	Try increasing the value at Cn. 13 in 10% increments.
An oscillation occurs when an abrupt load is applied to the motor during a low speed operation.	Cn.41 PM SpdEst Kp Cn.42 PM SpdEst Ki	Try increasing the values at Cn. 41 and Cn.42 in 10% increments.
During a PM speed search, the speed search stops at around 20% of the base	Cn.69 SS Pulse Curr	Try decreasing the value at Cn.69 in 5% decrements.

Problem	Relevant function code	Troubleshooting
frequency, and the motor is stopped and starts again after a massive current rises.		
During a high-speed operation in PM control mode utilizing the kinetic energy buffering, a massive current rises at around 20% of the base frequency, the motor is stopped, and it fails to start.	Cn.78 KEB Start Lev Cn.79 KEB Stop Lev Cn.80 KEB P Gain Cn.81 KEB I Gain	Try increasing the values at Cn.78 and Cn.79 in 5% increments, or try doubling the gain values at Cn.80 and Cn. 81.
1. When the motor is overloaded, the maximum torque limit current is supplied to the motor at startup, and the motor fails to operate due to an inverter overload fault trip. 2. Speed search fails when the a load exceeding the rated load is applied to the motor at each speed section, or a current equal to or exceeding 150% of the rated current is supplied to the motor.	bA.29 Lq (PM)	This happens when the Lq parameter value is decreasing due to certain causes, such as self-saturation. Try increasing the value (100%) at bA.32 in 5% increments.
A fault trip occurs when the motor tries to start up or accelerate from a free run at certain speed range.	Cn.71 Speed Search	During a PM synchronous motor operation in sensorless vector mode, the motor starts up after the initial pole position detection is made. To accelerate the motor in a free-run state, enable speed search at acceleration by setting bit 0 (0001) at Cn.71 (Speed Search).
During a low speed operation, the output speed search becomes unstable when a massive load exceeding the rated load is abruptly applied to the motor.	Cn.13 ASR I Gain 1 Cn.40 PMdeadVolt Per	The motor control may become unstable due to input voltage deviation during a low-speed operation with low voltage input. Try decreasing the values at Cn.31 and Cn.40 in 10% decrements.

5.12 Kinetic Energy Buffering Operation

When the input power supply is disconnected, the inverter's DC link voltage decreases, and a low voltage trip occurs blocking the output. A kinetic energy buffering operation uses regenerative energy generated by the motor during the blackout to maintain the DC link voltage. This extends the time for a low voltage trip to occur, after an instantaneous power interruption.

Group	Code	Name	LCD Display	Parameter Setting		Setting Range	Unit
Cn	77	Kinetic energy buffering selection	KEB Select	0 1 2	None KEB-1 KEB-2	0~2	-
	78	Kinetic energy buffering start level	KEB Start Lev	130.0		110.0~200.0	%
	79	Kinetic energy buffering stop level	KEB Stop Lev	135.0		Cn-78~210.0	%
	80	Energy buffering P gain	KEB P Gain	1500		0-20000	
	81	Energy buffering I gain	KEB I Gain	500		1~20000	
	82	Energy buffering Slip gain	KEB Slip Gain	30.0		0~2000.0%	
	83	Energy buffering acceleration time	KEB Acc Time	10.0		0.0~600.0(s)	-
In	65 ~71	Pn terminal function setting	Pn Define	52	KEB-1 Select	-	-

Kinetic Energy Buffering Operation Setting Details

<table>
<tr><th>Code</th><th>Description</th></tr>
<tr><td>Cn.77 KEB Select</td><td>
Select the kinetic energy buffering operation when the input power is disconnected. If 1 or 2 is selected, it controls the inverter's output frequency and charges the DC link (inverter's DC part) with energy generated from the motor. Also, this function can be set using a terminal input. From the Pn terminal function settings, select KEB-1 Select, and then turn on the terminal block to run the KEB-1 function. (If KEB-1 Select is selected, KEB-1 or KEB-2 cannot be set in Cn-77.)
<table>
<tr><th colspan="2">Setting</th><th>Function</th></tr>
<tr><td>0</td><td>None</td><td>General deceleration is carried out until a low voltage trip occurs.</td></tr>
<tr><td>1</td><td>KEB-1</td><td>When the input power is blocked, it charges the DC link with regenerated energy. When the input power is restored, it restores normal operation from the energy buffering operation to the frequency reference operation. KEB Acc Time in Cn-89 is applied as the operation frequency acceleration time when restoring to the normal operation.</td></tr>
<tr><td>2</td><td>KEB-2</td><td>When the input power is blocked, it charges the DC link with regenerated energy. When the input power is restored, it changes from the energy buffering operation to the deceleration stop operation. The Dec Time in dr-04 is applied as the operation frequency deceleration time during the deceleration stop operation.</td></tr>
</table>
[KEB-1]
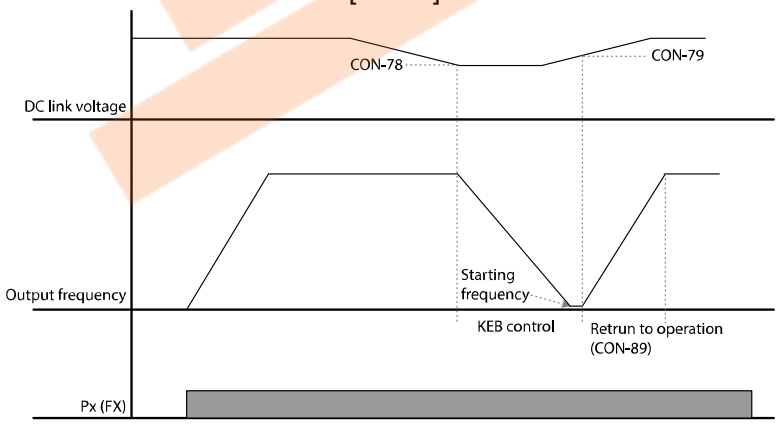

[KEB-2]
</td></tr>
</table>

Code	Description
	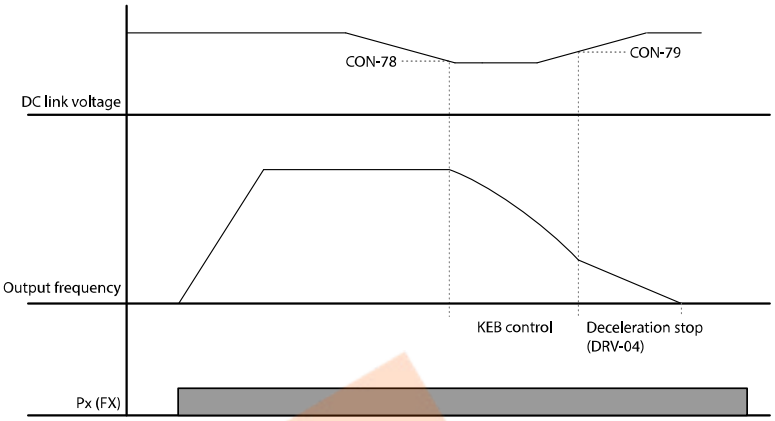
Cn.78 KEB Start Lev, Cn.79 KEB Stop Lev	Sets the start and stop points of the kinetic energy buffering operation. The set values must be based on the low voltage trip level as 100% and the stop level (Cn. 79) must be set higher than the start level (Cn.78).
Cn.80 KEB P Gain	The controller P Gain is for maintaining the voltage of the DC power section during thekinetic energy buffering operation. Change the setting value when a low voltage trip occurs right after a power failure.
Cn.81 KEB I Gain	The controller I Gain is for maintaining the voltage of the DC power section during the kinetic energy buffering operation. Sets the gain value to maintain the frequency during the kinetic energy buffering operation until the inverter stops.
Cn.82 KEB Slip Gain	The slip gain is for preventing a low voltage trip due to load when the kinetic energy buffering operation start from blackout.
Cn.83 KEB Acc Time	Set the acceleration time of operation frequency when it restores normal operation from the kinetic energy buffering operation under the input power is restored.

Caution

Depending on the duration of Instantaneous power interruptions and the amount of load inertia, a low voltage trip may occur even during a kinetic energy buffering operation. Motors may vibrate during kinetic energy buffering operation for some loads except variable torque load (for example, fan or pump loads).

5.13 Torque Control

The torque control function controls the motor to maintain the preset torque value. The motor rotation speed maintains the speed constantly when the output torque and load torque of the motor keep a balance. Therefore, the motor rotation speed is decided by the load when controlling the torque.

When the motor output torque is greater than the load, the speed of motor becomes too fast. To prevent this, set the speed limit. (The torque control function cannot be used while the speed limit function is running.)

Torque control setting option

Group	Code	Name	LCD Display	Parameter Setting		Unit
dr	09	Control mode	Control Mode	4	IM Sensorless	-
	10	Torque control	Torque Control	1	Yes	-

Torque control setting option details

Group	Code	Name	Parameter Setting		Unit
dr	02	Cmd Torque	-	0.0	%
	08	Trq Ref Src	0	Keypad-1	-
	09	Control Mode	4	IM Sensorless	-
	10	Torque Control	1	Yes	-
	22	(+) Trq Gain	-	50-150	%
	23	(-) Trq Gain	-	50-150	%
bA	20	Auto Tuning	1	Yes	-
Cn	62	Speed LmtSrc	0	Keypad-1	-
	63	FWD Speed Lmt	-	60.00	Hz
	64	REV Speed Lmt	-	60.00	Hz
	65	Speed Lmt Gain	-	100	%
OU	31-33	Relay x or Q1	27	Torque Dect	-
	59	TD Level	-	100	%
	60	TD Band	-	5.0	%

Note

- To operate in torque control mode, basic operation conditions must be set. For more information, refer to page 195.
- The torque control cannot be used in a low speed regeneration area or low load conditions.
- If you change the rotation direction while operating, an over current trip or low speed reverse direction error will be generated.

Torque reference setting option

The torque reference can be set using the same method as the target frequency setting. If Torque Control Mode is selected, the target frequency is not used.

Group	Code	Name	LCD Display	Parameter Setting		Unit
dr	02	Torque command	Cmd Torque	-180-180		%
	08	Torque reference setting	Trq Ref Src	0	Keypad-1	-
				1	Keypad-2	
				2	V1	
				4	V2	
				5	I2	
				6	Int 485	
				8	FieldBus	
				9	UserSeqLink	
				12	Pulse	
Cn	62	Speed limit setting	Speed LmtSrc	0	Keypad-1	-
				1	Keypad-2	
				2	V1	
				4	V2	
				5	I2	
				6	Int 485	
				7	FieldBus	
				8	UserSeqLink	
	63	Positive-direction speed limit	FWD Speed Lmt	0-Maximum frequency		Hz
	64	Negative-direction speed limit	REV Speed Lmt	0- Maximum frequency		Hz
	65	Speed limit operation gain	Speed Lmt Gain	100-5000		%
In	02	Torque at maximum analog input	Torque at 100%	-12.00-12.00		mA
CNF*	21	Monitor mode display 1	Monitor Line-1	1	Speed	
	22	Monitor mode display 2	Monitor Line-2	2	Output Current	
	23	Monitor mode display 3	Monitor Line-3	3	Output Voltage	

*Available on LCD keypad only.

Torque reference setting details

<table>
<tr><th>Code</th><th>Description</th></tr>
<tr><td>dr-08</td><td>Select an input method to use as the torque reference.
<table>
<tr><th colspan="2">Parameter Setting</th><th>Description</th></tr>
<tr><td>0</td><td>Keypad-1</td><td rowspan="2">Sets the torque reference with the keypad.</td></tr>
<tr><td>1</td><td>Keypad-2</td></tr>
<tr><td>2,4,5</td><td>V1,V2,I2</td><td>Sets the torque reference using the voltage or current input terminal of the terminal block.</td></tr>
<tr><td>6</td><td>Int 485</td><td>Sets the torque reference with the communication terminal of the terminal block.</td></tr>
<tr><td>8</td><td>FieldBus</td><td>Input the torque reference using the inverter's FieldBus option.</td></tr>
<tr><td>9</td><td>UserSeqLink</td><td>Enters torque reference by linking common area with the user sequence output.</td></tr>
<tr><td>12</td><td>Pulse</td><td>Input the torque reference using the pulse input on the inverter's terminal block.</td></tr>
</table></td></tr>
<tr><td>Cn-02</td><td>The torque reference can be set up to 180% of the maximum rated motor torque.</td></tr>
<tr><td>In-02</td><td>Sets the maximum torque. You can check the set maximum torque in Monitor (MON) mode.</td></tr>
<tr><td>CNF-21–23</td><td>Select a parameter from the Config(CNF) mode and then select(19 Torque Ref).</td></tr>
</table>

Speed limit details

<table>
<tr><th>Code</th><th>Description</th></tr>
<tr><td>Cn-62</td><td>Select a method for setting the speed limit value.
<table>
<tr><th colspan="2">Parameter Setting</th><th>Description</th></tr>
<tr><td>0</td><td>Keypad-1</td><td rowspan="2">Sets the speed limit value with the keypad.</td></tr>
<tr><td>1</td><td>Keypad-2</td></tr>
<tr><td>2,4,5</td><td>V1,V2,I2</td><td rowspan="4">Sets the speed limit value using the same method as the frequency command. You can check the setting in Monitor (MON) mode.</td></tr>
<tr><td>6</td><td>Int 485</td></tr>
<tr><td>7</td><td>FieldBus</td></tr>
<tr><td>8</td><td>UserSeqLink</td></tr>
</table></td></tr>
<tr><td>Cn-63</td><td>Sets the positive-direction speed limit value.</td></tr>
<tr><td>Cn-64</td><td>Sets the negative-direction speed limit value.</td></tr>
<tr><td>Cn-65</td><td>Sets the decrease rate of the torque reference when the motor speed exceeds the speed limit value.</td></tr>
<tr><td>CNF-21~23</td><td>Select a parameter from the Config (CNF) mode and then select21 Torque Bias.</td></tr>
</table>

5.14 Energy Saving Operation

5.14.1 Manual Energy Saving Operation

If the inverter output current is lower than the current which is set at bA.14 (Noload Curr), the output voltage must be reduced as low as the level set at Ad.51 (Energy Save). The voltage before the energy saving operation starts will become the base value of the percentage. Manual energy saving operation will not be carried out during acceleration and deceleration.

Group	Code	Name	LCD Display	Parameter Setting		Setting Range	Unit
Ad	50	Energy saving operation	E-Save Mode	1	Manual	-	-
	51	Energy saving amount	Energy Save	30		0–30	%

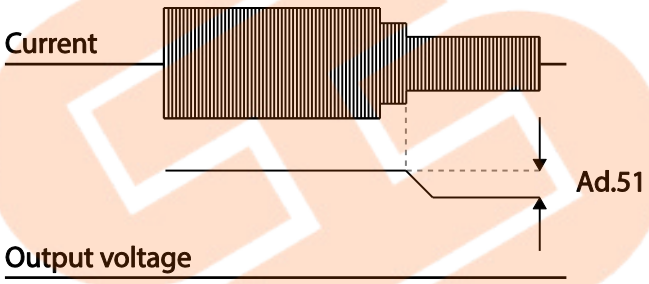

5.14.2 Automatic Energy Saving Operation

The amount of energy saving can be automatically calculated based on the rated motor current (bA.13) and the no-load current (bA.14). From the calculations, the output voltage can be adjusted.

Group	Code	Name	LCD Display	Parameter Setting		Setting Range	Unit
Ad	50	Energy saving operation	E-Save Mode	2	Auto	-	-

Caution

If operation frequency is changed or acceleration and /deceleration is carried out by a stop command during the energy saving operation, the actual Acc/Dec time may take longer than the set Acc/Dec time due to the time required to return to the gerneral operation from the energy saving operation.
The energy saving operation does not apply to the web version.

5.15 Speed Search Operation

This operation is used to prevent fault trips that can occur while the inverter output voltage is disconnected and the motor is idling. Because this feature estimates the motor rotation speed based on the inverter output current, it does not give the exact speed.

Group	Code	Name	LCD Display	Parameter Setting		Setting Range	Unit
Cn	69	PM speed search pulse current	SS Pulse Curr	15		10~100	%
	70	Speed search mode	SS Mode	0	Flying Start-1	-	-
				1	Flying Start-2		
				2	Flying Start-3		
	71	Speed search operation selection	Speed Search	0000*		-	bit
	72	Speed search reference current	SS Sup-Current	-	Below 75kW	80-200	%
	73	Speed search proportional gain	SS P-Gain	100		0–9999	-
	74	Speed search integral gain	SS I-Gain	200		0–9999	-
	75	Output block time before speed search	SS Block Time	1.0		0–60	sec
OU	31	Multi-function relay 1 item	Relay 1	19	Speed Search	-	-
	33	Multi-function output 1 item	Q1 Define				

*Displayed as 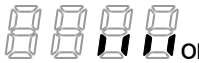 on the Keypad.

Speed Search Operation Setting Details

Code	Description
Cn.69 SS Pulse Curr	Sets the speed search current based on the motor's rated current. This parameter is only displayed when dr.09 (Control Mode) is set to 6 (PM Sensorless).

<table>
<tr><th>Code</th><th>Description</th></tr>
<tr><td>Cn.70 SS Mode</td><td>Select a speed search type.
<table>
<tr><th colspan="2">Setting</th><th>Function</th></tr>
<tr><td>0</td><td>Flying Start-1</td><td>The speed search is carried out as it controls the inverter output current during idling below the Cn.72 (SS Sup-Current) parameter setting. If the direction of the idling motor and the direction of operation command at restart are the same, a stable speed search function can be performed at about 10 Hz or lower. However, if the direction of the idling motor and the direction of operation command at restart are different, the speed search does not produce a satisfactory result because the direction of idling cannot be established.</td></tr>
<tr><td>1</td><td>Flying Start-2</td><td>The speed search is carried out as it PI controls the ripple current which is generated by the counter electromotive force during no-load rotation. Because this mode establishes the direction of the idling motor (forward/reverse), the speed search function is stable regardless of the direction of the idling motor and direction of operation command. However because the ripple current is used which is generated by the counter electromotive force at idle (the counter electromotive force is proportional to the idle speed), the idle frequency is not determined accurately and re-acceleration may start from zero speed when the speed search is performed for the idling motor at low speed (about 10 - 15 Hz, though it depends on motor characteristics).</td></tr>
<tr><td>2</td><td>Flying Start-3</td><td>This speed search is available when operating a PM synchronous motor. It is used when dr.09 (Control Mode) is set to 6 (PM Sensorless).</td></tr>
</table></td></tr>
<tr><td>Cn.71 Speed Search</td><td>Speed search can be selected from the following 4 options. If the top display segment is on it is enabled (On), and if the bottom segment is on it is disabled (Off).
<table>
<tr><th>Item</th><th>Bit Setting On Status</th><th>Bit setting Off Status</th></tr>
<tr><td>Keypad</td><td></td><td></td></tr>
<tr><td>LCD keypad</td><td></td><td></td></tr>
</table>
Type and Functions of Speed Search Setting
<table>
<tr><th colspan="4">Setting</th><th rowspan="2">Function</th></tr>
<tr><th>bit4</th><th>bit3</th><th>bit2</th><th>bit1</th></tr>
</table></td></tr>
</table>

Code	Description

			✓	Speed search for general acceleration
		✓		Initialization after a fault trip
	✓			Restart after instantaneous power interruption
✓				Starting with power-on

- **Speed search for general acceleration**: If bit 1 is set to 1 and the inverter operation command runs, acceleration starts with speed search operation. When the motor is rotating under load, a fault trip may occur if the operation command is run for the inverter to provide output voltage. The speed search function prevents such fault trip from occurring.

- **Initialization after a fault trip**: If Bit 2 is set to 1 and Pr.08 (RST Restart) is set to 1 (Yes), the speed search operation automatically accelerates the motor to the operation frequency used before the fault trip, when the [Reset] key is pressed (or the terminal block is initialized) after a fault trip.

- **Automatic restart after reset of a fault trip**: If bit 3 is set to 1, and if a low voltage trip occurs due to a power interruption but the power is restored before the internal power shuts down, the speed search operation accelerates the motor back to its frequency reference before the low voltage trip.

  If an instantaneous power interruption occurs and the input power is disconnected, the inverter generates a low voltage trip and blocks the output. When the input power returns, the operation frequency before the low voltage trip and the voltage is increased by the inverter's inner PI control.

  If the current increases above the value set at Cn.72, the voltage stops increasing and the frequency decreases (t1 zone). If the current decreases below the value set at Cn.27, the voltage increases again and the frequency stops decelerating (t2 zone). When the normal frequency and voltage are resumed, the speed search operation accelerates the motor back to its frequency reference before the fault trip.

Code	Description
	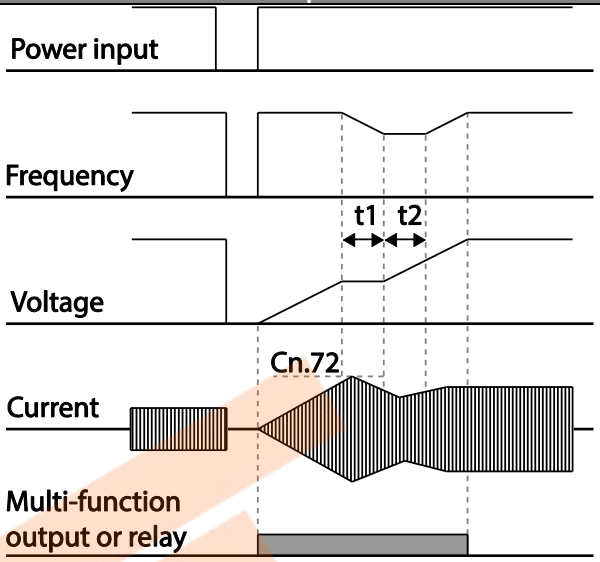 • **Starting with power-on:** Set bit 4 to 1 and Ad.10 (Power-on Run) to 1 (Yes). If inverter input power is supplied while the inverter operation command is on, the speed search operation will accelerate the motor up to the frequency reference.
Cn.72 SS Sup-Current	The amount of current flow is controlled during speed search operation based on the motor's rated current. If Cn.70 (SS mode) is set to 1 (Flying Start-2), this code is not visible.
Cn.73 SS P/I-Gain, Cn.75 SS Block Time	The P/I gain of the speed search controller can be adjusted. If Cn.70 (SS Mode) is set to 1 (Flying Start-2), different factory defaults based on motor capacity are used and defined in dr.14 (Motor Capacity).

Note

- If operated within the rated output, the S100 series inverter is designed to withstand instantaneous power interruptions within 15 ms and maintain normal operation. Based on the rated heavy load current, safe operation during an instantaneous power interruption is guaranteed for 200V and 400V inverters (whose rated input voltages are 200-230 VAC and 380-460 VAC respectively).
- The DC voltage inside the inverter may vary depending on the output load. If the power interruption time is longer than 15 ms, a low voltage trip may occur.

Caution

When operating in sensorless II mode while the starting load is in free-run, the speed search function (for general acceleration) must be set for smooth operation. If the speed search function is not set, an overcurrent trip or overload trip may occur.

5.16 Auto Restart Settings

When inverter operation stops due to a fault and a fault trip is activated, the inverter automatically restarts based on the parameter settings.

Group	Code	Name	LCD Display	Parameter Setting	Setting Range	Unit
Pr	08	Select start at trip reset	RST Restart	0 No	0–1	-
	09	Auto restart count	Retry Number	0	0–10	-
	10	Auto restart delay time	Retry Delay	1.0	0.0–60.0	s
Cn	71	Select speed search operation	Speed Search	-	0000*-1111	bit
	72	Speed search startup current	SS Sup-Current	150	80-200	%
	73	Speed search proportional gain	SS P-Gain	100	0-9999	
	74	Speed search integral gain	SS I-Gain	200	0-9999	
	75	Output block time before speed search.	SS Block Time	1.0	0.0-60.0	s

*Displayed as  on the keypad.

Auto Restart Setting Details

Code	Description
Pr.08 RST Restart, Pr.09 Retry Number, Pr.10 Retry Delay	Only operates when Pr.08 (RST Restart) is set to 1(Yes). The number of attempts to try the auto restart is set at Pr.09 (Auto Restart Count). If a fault trip occurs during operation, the inverter automatically restarts after the set time programmed at Pr.10 (Retry Delay). At each restart, the inverter counts the number of tries and subtracts it from the number set at Pr.09 until the retry number count reaches 0. After an auto restart, if a fault trip does not occur within 60 sec, it will increase the restart count number. The maximum count number is limited by the number set at Pr.09 (Auto Restart Count). If the inverter stops due to low voltage, emergency stop (Bx), inverter overheating, or hardware diagnosis, an auto restart is not activated. At auto restart, the acceleration options are identical to those of speed search operation. Codes Cn.72-75 can be set based on the load. Information about the speed search function can be found at *5.15 Speed Search Operation* on page *213*.

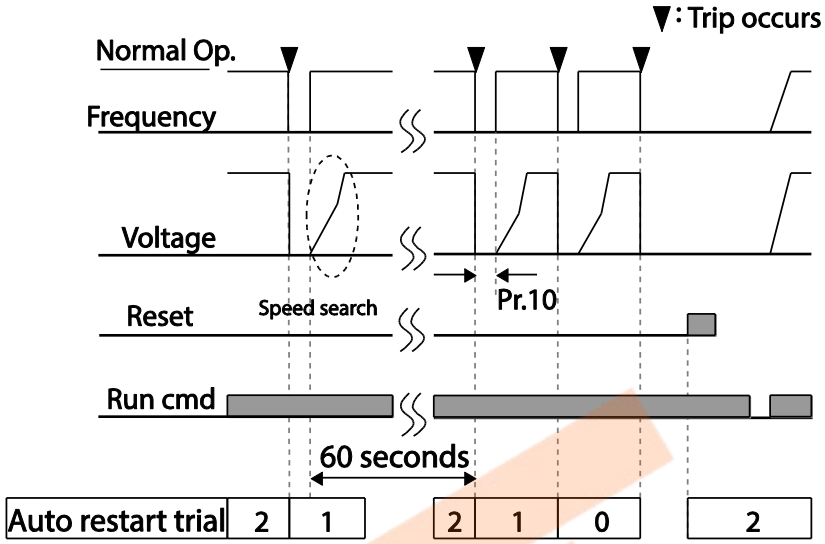

[Example of auto restart with a setting of 2]

Caution

If the auto restart number is set, be careful when the inverter resets from a fault trip. The motor may automatically start to rotate.

5.17 Operational Noise Settings (carrier frequency settings)

Group	Code	Name	LCD Display	Parameter Setting		Setting Range	Unit
Cn	04	Carrier Frequency	Carrier Freq	3.0		1.0-15.0	kHz
	05	Switching Mode	PWM* Mode	0	Normal PWM	0-1	-

* PWM: Pulse width modulation

Operational Noise Setting Details

Code	Description
Cn.04 Carrier Freq	Adjust motor operational noise by changing carrier frequency settings. Power transistors (IGBT) in the inverter generate and supply high frequency switching voltage to the motor. The switching speed in this process refers to the carrier frequency. If the carrier frequency is set high, it reduces operational noise from the motor, and if the carrier frequency is set low, it increases operational noise from the motor.

<table>
<tr><th>Code</th><th>Description</th></tr>
<tr><td>Cn.05 PWM Mode</td><td>The heat loss and leakage current from the inverter can be reduced by changing the load rate option at Cn.05 (PWM Mode). Selecting 1 (LowLeakage PWM) reduces heat loss and leakage current, compared to when 0 (Normal PWM) is selected. However, it increases the motor noise. Low leakage PWM uses 2 phase PWM modulation mode, which helps minimize degradation and reduces switching loss by approximately 30%.
<table>
<tr><td rowspan="2">Item</td><td colspan="2">Carrier frequency</td></tr>
<tr><td>1.0kHz</td><td>15kHz</td></tr>
<tr><td></td><td>Low Leakage PWM</td><td>Normal PWM</td></tr>
<tr><td>Motor noise</td><td>↑</td><td>↓</td></tr>
<tr><td>Heat generation</td><td>↓</td><td>↑</td></tr>
<tr><td>Noise generation</td><td>↓</td><td>↑</td></tr>
<tr><td>Leakage current</td><td>↓</td><td>↑</td></tr>
</table>
</td></tr>
</table>

Note

S100 Series Inverter Derating Standard

- S100 inverter is designed to respond to two types of load rates. Heavy load (heavy duty) and normal load (normal duty). The overload rate represents an acceptable load amount that exceeds rated load, and is expressed in a ratio based on the rated load and the duration. The overload capacity on the S100 series inverter is 150%/1min for heavy loads, and 120%/1min for normal loads.
- The current rating differs from the load rating, as it also has an ambient temperature limit. For derating specifications, refer to *11.8 Continuous Rated Current Derating* on page *444.*
- Current rating for ambient temperature at normal load operation.

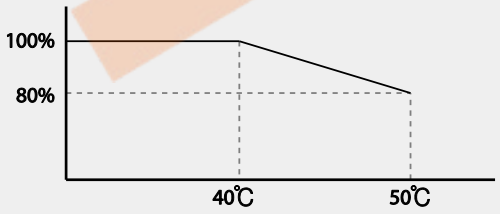

[Ambient temperature versus current rating at normal load]

- Guaranteed maximum carrier frequencies for current rating by load.

Inverter capacity	Normal load	Heavy load
0.4–22kW	2kHz	6kHz
30–45kW	2kHz	6kHz
55–75kW	2kHz	4kHz

5.18 2nd Motor Operation

The 2nd motor operation is used when a single inverter switch operates two motors. Using the 2nd motor operation, a parameter for the 2nd motor is set. The 2nd motor is operated when a multi-function terminal input defined as a 2nd motor function is turned on.

Group	Code	Name	LCD Display	Parameter Setting		Setting Range	Unit
In	65- 71	Px terminal configuration	Px Define (Px: P1–P7)	26	2nd Motor	-	-

2nd Motor Operation Setting Details

Code	Description
In.65–71 Px Define	Set one of the the multi-function input terminals (P1-P5) to 26 (2nd Motor) to display M2 (2nd motor group) group. An input signal to a multi-function terminal set to 2nd motor will operate the motor according to the code settings listed below. However, if the inverter is in operation, input signals to the multi-function terminals will not read as a 2nd motor parameter. Pr.50 (Stall Prevent) must be set first, before M2.28 (M2-Stall Lev) settings can be used. Also, Pr.40 (ETH Trip Sel) must be set first, before M2.29 (M2-ETH 1min) and M2.30 (M2.ETH Cont) settings.

Parameter Setting at Multi-function Terminal Input on a 2nd Motor

Code	Description	Code	Description
M2.04 Acc Time	Acceleration time	M2.16 Inertia Rt	Load inertia rate
M2.05 Dec Time	Deceleration time	M2.17 Rs	Stator resistance
M2.06 Capacity	Motor capacity	M2.18 Lsigma	Leakage inductance
M2.07 Base Freq	Motor base frequency	M2.19 Ls	Stator inductance
M2.08 Ctrl Mode	Control mode	M2.20 Tr	Rotor time constant
M2.10 Pole Num	Pole number	M2.25 V/F Patt	V/F pattern
M2.11 Rate Slip	Rated slip	M2.26 Fwd Boost	Forward torque boost
M2.12 Rated Curr	Rated current	M2.27 Rev Boost	Reverse torque boost
M2.13 Noload Curr	No-load current	M2.28 Stall Lev	Stall prevention level
M2.14 Rated Volt	Motor rated voltage	M2.29 ETH 1min	Motor heat protection 1min rating
M2.15 Efficiency	Motor efficiency	M2.30 ETH Cont	Motor heat protection continuous rating

Example - 2nd Motor Operation

Use the 2nd motor operation when switching operation between a 7.5kW motor and a secondary 3.7kW motor connected to terminal P3. Refer to the following settings.

Group	Code	Name	LCD Display	Parameter Setting		Setting Range	Uni
In	67	Terminal P3 configuration	P3 Define	26	2nd Motor	-	-
M2	06	Motor capacity	M2-Capacity	-	3.7kW	-	-
	08	Control mode	M2-Ctrl Mode	0	V/F	-	-

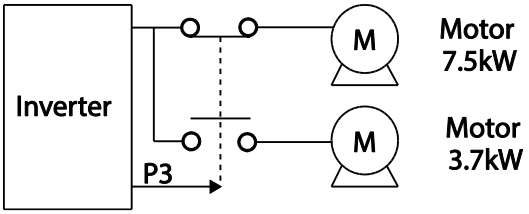

5.19 Supply Power Transition

Supply power transition is used to switch the power source for the motor connected to the inverter from the inverter output power to the main supply power source (commercial power source), or vice versa.

Group	Code	Name	LCD Display	Parameter Setting		Setting Range	Unit
In	65–71	Px terminal configuration	Px Define(Px: P1–P7)	16	Exchange	-	-
OU	31	Multi-function relay1 items	Relay1	17	Inverter Line	-	-
	33	Multi-function output1 items	Q1 Define	18	Comm Line	-	-

Supply Power Transition Setting Details

Code	Description
In.65–71 Px Define	When the motor power source changes from inverter output to main supply power, select a terminal to use and set the code value to 16 (Exchange). Power will be switched when the selected terminal is on. To reverse the transition, switch off the terminal.

Code	Description
OU.31 Realy 1 Define, OU.33 Q1 Define	Set multi-function relay or multi-function output to 17 (Inverter Line) or 18 (COMM line). Relay operation sequence is as follows. 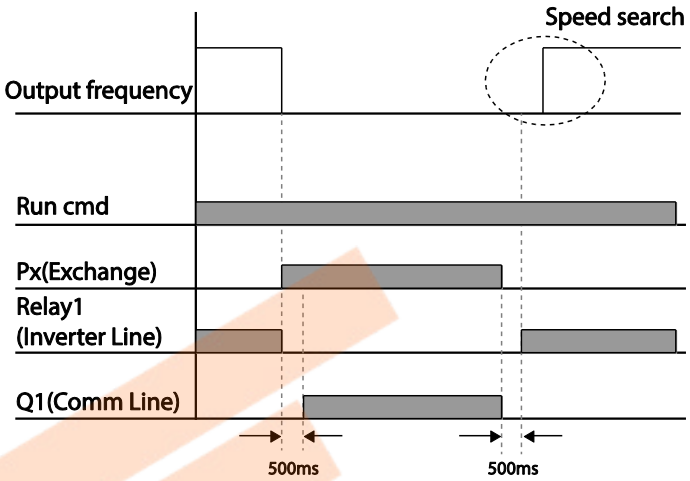

5.20 Cooling Fan Control

This function turns the inverter's heat-sink cooling fan on and off. It is used in situations where the load stops and starts frequently, or noise free environment is required. The correct use of cooling fan control can extend the cooling fan's life.

Group	Code	Name	LCD Display	Parameter Setting		Setting Range	Unit
Ad	64	Cooling fan control	FAN Control	0	During Run	0-2	-

Cooling Fan Control Detail Settings

Code	Description		
	Settings		Description
Ad.64 Fan Control	0	During Run	Cooling fan runs when the power is supplied to the inverter and the operation command is on. The cooling fan stops when the power is supplied to the inverter and the operation command is off. When the inverter heat sink temperature is higher than its set value, the cooling fan operates automatically regardless of its operation status.
	1	Always On	Cooling fan runs constantly if the power is supplied to the inverter.

Code	Description		
	2	Temp Control	With power connected and the run operation command on, if the setting is in Temp Control, the cooling fan will not operate unless the temperature in the heat sink reaches the set temperature.

Note

Despite setting Ad.64 to 0(During Run), if the heat sink temperature reaches a set level by current input harmonic wave or noise, the cooling fan may run as a protection function.

5.21 Input Power Frequency and Voltage Settings

Select the frequency for inverter input power. If the frequency changes from 60Hz to 50Hz, all other frequency (or RPM) settings including the maximum frequency, base frequency etc., will change to 50Hz. Likewise, changing the input power frequency setting from 50Hz to 60Hz will change all related function item settings from 50Hz to 60Hz.

Group	Code	Name	LCD Display	Parameter Setting		Setting Range	Unit
bA	10	Input power frequency	60/50 Hz Sel	0	60Hz	0-1	-

Set Inverter input power voltage at bA.19. Low voltage fault trip level changes automatically to the set voltage standard.

Group	Code	Name	LCD Display	Parameter Setting		Setting Range	Unit
bA	19	Input power voltage	AC Input Volt	220V	220	170–240	V
				400V	380	320–480	

5.22 Read, Write, and Save Parameters

Use read, write and save function parameters on the inverter to copy parameters from the inverter to the LCD loader or from the LCD loader to the inverter. The 7-Segment keypad does not support this function.

Group	Code	Name	LCD Display	Parameter Setting		Setting Range	Unit
dr	85*	Parameter read	-	1	Yes	-	-

Group	Code	Name	LCD Display	Parameter Setting		Setting Range	Unit
	86*	Parameter write	-	1	Yes	-	-
	92**	Parameter save	-	1	Yes	-	-
CNF***	46	Parameter read	Parameter Read	1	Yes	-	-
	47	Parameter write	Parameter Write	1	Yes	-	-
	48	Parameter save	Parameter Save	1	Yes	-	-

* Available on remote keypad only
**Available on keypad only
*** Available on LCD loader only

Read, Write, and Save Parameter Setting Details

Code	Description
dr.85, CNF-46 Parameter Read	Copies saved parameters from the inverter to the LCD loader. Saved parameters on the LCD loader will be deleted and replaced with copied parameters.
dr.86, CNF-47 Parameter Write	Copies saved parameters from the LCD loader to the inverter. Saved parameters on the inverter will be deleted and replaced with copied parameters. If an error occurs during parameter writing, previous saved data will be used. If there is no saved data on the LCD loader, 'EEP Rom Empty' message will be displayed.
dr.93, CNF-48 Parameter Save	As parameters set during communication transmission are saved to RAM, the setting values will be lost if the power goes off and on. When setting parameters during communication transmission, select 1 (Yes) from CNF-48 code to save the set parameter.

Caution

If you want to read and write the parameters of "Opt Parameter" in the communication function group (CM) while using communication option card, refer to the following:

1. The "Opt Parameter" settings in the CM group are saved as options, so the CM-94 Comm Update must be performed to change the parameters.
2. To read and write the parameters of "Opt Parameter" in the CM group, parameter save must be performed before parameter read.

5.23 Parameter Initialization

User changes to parameters can be initialized (reset) to factory default settings on all or selected groups. However, during a fault trip situation or operation, parameters cannot be initialized.

Group	Code	Name	LCD Display	Parameter Setting		Setting Range	Unit
dr*	93	Parameter initialization	-	0	No	0-16	
CNF**	40	Parameter initialization	Parameter Init	0	No	0-16	

* For keypad
**For LCD loader

Parameter Initialization Setting Details

Code	Description
dr.93, CNF-40 Parameter Init	

Setting		LCD Display	Function
0	No	No	-
1	Initialize all groups	All Grp	Initialize all data. Select 1(All Grp) and press [PROG/ENT] key to start initialization. On completion, 0(No) will be displayed.
2	Initialize dr group	DRV Grp	Initialize data by groups. Select initialize group and press [PROG/ENT] key to start initialization. On completion, 0(No) will be displayed.
3	Initialize bA group	BAS Grp	
4	Initialize Ad group	ADV Grp	
5	Initialize Cn group	CON Grp	
6	Initialize In group	IN Grp	
7	Initialize OU group	OUT Grp	
8	Initialize CM group	COM Grp	
9	Initialize AP group	APP Grp	
12	Initialize Pr group	PRT Grp	
13	Initialize M2 group	M2 Grp	
14	Initialize US group	US Grp	
15	Initialize UF group	UF Grp	
16	Initialize OperationGroup	SPS Grp	

5.24 Parameter View Lock

Use parameter view lock to hide parameters after registering and entering a user password. This function is only available on the LCD loader.

Group	Code	Name	LCD Display	Parameter Setting	Setting Range	Unit
CNF*	50	Parameter view lock	View Lock Set	Unlocked	0–9999	
	51	Parameter view lock password	View Lock Pw	Password	0–9999	

Parameter View Lock Setting Details

<table>
<tr><th>Code</th><th>Description</th></tr>
<tr><td>CNF-51 View Lock Pw</td><td>Register a password to allow access to parameter view lock. Follow the steps below to register a password.
<table>
<tr><th>No</th><th>Procedure</th></tr>
<tr><td>1</td><td>[PROG/ENT] key on CNF-51 code will show the previous password input window. If registration is made for the first time, enter 0. It is the factory default.</td></tr>
<tr><td>2</td><td>If a password had been set, enter the saved password.</td></tr>
<tr><td>3</td><td>If the entered password matches the saved password, a new window prompting the user to enter a new password will be displayed (the process will not progress to the next stage until the user enters a valid password).</td></tr>
<tr><td>4</td><td>Register a new password.</td></tr>
<tr><td>5</td><td>After registration, code CNF-51 will be displayed.</td></tr>
</table></td></tr>
<tr><td>CNF-50 View Lock Set</td><td>To enable parameter view lock, enter a registered password. [Locked] sign will be displayed on the screen to indicate that parameter view lock is enabled. To disable parameter view lock, re-enter the password. The [locked] sign will disappear.</td></tr>
</table>

5.25 Parameter Lock

Use parameter lock to prevent unauthorized modification of parameter settings. To enable parameter lock, register and enter a user password first.

Group	Code	Name	LCD Display	Parameter Setting	Setting Range	Unit
dr*	94	Password registration	-	-	0-9999	-
	95	Parameter lock password	-	-	0-9999	-
CNF**	52	Parameter lock	Key Lock Set	Unlocked	0-9999	-
	53	Parameter lock password	Key Lock PW	Password	0-9999	-

* Available on keypad only.
** Available on LCD loader only.

Parameter Lock Setting Details

<table>
<tr><th>Code</th><th>Description</th></tr>
<tr><td>CNF-53 Key Lock Pw</td><td>Register a password to prohibit parameter modifications. Follow the procedures below to register a password.
<table>
<tr><th>No</th><th>Procedures</th></tr>
<tr><td>1</td><td>Press the [PROG/ENT] key on CNF-53 code and the saved password input window will be displayed. If password registration is being made for the first time, enter 0. It is the factory default.</td></tr>
<tr><td>2</td><td>If a saved password has been set, enter the saved password.</td></tr>
<tr><td>3</td><td>If the entered password matches the saved password, then a new window to enter a new password will be displayed. (The process will not move to next stage until the user enters a valid password).</td></tr>
<tr><td>4</td><td>Register a new password.</td></tr>
<tr><td>5</td><td>After registration, Code CNF-51 will be displayed.</td></tr>
</table></td></tr>
<tr><td>CNF-52 Key Lock Set</td><td>To enable parameter lock, enter the registered password. [Locked] sign will be displayed on the screen to indicate that prohibition is enabled. Once enabled, Pressing the [PROG/ENT] key on function code will not allow the display edit mode to run. To disable parameter modification prohibition, re-enter the password. The [Locked] sign will disappear.</td></tr>
</table>

Caution

If parameter view lock and parameter lock functions are enabled, no inverter operation related function changes can be made. It is very important that you memorize the password.

5.26 Changed Parameter Display

This feature displays all the parameters that are different from the factory defaults. Use this feature to track changed parameters.

Group	Code	Name	LCD Display	Parameter Setting		Setting Range	Unit
dr*	89	Changed parameter display	-	1	View Changed	0~1	-
CNF**	41	Changed parameter display	Changed Para	1	View Changed	0~1	-

* Available on keypad only.
** Available on LCD loader only.

Changed Parameter Display Setting Details

Code	Description		
dr-89, CNF-41 Changed Para	Setting		Function
	0	View All	Display all parameters
	1	View Changed	Display changed parameters only

5.27 User Group

Create a user defined group and register user-selected parameters from the existing function groups. The user group can carry up to a maximum of 64 parameter registrations. This function is only available on the LCD loader.

Group	Code	Name	LCD Display	Parameter Setting		Setting Range	Unit
CNF	42	Multi-function key settings	Multi Key Sel	3	UserGrp SelKey	-	-
	45	Delete all user registered codes	UserGrp AllDel	0	No	-	-

User Group Setting Details

Code	Description
CNF-42 Multi-Key Sel	Select 3(UserGrp SelKey) from the multi-function key setting options. If user group parameters are not registered, setting the multi-function key to the user group select key (UserGrp SelKey) will not display user group (USR Grp) item on the Keypad. Follow the procedures below to register parameters to a user group.

No	Procedure
1	Set CNF- 42 to 3(UserGrp SelKey). A U icon will be displayed at the top of the LCD display.
2	In the parameter mode (PAR Mode), move to the parameter you need to register and press the [MULTI] key. For example, if the [MULTI] key is pressed in the frequency reference in DRV 01 (Cmd Frequency), the screen below will be displayed.

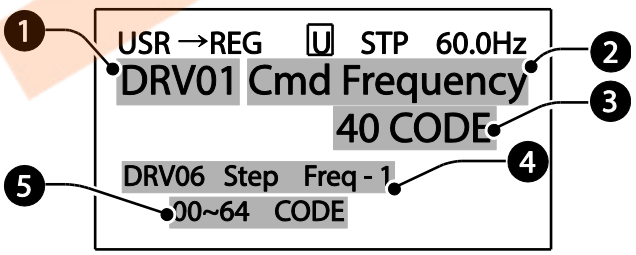

❶ Group name and code number of the parameter
❷ Name of the parameter
❸ Code number to be used in the user group. Pressing the [PROG/ENT] key on the code number (40 Code) will register DRV-01 as code 40 in the user group.
❹ Existing parameter registered as the user group code 40
❺ Setting range of the user group code. Entering 0 cancels

<table>
<tr><th>Code</th><th>Description</th></tr>
<tr><td></td><td>
<table>
<tr><td></td><td>the settings.</td></tr>
<tr><td>3</td><td>Set a code number (❸) to use to register the parameter in the user group. Select code number and press [PROG/ENT] key.</td></tr>
<tr><td>4</td><td>Changing the value in ❸ will also change the value in ❹. If no code is registered, ‘Empty Code’ will be displayed. Entering 0 cancels the settings.</td></tr>
<tr><td>5</td><td>The registered parameters are listed in the user group in U&M mode. You can register one parameter multiple times if necessary. For example, a parameter can be registered as code 2, code 11, and more in the user group.</td></tr>
</table>

Follow the procedures below to delete parameters in the user group.
<table>
<tr><th>No.</th><th>Settings</th></tr>
<tr><td>1</td><td>Set CNF- 42 to 3(UserGrp SelKey). A U icon will be displayed at the top of the LCD display.</td></tr>
<tr><td>2</td><td>In the USR group in U&M mode, move the cursor to the code that is to be deleted.</td></tr>
<tr><td>3</td><td>Press the [MULTI] key.</td></tr>
<tr><td>4</td><td>Move to YES on the deletion confirmation screen, and press the [PROG/ENT] key.</td></tr>
<tr><td>5</td><td>Deletion completed.</td></tr>
</table>
</td></tr>
<tr><td>CNF-25 UserGrp AllDel</td><td>Set to 1(Yes) to delete all registered parameters in the user group.</td></tr>
</table>

5.28 Easy Start On

Run Easy Start On to easily setup the basic motor parameters required to operate a motor in a batch. Set CNF-61(Easy Start On) to 1(Yes) to activate the feature, initialize all parameters by setting CNF-40 (Parameter Init) to 1 (All Grp), and restart the inverter to activate Easy Start On. This function is only available on the LCD loader.

Group	Code	Name	LCD Display	Parameter Setting		Setting Range	Unit
CNF	61	Parameter easy start settings	Easy Start On	1	Yes	-	-

Easy Start On Setting Details

<table>
<tr><th>Code</th><th>Description</th></tr>
<tr><td>CNF-61 Easy Start On</td><td>Follow the procedures listed below to set parameter easy start.
<table>
<tr><th>No</th><th>Procedures</th></tr>
<tr><td>1</td><td>Set CNF-61 (Easy Start On) to 1(Yes).</td></tr>
<tr><td>2</td><td>Select 1(All Grp) in CNF-40 (Parameter Init) to initialize all parameters in the inverter.</td></tr>
<tr><td>3</td><td>Restarting the inverter will activate the Easy Start On. Set the values in the following screens on the LCD keypad. To escape from the Easy Start On, press the [ESC] key.
• Start Easy Set: Select Yes.
• DRV-14 Motor Capacity: Set motor capacity.
• BAS-11 Pole Number: Set motor pole number.
• BAS-15 Rated Volt: Set motor rated voltage.
• BAS-10 60/50Hz Sel: Set motor rated frequency.
• BAS-19 AC Input Volt: Set input voltage.
• DRV-06 Cmd Source: Set command source.
• DRV-01 Cmd Frequency: Set operation frequency.
When the settings are completed, the minimum parameter setting on the motor has been made. The LCD keypay will return to a monitoring display. Now the motor can be operated with the command source set at DRV-06.</td></tr>
</table></td></tr>
</table>

5.29 Config(CNF) Mode

The config mode parameters are used to configure the LCD loader-related additional features.

Group	Code	Name	LCD Display	Parameter Setting	Setting Range	Unit
CNF	2	LCD brightness/contrast adjustment	LCD Contrast	-	-	
	10	Inverter S/W version	Inv S/W Ver	x.xx	-	
	11	Keypad S/W version	Keypad S/W Ver	x.xx	-	-
	12	Keypad title version	KPD Title Ver	x.xx	-	-
	30–32	Power slot type	Option-x Type	None	-	-
	44	Erase trip history	Erase All Trip	No	-	-
	60	Add title update	Add Title Up	No	-	-
	62	Initialize accumulated electric energy	WH Count Reset	No	-	-

Config Mode Parameter Setting Details

Code	Description
CNF-2 LCD contrast	Adjusts LCD brightness/contrast on the LCD keypad.
CNF-10 Inv S/W Ver, CNF-11 Keypad S/W Ver	Check OS version in the inverter and on the LCD keypad.
CNF-12 KPD title Ver	Checks title version on the LCD keypad.
CNF-30–32 Option-x type	Checks type of powerboard installed in 1-3 power slot.
CNF-44 Erase all trip	Deletes stored trip history.
CNF-60 Add Title Up	When inverter SW version is updated and more code is added, CNF-60 settings will add, display, and operate the added codes. Set CNF-60 to 1(Yes) and disconnect the LCD keypad from the inverter. Reconnecting the LCD keypad to the inverter updates titles.
CNF-62 WH Count Reset	Initialize accumulated electric energy consumption count.

5.30 Timer Settings

Set a multi-function input terminal to a timer and On/Off control the multi-function output and relay according to the timer settings.

Group	Code	Name	LCD Display	Parameter Setting		Setting Range	Unit
In	65–71	Px terminal configuration	Px Define (Px: P1–P7)	38	Timer In	-	-
OU	31	Multi-function relay1	Relay 1	28	Timer Out	-	-
	33	Multi-function output1	Q1 Define				
	55	Timer on delay	Timer on delay	3.00		0.00–100	sec
	56	Timer off delay	Timer off delay	1.00		0.00–100	sec

Timer Setting Details

Code	Description
In.65-71 Px Define	Choose one of the multi-function input terminals and change it to a timer terminal by setting it to 38 (Timer In).
OU.31 Relay1, OU.33 Q1 Define	Set multi-function output terminal or relay to be used as a timer to 28 (Timer out).
OU.55 TimerOn Delay, OU.56 TimerOff Delay	Input a signal (On) to the timer terminal to operate a timer output (Timer out) after the time set at OU.55 has passed. When the multi-function input terminal is off, multi-function output or relay turns off after the time set at OU.56.



5.31 Brake Control

Brake control is used to control the On/Off operation of electronic brake load system.

Group	Code	Name	LCD Display	Parameter Setting		Setting Range	Unit
dr	09	Control mode	Control Mode	0	All mode	-	-
Ad	41	Brake open current	BR Rls Curr	50.0		0.0–180%	%
	42	Brake open delay time	BR Rls Dly	1.00		0.0–10.0	sec
	44	Brake open forward frequency	BR Rls Fwd Fr	1.00		0-Maximum frequency	Hz
	45	Brake open reverse frequency	BR Rls Rev Fr	1.00		0-Maximum frequency	Hz
	46	Brake close delay time	BR Eng Dly	1.00		0.00–10.00	sec
	47	Brake close frequency	BR Eng Fr	2.00		0-Maximum frequency	Hz
OU	31	Multi-function relay1 item	Relay 1	35	BR Control:	-	-
	33	Multi-function output1 item	Q1 Define				

When brake control is activated, DC braking (Ad.12) at inverter start and dwell operation (Ad.20-23) do not operate.

- **Brake release sequence:** During motor stop state, if an operation command is entered, the inverter accelerates up to brake release frequency (Ad.44- 45) in forward or in reverse direction. After reaching brake release frequency, if motor current reaches brake release current (BR Rls Curr), the output relay or multi function output terminal for brake control sends a release signal. Once the signal has been sent, acceleration will begin after maintaining frequency for brake release delay time (BR Rls Dly).
- **Brake engage sequence:** If a stop command is sent during operation, the motor decelerates. Once the output frequency reaches brake engage frequency (BR Eng Fr), the motor stops deceleration and sends out a brake engage signal to a preset output terminal. Frequency is maintained for the brake engage delay time (BR Eng Dly) and will become 0 afterwards. If DC braking time (Ad.15) and DC braking resistance (Ad.16) are set, inverter output is blocked after DC braking. For DC braking, refer to

4.17.2 Stop After DC Braking on page *139*.

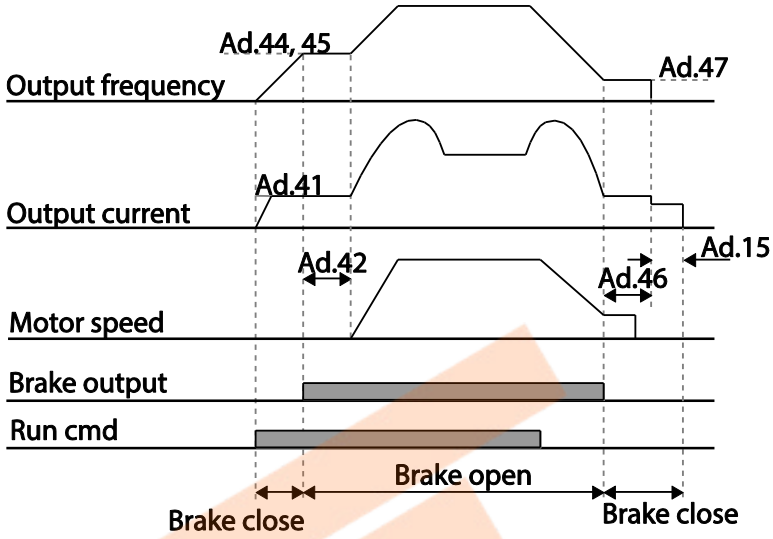

5.32 Multi-Function Output On/Off Control

Set reference values (on/off level) for analog input and control output relay or multi-function output terminal on/off status accordingly.

Group	Code	Name	LCD Display	Parameter Setting		Setting Range	Unit
Ad	66	Output terminal on/off control mode	On/Off Ctrl Src	1	V1	-	-
	67	Output terminal on level	On-C Level	90.00		Output terminal off level-100.00%	%
	68	Output terminal off level	Off-C Level	10.00		0.00-Output terminal on level	%
OU	31	Multi-function relay1 item	Relay 1	34	On/Off	-	-
	33	Multi-function output1 item	Q1 Define				

Multi-function Output On/Off Control Setting Details

Code	Description
Ad.66 On/Off Ctrl Src	Select analog input On/Off control.

Code	Description
Ad.67 On-C Level , Ad.68 Off-C Level	Set On/Off level at the output terminal.

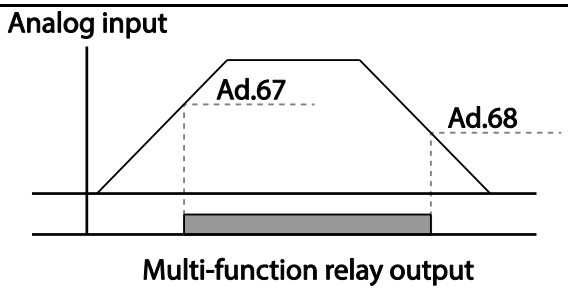

5.33 Press Regeneration Prevention

Press regeneration prevention is used during press operations to prevent braking during the regeneration process. If motor regeneration occurs during a press operation, motor operation speed automatically goes up to avoid the regeneration zone.

Group	Code	Name	LCD Display	Parameter Setting		Setting Range	Unit
Ad	74	Select press regeneration prevention for press	RegenAvd Sel	0	No	0–1	-
	75	Press regeneration prevention operation voltage level	RegenAvd Level	350V		200V: 300-400V	V
				700V		400V: 600-800V	
	76	Press regeneration prevention compensation frequency limit	CompFreq Limit	1.00(Hz)		0.00– 10.00Hz	Hz
	77	Press regeneration prevention P gain	RegenAvd Pgain	50.0(%)		0 .0– 100.0%	%
	78	Press regeneration prevention I gain	RegenAvd Igain	500(ms)		20–30000ms	ms

Press Regeneration Prevention Setting Details

Code	Description
Ad.74 RegenAvd Sel	Frequent regeneration voltage from a press load during constant speed motor operation may force excessive work on the brake unit which may damage or shorten the brake life. To prevent this situation, select Ad.74 (RegenAvd Sel) to control DC link voltage and disable the brake unit operation.

Code	Description
Ad.75 RegenAvd Level	Set brake operation prevention level voltage when the DC link voltage goes up due to regeneration.
Ad.76 CompFreq Limit	Set alternative frequency width that can replace actual operation frequency during regeneration prevention.
Ad.77 RegenAvd Pgain, Ad.78 RegenAvd Igain	To prevent regeneration zone, set P gain/I gain in the DC link voltage supress PI controller.

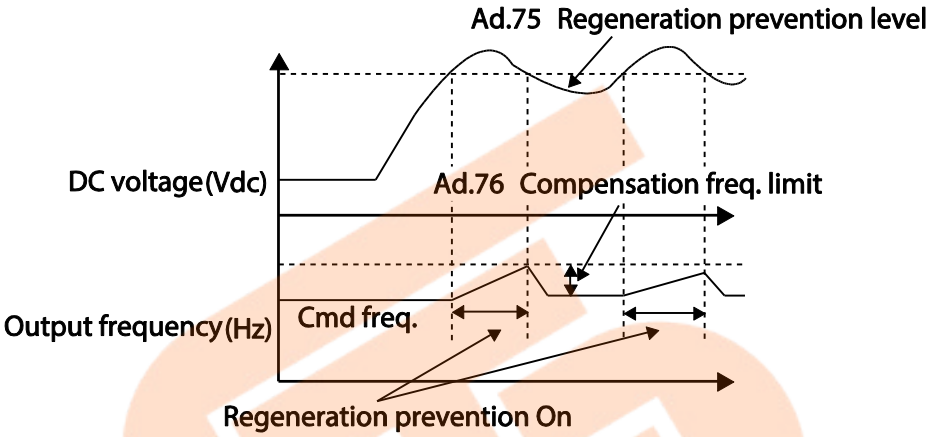

Note

Press regeneration prevention does not operate during accelerations or decelerations, but it only operates during constant speed motor operation. When regeneration prevention is activated, output frequency may change within the range set at Ad.76 (CompFreq Limit).

5.34 Analog Output

An analog output terminal provides output of 0-10V voltage, 4-20mA current, or 0-32kHz pulse.

5.34.1 Voltage and Current Analog Output

An output size can be adjusted by selecting an output option at AO1, AO2 (Analog Output) terminal. Set the analog voltage/current output terminal setting switch (SW3) to change the output type (voltage/current).

AO1: 0~10V / 4~20mA Output

Group	Code	Name	LCD Display	Parameter Setting	Setting Range	Unit
OU	01	Analog output1	AO1 Mode	0 Frequency	0–15	-
	02	Analog output1 gain	AO1 Gain	100.0	-1000.0–1000.0	%
	03	Analog output1 bias	AO1 Bias	0.0	-100.0–100.0	%
	04	Analog output1 filter	AO1 Filter	5	0-10000	ms
	05	Analog constant output1	AO1 Const %	0.0	0.0-100.0	%
	06	Analog output1 monitor	AO1 Monitor	0.0	0.0-1000.0	%

AO2: 0~10V Output

Group	Code	Name	LCD Display	Parameter Setting	Setting Range	Unit
OU	07	Analog output2	AO2 Mode	0 Frequency	0–15	-
	08	Analog output2 gain	AO2 Gain	100.0	-1000.0–1000.0	%
	09	Analog output2 bias	AO2 Bias	0.0	-100.0–100.0	%
	10	Analog output2 filter	AO2 Filter	5	0-10000	ms
	11	Analog constant output2	AO2 Const %	0.0	0.0-100.0	%
	12	Analog output2 monitor	AO2 Monitor	0.0	0.0-1000.0	%

Voltage and Current Analog Output Setting Details

<table>
<tr><th>Code</th><th>Description</th></tr>
<tr><td>OU.01 AO1 Mode,
OU.07 AO2 Mode</td><td>Select a constant value for output. The following example for output voltage setting.
<table>
<tr><th colspan="2">Setting</th><th>Function</th></tr>
<tr><td>0</td><td>Frequency</td><td>Outputs operation frequency as a standard.
10V output is made from the frequency set at dr.20(Max Freq)</td></tr>
<tr><td>1</td><td>Output Current</td><td>10V output is made from 200% of inverter rated current (heavy load).</td></tr>
<tr><td>2</td><td>Output Voltage</td><td>Sets the outputs based on the inverter output voltage. 10V output is made from a set voltage in bA.15 (Rated V).
If 0V is set in bA.15, 200V/240V/400V models output 10V based on the actual input voltage (480V).</td></tr>
<tr><td>3</td><td>DC Link Volt</td><td>Outputs inverter DC link voltage as a standard.
Outputs 10V when the DC link voltage is 410Vdc for 200V models, and 820Vdc for 400V models.</td></tr>
</table></td></tr>
</table>

<table>
<tr><th>Code</th><th colspan="3">Description</th></tr>
<tr><td></td><td colspan="3"><table>
<tr><td>4</td><td>Torque</td><td>Outputs the generated torque as a standard. Outputs 10V at 250% of motor rated torque.</td></tr>
<tr><td>5</td><td>Ouput Power</td><td>Monitors output wattage. 200% of rated output is the maximum display voltage (10V).</td></tr>
<tr><td>6</td><td>Idse</td><td>Outputs the maximum voltage at 200% of no load current.</td></tr>
<tr><td>7</td><td>Iqse</td><td>Outputs the maximum voltage at 250% of rated torque current
$rated\ torque\ current$
$= \sqrt{rated\ current^2 - no\ load\ current^2}$</td></tr>
<tr><td>8</td><td>Target Freq</td><td>Outputs set frequency as a standard. Outputs 10V at the maximum frequency (dr.20).</td></tr>
<tr><td>9</td><td>Ramp Freq</td><td>Outputs frequency calculated with Acc/Dec function as a standard. May vary with actual output frequency. Outputs 10V.</td></tr>
<tr><td>12</td><td>PID Ref Value</td><td>Outputs command value of a PID controller as a standard. Outputs approximately 6.6V at 100%.</td></tr>
<tr><td>13</td><td>PID Fdk Value</td><td>Outputs feedback volume of a PID controller as a standard. Outputs approximately 6.6V at 100%.</td></tr>
<tr><td>14</td><td>PID Output</td><td>Outputs output value of a PID controller as a standard. Outputs approximately 10V at 100%.</td></tr>
<tr><td>15</td><td>Constant</td><td>Outputs OU.05 (AO1 Const %) value as a standard.</td></tr>
</table></td></tr>
<tr><td>OU.02 AO1 Gain,
OU.03 AO1 Bias

OU.08 AO2 Gain,
OU.09 AO2 Bias</td><td colspan="3">Adjusts output value and offset. If frequency is selected as an output item, it will operate as shown below.
$$AO1 = \frac{Frequency}{MaxFreq} \times AO1\ Gain + AO1\ Bias$$
The graph below illustrates the analog voltage output (AO1) changes depend on OU.02 (AO1 Gain) and OU.3 (AO1 Bias) values. Y-axis is analog output voltage (0-10V), and X-axis is % value of the output item.

Example, if the maximum frequency set at dr.20 (Max Freq) is 60Hz and the present output frequency is 30Hz, then the x-axis value on the next graph is 50%.</td></tr>
</table>

Code	Description
	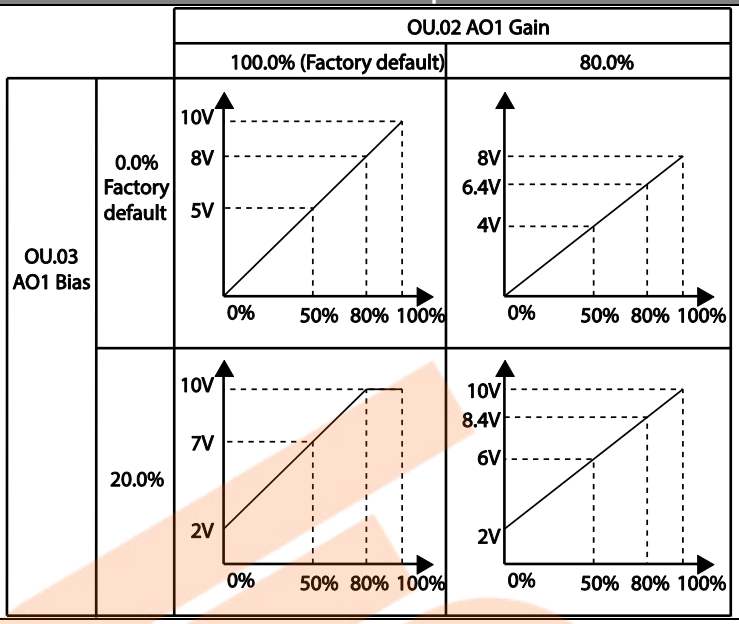
OU.04 AO1 Filter, OU.10 AO2 Filter	Set filter time constant on analog output.
OU.05 A01 Const %, OU.11 A02 Const %	If analog output at OU.01 (AO1 Mode) is set to 15(Constant), the analog voltage output is dependent on the set parameter values (0-100%).
OU.06 AO1 Monitor, OU.12 AO2 Monitor	Monitors the percentage (%) of actual analog output compared with analog output maximum value.

5.34.2 Analog Pulse Output

Output item selection and pulse size adjustment can be made for the TO (Pulse Output) terminal.

Group	Code	Name	LCD Display	Parameter Setting		Setting Range	Unit
OU	33	Multi-function output 1	Q1 define	39	TO	0–38	-
	61	Pulse output setting	TO Mode	0	Frequency	0–15	-
	62	Pulse output gain	TO Gain	100.0		-1000.0–1000.0	%
	63	Pulse output bias	TO Bias	0.0		-100.0-100.0	%
	64	Pulse output filter	TO Filter	5		0–10000	ms
	65	Pulse output constant output2	TO Const %	0.0		0.0-100.0	%
	66	Pulse output monitor	TO Monitor	0.0		0.0–1000.0	%

Analog Pulse Output Setting Details

Code	Description
OU.33 Q1 Define	In case of Standard I/O, pulse output TO and multi-function output Q1 share the same terminal. Set OU.33 to 32kHz pulse output and follow the instructions below to make wiring connections that configure the open collector output circuit. 1. Connect a 1/4W, 560Ω resistor between VR and Q1 terminals. 2. Connect EG and CM terminals. When wiring the resistor, a resistance of 560Ω or less is recommended to stably provide 32kHz pulse output. 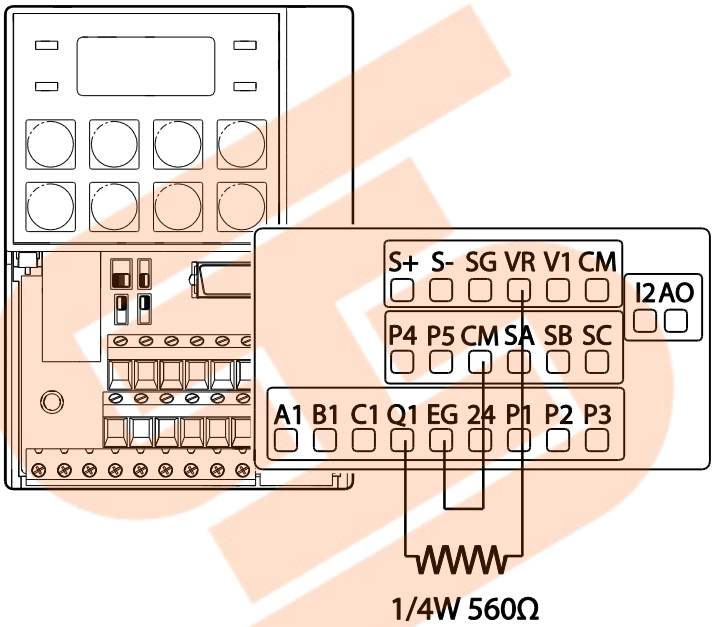 When connecting to a pulse between the S100 inverters, please connect pulse output(Q1-EG) to pulse input(TI-CM) directly without resistor and wire. • Multiple I/O< -> Multiple I/O : Connect to TO -> TI, CM -> CM • Standard I/O <-> Standard I/O : Connect to Q1 -> P5, EG -> CM • Multiple I/O <-> Standard I/O : Do not support.
OU.62 TO Gain, OU.63 TO Bias	Adjusts output value and offset. If frequency is selected as an output, it will operate as shown below. $$TO = \frac{Frequency}{MaxFreq} \times TO\ Gain + TO\ Bias$$ The following graph illustrates that the pulse output (TO) changes depend on OU.62 (TO Gain) and OU.63 (TO Bias) values. The Y-axis is an analog output current(0-32kHz), and X-axis is % value on output item. For example, if the maximum frequency set with dr.20 (Max Freq) is 60Hz

Code	Description
	and present output frequency is 30Hz, then the x-axis value on the next graph is 50%. 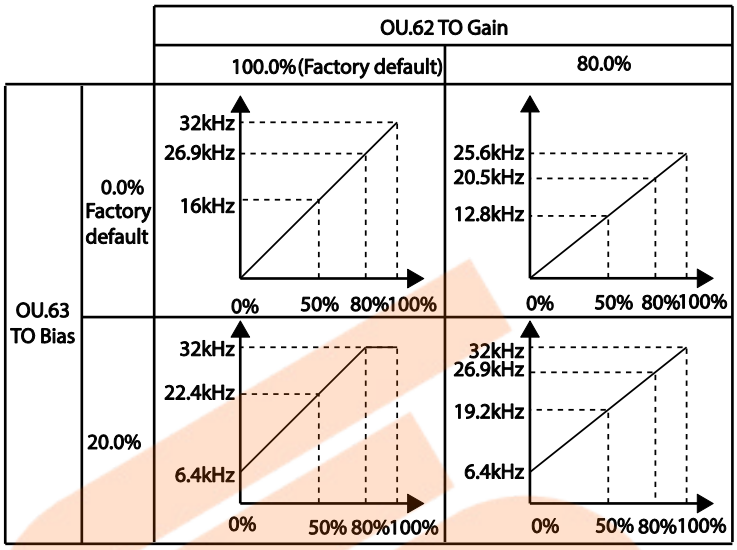
OU.64 TO Filter	Sets filter time constant on analog output.
OU.65 TO Const %	If analog output item is set to constant, the analog pulse output is dependent on the set parameter values.
OU.66 TO Monitor	Monitors analog output value. Displays the maximum output pulse (32kHz) as a percentage (%) of the standard.

Note

OU.08 AO2 Gain and OU.09 AO2 Bias Tuning Mode on 4-20mA output

1. Set OU.07 (AO2 Mode) to constant, and set OU.11 (AO2 Const %) to 0.0 %.
2. Set OU.09 (AO2 Bias) to 20.0% and then check current output. 4mA output should be displayed.
3. If the value is less than 4mA, gradually increase OU.09 (AO2 Bias) until 4mA is measured. If the value is more than 4mA, gradually decrease OU.09 (AO2 Bias) until 4mA is measured.
4. Set OU.11 AO2 Const % to 100.0%

   Set OU.08 (AO2 Gain) to 80.0% and measure current output at 20mA. If the value is less than 20mA, gradually increase OU.08 (AO2 Gain) until 20mA is measured. If the value is more than 20mA, gradually decrease OU.08 (AO2 Gain) until 20mA is measured.

The functions for each code are identical to the descriptions for the 0-10V voltage outputs with an output range 4-20mA.

5.35 Digital Output

5.35.1 Multi-function Output Terminal and Relay Settings

Group	Code	Name	LCD Display	Parameter Setting		Setting Range	Unit
OU	31	Multi-function relay1 setting	Relay 1	29	Trip	-	-
	32*	Multi-function relay2 setting	Relay 2	14	Run	-	-
	33	Multi-function output1 setting	Q1 Define	14	Run	-	-
	41	Multi-function output monitor	DO Status	-		00– 11	bit
	57	Detection frequency	FDT Frequency	30.00		0.00- Maximum frequency	Hz
	58	Detection frequency band	FDT Band	10.00			
In	65-71	Px terminal configuration	Px Define	16	Exchange	-	-

*Available for 30-75kW models only.

Multi-function Output Terminal and Relay Setting Details

Code	Description
OU.31 Relay1 OU.32 Relay2	Set relay (Relay 1, Relay 2) output options.

Setting		Function
0	None	No output signal.
1	FDT-1	Detects inverter output frequency reaching the user set frequency. Outputs a signal when the absolute value (set frequency-output frequency) < detected frequency width/2. When detected frequency width is 10Hz, FDT-1 output is as shown in the graph below.

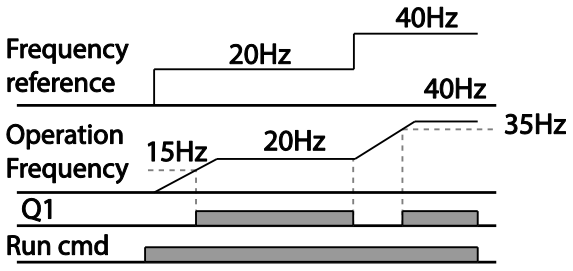

Code			Description
	2	FDT-2	Outputs a signal when the user set frequency and detected frequency (FDT Frequency) are equal, and fulfills FDT-1 condition at the same time. [Absolute value (set frequency-detected frequency) < detected frequency width/2]&[FDT-1] Detected frequency width is 10Hz. When the detected frequency is set to 30Hz, FDT-2 output is as shown in the graph below. 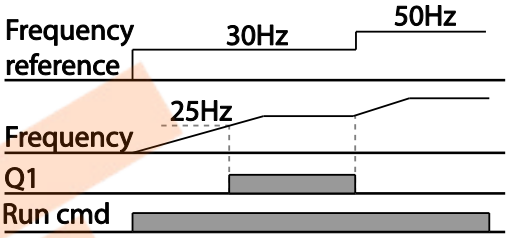
	3	FDT-3	Outputs a signal when the Absolute value (output frequency-operation frequency) < detected frequency width/2. Detected frequency width is 10Hz. When detected frequency is set to 30Hz, FDT-3 output is as shown in the graph below. 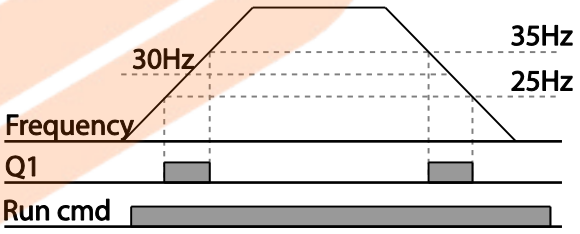
	4	FDT-4	Output signal can be separately set for acceleration and deceleration conditions. • **In acceleration:** Operation frequency≧ Detected frequency • **In deceleration:** Operation frequency>(Detected frequency-Detected frequency width/2) Detected frequency width is 10Hz. When detected frequency is set to 30Hz, FDT-4 output is as shown in the graph below.

Code	Description		
			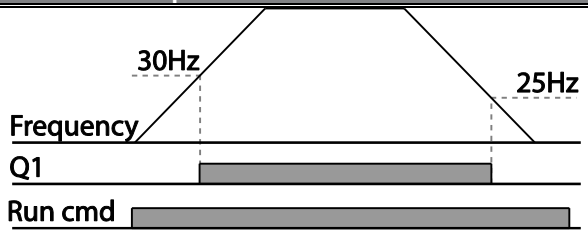
	5	Overload	Outputs a signal at motor overload.
	6	IOL	Outputs a signal when a fault is triggered from a protective function operation by inverter overload inverse proportion.
	7	Underload	Outputs a signal at load fault warning.
	8	Fan Warning	Outputs a signal at fan fault warning.
	9	Stall	Outputs a signal when a motor is overloaded and stalled.
	10	Over voltage	Outputs a signal when the inverter DC link voltage rises above the protective operation voltage.
	11	Low Voltage	Outputs a signal when the inverter DC link voltage drops below the low voltage protective level.
	12	Over Heat	Outputs signal when the inverter overheats.
	13	Lost command	Outputs a signal when there is a loss of analog input terminal and RS-485 communication command at the terminal block. Outputs a signal when communication power and expansion an I/O power card is installed, and also outputs a signal when losing analog input and communication power commands.
	14	RUN	Outputs a signal when operation command is entered and the inverter outputs voltage. No signal output during DC braking. 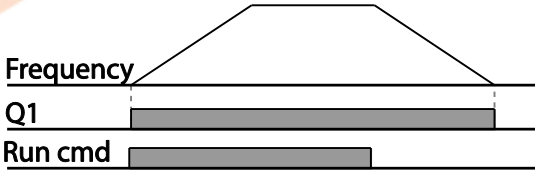
	15	Stop	Outputs a signal at operation command off, and when there is no inverter output voltage.
	16	Steady	Outputs a signal in steady operation.
	17	Inverter line	Outputs a signal while the motor is driven by the inverter line.
	18	Comm line	Outputs a signal while the motor is driven by a commercial power source. For details, refer to *0 Supply* **Power Transition** on page *221*.
	19	Speed search	Outputs a signal during inverter speed search

Code	Description		
			operation. For details, refer to *5.15 Speed Search Operation* on page *213*.
	22	Ready	Outputs signal when the inverter is in stand by operation and ready to receive an external operation command.
	28	Timer Out	A timer function to operate terminal output after a certain time by using multi-function terminal block input. For more details, refer to *5.30 Timer Settings* on page *232*.
	29	Trip	Outputs a signal after a fault trip Refer to *5.32 Multi-Function Output On/Off Control* on page *234*.
	31	DB Warn %ED	Refer to *6.2.5 Dynamic Brake (DB) Resistor Configuration* on page *267*.
	34	On/Off Control	Outputs a signal using an analog input value as a standard. Refer to *5.32 Multi-Function Output On/Off Control* on page *234*.
	35	BR Control	Outputs a brake release signal. Refer to *5.31 Brake Control* on page *233*.
	40	KEB Operating	This outputs when the energy buffering operation is started because of low voltage of the inverter's DC power section due to a power failure on the input power. (This outputs in the energy buffering state before the input power restoration regardless of KEB-1 and KEB-2 mode settings.)
OU.33 Q1 Define	Select output options for multi-function output terminal (Q1). Q1 is open collector TR output.		
OU.41 DO Status	You can check On/Off state of DO by bits.		

5.35.2 Fault Trip Output using Multi-Function Output Terminal and Relay

The inverter can output fault trip state using multi-function output terminal (Q1) and relay (Relay 1).

Group	Code	Name	LCD Display	Parameter Setting		Setting Range	Unit
OU	30	Fault trip output mode	Trip Out Mode	010		-	bit
	31	Multi-function relay1	Relay 1	29	Trip	-	-
	32*	Multi-function relay2	Relay 2	14	Run	-	-
	33	Multi-function output1	Q1 Define	14	Run	-	-
	53	Fault trip output on delay	TripOut OnDly	0.00		0.00–100.00	sec
	54	Fault trip output off delay	TripOut OffDly	0.00		0.00–100.00	sec

* Available for 30-75kW models only.

Fault Trip Output by Multi-function Output Terminal and Relay - Setting Details

<table>
<tr><th>Code</th><th>Description</th></tr>
<tr><td>OU.30 Trip Out Mode</td><td>Fault trip relay operates based on the fault trip output settings.
<table>
<tr><th>Item</th><th>bit on</th><th>bit off</th></tr>
<tr><td>Keypad</td><td></td><td></td></tr>
<tr><td>LCD keypad</td><td></td><td></td></tr>
</table>
When a fault trip occurs in the inverter, the relevant terminal and relay will operate. Depending on the fault trip type, terminal and relay operation can be configured as shown in the table below.
<table>
<tr><th colspan="3">Setting</th><th rowspan="2">Function</th></tr>
<tr><th>bit3</th><th>bit2</th><th>bit1</th></tr>
<tr><td></td><td></td><td>✓</td><td>Operates when low voltage fault trips occur</td></tr>
<tr><td></td><td>✓</td><td></td><td>Operates when fault trips other than low voltage occur</td></tr>
<tr><td>✓</td><td></td><td></td><td>Operates when auto restart fails (Pr. 08-09)</td></tr>
</table></td></tr>
<tr><td>OU.31 Relay1
OU.32 Relay2
OU.33 Q1 Define</td><td>Select fault trip output terminal/relay and select 29(Trip Mode) at codes OU. 31, 32, 33.</td></tr>
<tr><td>OU.53 TripOut On Dly,
OU.54 TripOut OffDly</td><td>If a fault trip occurs, trip relay or multi-function output operates after the time delay set in OU.53. Terminal is off with the input initialized after the time delay set in OU.53.</td></tr>
</table>

5.35.3 Multi-function Output Terminal Delay Time Settings

Set on-delay and off-delay times separately to control the output terminal and relay operation times. The delay time set at codes OU.50-51 applies to multi-function output terminal (Q1) and relay (Relay), except when the multi-function output function is in fault trip mode.

Group	Code	Name	LCD Display	Parameter Setting	Setting Range	Unit
OU	50	Multi-function output On delay	DO On Delay	0.00	0.00-100.00	s
	51	Multi-function output Off delay	DO Off Delay	0.00	0.00-100.00	s
	52	Select multi-function output terminal	DO NC/NO Sel	00*	00-11	bit

* Displayed as 0001 on keypad.

Output Terminal Delay Time Setting Details

Code	Description
OU.52 DO NC/NO Sel	Select terminal type for relay and multi-function output terminal. An additional three terminal type selection bits at the terminal block will be added when an expansion I/O is added. By setting the relevant bit to 0, it will operate A terminal (Normally Open), and setting it to 1 will operate B terminal (Normally Closed). Shown below in the table are Relay 1 and Q1 settings starting from the right bit.

Item	bit on	bit off
Keypad		
LCD keypad		

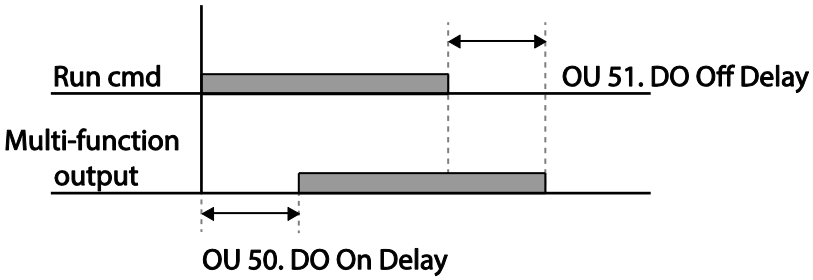

5.36 Keypad Language Settings

Select the language to be displayed on the LCD loader. Keypad S/W Ver 1.04 and above provides language selections. This setting is only available on the LCD loader.

Group	Code	Name	LCD Display	Parameter Setting		Setting Range	Unit
CNF	01	Select keypad language	Language Sel	0	English	-	-
				1	Korean		

5.37 Operation State Monitor

The inverter's operation condition can be monitored using the LCD keypad. If the monitoring option is selected in config (CNF) mode, a maximum of four items can be monitored simultaneously. Monitoring mode displays three different items on the LCD keypad, but only one item can be displayed in the status window at a time. This setting is only available on the LCD loader.

Group	Code	Name	LCD Display	Parameter Setting		Setting Range	Unit
CNF	20	Display item condition display window	Anytime Para	0	Frequency	-	-
	21	Monitor mode display 1	Monitor Line-1	0	Frequency	-	Hz
	22	Monitor mode display 2	Monitor Line-2	2	Output Current	-	A
	23	Monitor mode display 3	Monitor Line-3	3	Output Voltage	-	V
	24	Monitor mode initialize	Mon Mode Init	0	No	-	-

Operation State Monitor Setting Details

<table>
<tr><th>Code</th><th>Description</th></tr>
<tr><td>CNF-20 AnyTime Para</td><td>Select items to display on the top-right side of the LCD keypad screen. Choose the parameter settings based on the information to be displayed. Codes CNF-20–23 share the same setting options as listed in the table below.
<table>
<tr><th colspan="2">Setting</th><th>Function</th></tr>
<tr><td>0</td><td>Frequency</td><td>On stop, displays the set frequency. During operation, displays the actual output frequency (Hz).</td></tr>
<tr><td>1</td><td>Speed</td><td>On stop, displays the set speed (rpm). During operation, displays the actual operating speed (rpm).</td></tr>
<tr><td>2</td><td>Output Current</td><td>Displays output current.</td></tr>
<tr><td>3</td><td>Output Voltage</td><td>Displays output voltage.</td></tr>
</table></td></tr>
</table>

Code	Description		
	4	Output Power	Displays output power.
	5	WHour Counter	Displays inverter power consumption.
	6	DCLink Voltage	Displays DC link voltage within the inverter.
	7	DI Status	Displays input terminal status of the terminal block. Starting from the right, displays P1-P8.
	8	DO Status	Displays output terminal status of the terminal block. Starting from the right, Relay1, Relay2, and Q1.
	9	V1 Monitor[V]	Displays the input voltage value at terminal V1 (V).
	10	V1 Monitor[%]	Displays input voltage terminal V1 value as a percentage. If -10V, 0V, +10V is measured, -100%, 0%, 100% will be displayed.
	13	V2 Monitor[V]	Displays input voltage terminal V2 value (V).
	14	V2 Monitor[%]	Displays input voltage terminal V2 value as a percentage.
	15	I2 Monitor[mA]	Displays input current terminal I2 value (A).
	16	I2 Monitor[%]	Displays input current terminal I2 value as a percentage.
	17	PID Output	Displays output of PID controller.
	18	PID Ref Value	Displays reference value of PID controller.
	19	PID Fdb Value	Displays feedback volume of PID controller.
	20	Torque	If the torque reference command mode (DRV-08) is set to a value other than keypad (0 or 1), the torque reference value is displayed.
	21	Torque Limit	If torque limit setting (Cn.53) is set to a value other than keypad (0 or 1), the torque limit value is displayed.
	23	Spd Limit	If the speed limit setting (Cn.62) on torque control mode is set to a value other than keypad (0 or 1), the speed limit setting is displayed.
	24	Load Speed	Displays the speed of a load in the desired scale and unit. Displays the speed of a load that ADV-61 (Load Spd Gain) and ADV-62 (Load Spd Scale) are applied as rpm or mpm set at ADV-63 (Load Spd Unit).
	25	Temperature	Displays the iGBT module's inner temperature in Celsius (℃).
CNF-21–23 Monitor	Select the items to be displayed in monitor mode. Monitor mode is		

Code	Description
Line-x	the first displayed mode when the inverter is powered on. A total of three items, from monitor line-1 to monitor line- 3, can be displayed simultaneously.
CNF-24 Mon Mode Init	Selecting 1(Yes) initializes CNF-20-23.

Load Speed Display Setting

Group	Code	Name	LCD Display	Parameter Setting		Setting Range	Unit
ADV (M2)	61(40)	Rotation count speed gain	Load Spd Gain	-	100.0	1~6000.0 [%]	-
	62(41)	Rotation count speed scale	Load Spd Scale	0	x 1	0~4	Hz
	63(42)	Rotation count speed unit	Load Spd Unit	2	rpm	0~1	A

Load Speed Display Setting Detail

Code	Description
ADV-61(M2-40) Load Spd Gain	If monitoring item 24 Load Speed is selected and if the motor spindle and the load are connected with belt, the actual number of revolutions can be displayed by calculating the pulley ratio.
ADV-62(M2-41) Load Spd Scale	Selects the decimal places that monitoring item 24 Load Speed displays (from x1–x0.0001).
ADV-63(M2-42) Load Spd Unit	Selects the unit of monitoring item 24 Load Speed. Selects between RPM (Revolution Per Minute) and MPM (Meter Per Minute) for the unit. For example, if line speed is 300 [mpm] at 800 [rpm], set ADV61 (Load Spd Gain) to "37.5%" to display the line speed. Also, set ADV62 (Load Sped Scale) to "X 0.1" to display the value to the first decimal point. And set ADV63 (Load Spd Unit) to mpm. Now, the monitoring item 24 Load Speed is displayed on the keypad display as 300.0 mpm instead of 800 rpm.

Note

Inverter power consumption

Values are calculated using voltage and current. Electric power is calculated every second and the results are accumulated. Setting CNF-62 (WH Count Reset) value to 1(Yes) will reset cumulated electric energy consumption. Power consumption is displayed as shown below:

- Less than 1,000 kW: Units are in kW, displayed in 999.9 kW format.

- 1–99 MW: Units are in MW, displayed in 99.99 MWh format.
- 100–999 MW: Units are in MW, displayed in 999.9 MWh format.
- More than 1,000 MW: Units are in MW, displayed in 9,999 MWh format and can be displayed up to 65,535 MW. (Values exceeding 65,535MW will reset the value to 0, and units will return to kW. It will be displayed in 999.9 kW format).

5.38 Operation Time Monitor

Monitors inverter and fan operation time. This function is only available on the LCD loader.

Group	Code	Name	LCD Display	Parameter Setting		Setting Range	Unit
CNF	70	Inverter operation accumulated time	On-time	00000DAY 00:00		-	Day hh:mm
	71	Inverter operation accumulated time	Run-time	00000DAY 00:00		-	Day hh:mm
	72	Inverter operation accumulated time initialization	Time Reset	0	No	0–1	-
	74	Cooling fan operation accumulated time	Fan time	00000DAY 00:00		-	Day hh:mm
	75	Cooling fan operation accumulated time initialization	Fan Time Reset	0	No	0–1	-

Operation Time Monitor Setting Details

Code	Description
CNF-70 On-time	Displays accumulated power supply time. Information is displayed in [Day Hr:Min (00000DAY 00:00)] format.
CNF-71 Run-time	Displays accumulated time of voltage output by operation command input. Information is displayed in [Day Hr:Min (00000DAY 00:00)] format.
CNF-72 Time Reset	Setting 1(Yes) will delete power supply accumulated time (On-time) and operation accumulated time (Run-time) and is displayed as 00000DAY 00:00 format.
CNF-74 Fan time	Displays accumulated time of inverter cooling fan operation. Information will be displayed in [Day Hr:Min (00000DAY 00:00)] format.
CNF-75 Fan Time Reset	Setting 1(Yes) will delete cooling fan operation accumulated time(on-time) and operation accumulated time (Run-time) and will display it in 00000DAY 00:00 format.

6 Learning Protection Features

Protection features provided by the S100 series inverter are categorized into two types: protection from overheating damage to the motor, and protection against the inverter malfunction.

6.1 Motor Protection

6.1.1 Electronic Thermal Motor Overheating Prevention (ETH)

ETH is a protective function that uses the output current of the inverter without a separate temperature sensor, to predict a rise in motor temperature to protect the motor based on its heat characteristics.

Group	Code	Name	LCD Display	Parameter Setting		Setting range	Unit
Pr	40	Electronic thermal prevention fault trip selection	ETH Trip Sel	0	None	0-2	-
	41	Motor cooling fan type	Motor Cooling	0	Self-cool	-	-
	42	Electronic thermal one minute rating	ETH 1min	150		120-200	%
	43	Electronic thermal prevention continuous rating	ETH Cont	120		50-150	%

Electronic Thermal (ETH) Prevention Function Setting Details

<table>
<tr><th>Code</th><th>Description</th></tr>
<tr><td>Pr.40 ETH Trip Sel</td><td>ETH can be selected to provide motor thermal protection. The LCD screen displays “E-Thermal.”
<table>
<tr><th colspan="2">Setting</th><th>Function</th></tr>
<tr><td>0</td><td>None</td><td>The ETH function is not activated.</td></tr>
<tr><td>1</td><td>Free-Run</td><td>The inverter output is blocked. The motor coasts to a halt (free-run).</td></tr>
<tr><td>2</td><td>Dec</td><td>The inverter decelerates the motor to a stop.</td></tr>
</table></td></tr>
<tr><td>Pr.41 Motor Cooling</td><td>Select the drive mode of the cooling fan, attached to the motor.
<table>
<tr><th colspan="2">Setting</th><th>Function</th></tr>
</table></td></tr>
</table>

<table>
<tr><th>Code</th><th>Description</th></tr>
<tr><td></td><td>
<table>
<tr><td>0</td><td>Self-cool</td><td>As the cooling fan is connected to the motor axis, the cooling effect varies, based on motor speed. Most universal induction motors have this design.</td></tr>
<tr><td>1</td><td>Forced-cool</td><td>Additional power is supplied to operate the cooling fan. This provides extended operation at low speeds. Motors designed for inverters typically have this design.</td></tr>
</table>
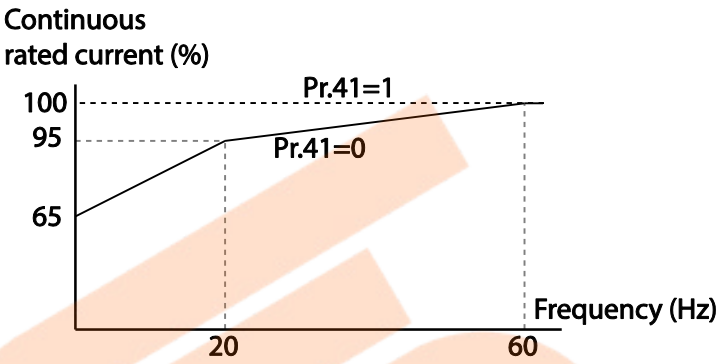

</td></tr>
<tr><td>Pr.42 ETH 1 min</td><td>The amount of input current that can be continuously supplied to the motor for 1 minute, based on the motor-rated current (bA.13).</td></tr>
<tr><td>Pr.43 ETH Cont</td><td>Sets the amount of current with the ETH function activated. The range below details the set values that can be used during continuous operation without the protection function.
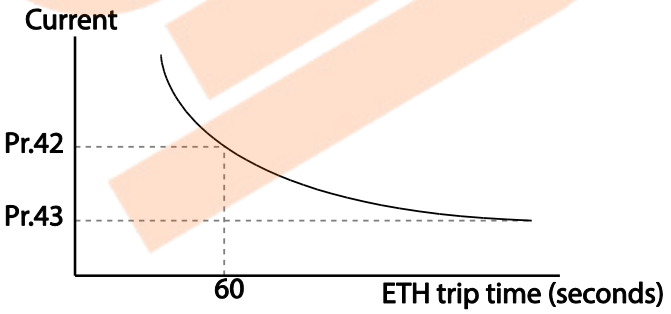

</td></tr>
</table>

6.1.2 Motor Overheat Sensor Input

If the motor overheats, you can use the protection function by connecting Anti-overheating temperature sensor attached to the motor and analog input terminal on the VFD's terminal block.

Group	Code	Name	LCD Display	Parameter Setting		Setting Range	Unit
Pr	34	Motion selection after detecting by the motor overheat detection sensor	Thermal-T Sel	0	None	0~2	
	35	Motor overheat detection sensor input selection	Thermal In Src	0	None	0~3	
	36	Motor overheat detection sensor fault level	Thermal-T Lev	50.0		0.0~100.0	%
	37	Motor overheat detection sensor fault area	Thermal-T Area	0	Low	0~1	
OU	01	Analog output1	AO1 Mode	15	Constant	0~15	
	05	Analog constant output1	AO1 Const %	0.0		0.0~100.0	%

Motor Overheat Sensor Input setting details

<table>
<tr><th>Code</th><th>Description</th></tr>
<tr><td>Pr.34 Thermal-T Sel</td><td>If the motor overheats, set the Inverter operation states.
<table>
<tr><th colspan="2">Setting</th><th>Function</th></tr>
<tr><td>0</td><td>None</td><td>The Thermal-T Sel function is not activated.</td></tr>
<tr><td>1</td><td>Free-Run</td><td>If the motor overheats, the inverter blocks output. The motor performs in free-run condition.</td></tr>
<tr><td>2</td><td>Dec</td><td>If the motor overheats, the motor decelerates to a stop.</td></tr>
</table></td></tr>
<tr><td>Pr.35 Thermal In Src</td><td>If you connect the motor overheat sensor to the voltage input terminal (V1, V2) of the Inverter terminal block, choose the type of the terminal.
<table>
<tr><th colspan="2">Setting</th><th>Function</th></tr>
<tr><td>0</td><td>None</td><td>No connection with the motor overheat sensor.</td></tr>
<tr><td>1</td><td>V1</td><td>Sets the connection of the motor overheat sensor to the V1 terminal.</td></tr>
<tr><td>3</td><td>V2</td><td>Sets the connection of the motor overheat sensor to the V2 terminal.</td></tr>
</table></td></tr>
<tr><td>Pr.36 Thermal-T Lev</td><td>Sets the motor overheat detection sensor fault level.</td></tr>
</table>

<table>
<tr><th>Code</th><th>Description</th></tr>
<tr><td>Pr.37 Thermal-T Area</td><td>Sets the motor overheat fault level that defines whether the protection function works or not.
<table>
<tr><th colspan="2">Setiing</th><th>Function</th></tr>
<tr><td>0</td><td>Low</td><td>If the motor overheat sensor input is lower than Pr.36 than it works.</td></tr>
<tr><td>1</td><td>High</td><td>If the motor overheat sensor input is higher than Pr.36 than it works.</td></tr>
</table></td></tr>
<tr><td>OU.01 AO1 Mode
OU.05 AO1 Const %</td><td>It is used when a constant current is supplied to the temperature sensor using analog output terminal to receive input through the V1 and V2 terminals.</td></tr>
</table>

In case of using the temperature sensor such as a PTC using an analog output terminal.

It is measured by supplying a constant current to the temperature sensor through the analog current output terminal (AO1) and converting it into a voltage according to the change in resistance value of the PTC. To use the analog output terminal as a current source, the SW3 must be located in the IO display. If the V2 terminal is used as the input terminal of the sensor, the switch2 (SW2) on the I/O board must be located on the V2 mark. If the V1 terminal is used, you can use it regardless of the switch display.

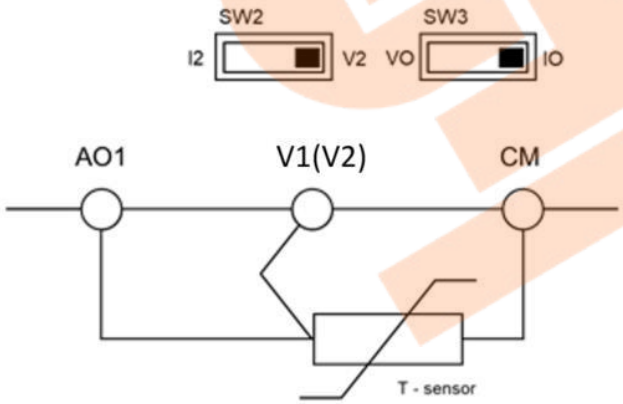

AO1 terminal use

(Recommended T-sensor resistance range : 0 ~ 500ohm)

In case of using the termperature sensor such as the PTC using a TI terminal.

If the resistance range of temperature sensors, such as PTC, is greater than several kohms, TI terminals are recommended to be used instead of analog input terminals (AO1). Using the power and resistance inside the TI terminal, measure the voltage divided according to the change in the resistance value of the PTC. Switch 2 (SW2) on the I/O

boarde must be located on the V2 mark if the V2 terminal is used. If you use the V1 terminal, you can use it regardless of the switch display.

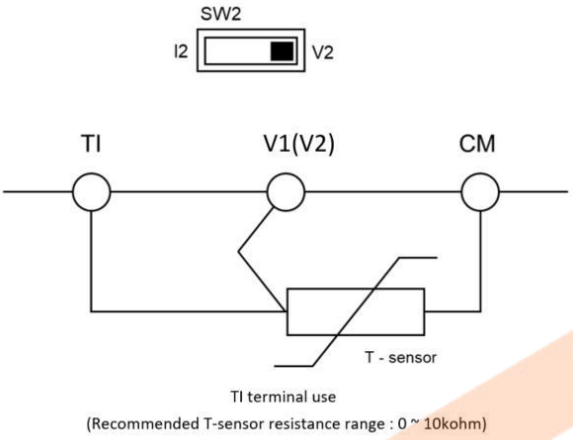

6.1.3 Overload Early Warning and Trip

A warning or fault 'trip' (cutoff) occurs when the motor reaches an overload state, based on the motor's rated current. The amount of current for warnings and trips can be set separately.

Group	Code	Name	LCD Display	Parameter Setting		Setting range	Unit
Pr	04	Load level setting	Load Duty	1	Heavy Duty	-	-
	17	Overload warning selection	OL Warn Select	1	Yes	0-1	-
	18	Overload warning level	OL Warn Level	150		30-180	%
	19	Overload warning time	OL Warn Time	10.0		0-30	s
	20	Motion at overload trip	OL Trip Select	1	Free-Run	-	-
	21	Overload trip level	OL Trip Level	180		30-200	%
	22	Overload trip time	OL Trip Time	60.0		0-60.0	s
OU	31	Multi-function relay 1 item	Relay 1	5	Over Load	-	-
	33	Multi-function output 1 item	Q1 Define				

Overload Early Warning and Trip Setting Details

Code	Description
Pr.04 Load Duty	Select the load level.

<table>
<tr><th>Code</th><th>Description</th></tr>
<tr><td></td><td>
<table>
<tr><th colspan="2">Setting</th><th>Function</th></tr>
<tr><td>0</td><td>Normal Duty</td><td>Used in underloads, like fans and pumps (overload tolerance: 120% of rated underload current for 1 minute). IP66 models do not support normal duty operation.</td></tr>
<tr><td>1</td><td>Heavy Duty</td><td>Used in heavy loads, like hoists, cranes, and parking devices (overload tolerance: 150% of rated heavy load current for 1 minute).</td></tr>
</table>
</td></tr>
<tr><td>Pr.17 OL Warn Select</td><td>If the overload reaches the warning level, the terminal block multi-function output terminal and relay are used to output a warning signal. If 1 (Yes) is selected, it will operate. If 0 (No) is selected, it will not operate.</td></tr>
<tr><td>Pr.18 OL Warn Level,
Pr.19 OL Warn Time</td><td>When the input current to the motor is greater than the overload warning level (OL Warn Level) and continues at that level during the overload warning time (OL Warn Time), the multi-function output (Relay 1, Q1) sends a warning signal. When Over Load is selected at OU.31 and 33, the multi-function output terminal or relay outputs a signal. The the signal output does not block the inverter output.</td></tr>
<tr><td>Pr.20 OL Trip Select</td><td>Select the inverter protective action in the event of an overload fault trip.
<table>
<tr><th colspan="2">Setting</th><th>Function</th></tr>
<tr><td>0</td><td>None</td><td>No protective action is taken.</td></tr>
<tr><td>1</td><td>Free-Run</td><td>In the event of an overload fault, inverter output is blocked and the motor will free-run due to inertia.</td></tr>
<tr><td>3</td><td>Dec</td><td>If a fault trip occurs, the motor decelerates and stops.</td></tr>
</table>
</td></tr>
<tr><td>Pr.21 OL Trip Level,
Pr.22 OL Trip Time</td><td>When the current supplied to the motor is greater than the preset value at the overload trip level (OL Trip Level) and continues to be supplied during the overload trip time (OL Trip Time), the inverter output is either blocked according to the preset mode from Pr. 17 or slows to a stop after deceleration.</td></tr>
</table>

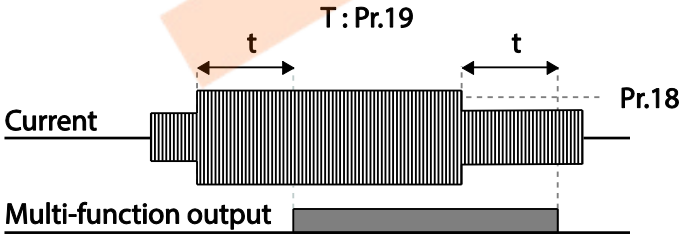

Note

Overload warnings warn of an overload before an overload fault trip occurs. The overload warning signal may not work in an overload fault trip situation, if the overload warn level (OL Warn Level) and the overload warn time (OL Warn Time) are set higher than the overload trip level (OL Trip Level) and overload trip time (OL Trip Time).

6.1.4 Stall Prevention and Flux Braking

The stall prevention function is a protective function that prevents motor stall caused by overloads. If a motor stall occurs due to an overload, the inverter operation frequency is adjusted automatically. When stall is caused by overload, high currents are induced in the motor may cause motor overheat or damage the motor and interrupt operation of the motor-driven devices.

To protect the motor from overload faults, the inverter output frequency is adjusted automatically, based on the size of load.

Group	Code	Name	LCD Display	Parameter Setting		Setting range	Unit
Pr	50	Stall prevention and flux braking	Stall Prevent	0 0000*		-	bit
	51	Stall frequency 1	Stall Freq 1	60.00		Start frequency–Stall Freq 1	Hz
	52	Stall level 1	Stall Level 1	180		30-250	%
	53	Stall frequency 2	Stall Freq 2	60.00		Stall Freq 1–Stall Freq 3	Hz
	54	Stall level 2	Stall Level 2	180		30-250	%
	55	Stall frequency 3	Stall Freq 3	60.00		Stall Freq 2–Stall Freq 4	Hz
	56	Stall level 3	Stall Level 3	180		30-250	%
	57	Stall frequency 4	Stall Freq 4	60.00		Stall Freq 3–Maximum frequency	Hz
	58	Stall level 4	Stall Level 4	180		30-250	%
OU	31	Multi-function relay 1 item	Relay 1	9	Stall	-	-
	32**	Multi-function relay 2 item	Relay 2				
	33	Multi-function output 1 item	Q1 Define				

* The value is displayed on the keypad as 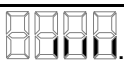.
** Available for 30-75kW models only.

Stall Prevention Function and Flux Braking Setting Details

Code	Description
Pr.50 Stall Prevent	Stall prevention can be configured for acceleration, deceleration, or while operating a motor at constant speed. When the top LCD segment is on, the

Code	Description

corresponding bit is set. When the bottom LCD segment is on, the corresponding bit is off.

Item	Bit Status (On)	Bit Status (Off)
Keypad		
LCD keypad		

Setting					Function
Bit 5	Bit 4	Bit 3	Bit 2	Bit 1	
				✓	Stall protection during acceleration
			✓		Stall protection while operating at a constant speed
		✓			Stall protection during deceleration
	✓				Flux braking during deceleration
✓					Stall protection mode 2

Setting		Function
0 0001	Stall protection during acceleration (Mode 1)	If the inverter output current exceeds the preset stall level (Pr. 52, 54, 56, 58) during acceleration, the motor stops accelerating and starts decelerating. If the current level stays above the stall level, the motor decelerates to the start frequency (dr.19). If the current level causes deceleration below the preset level while operating the stall protection function, the motor resumes acceleration.
1 0001	Stall protection during acceleration (Mode 2)	If the inverter output current exceeds the preset stall level (Pr. 52, 54, 56, 58) during acceleration, the motor adjusts the output frequency. When the output current exceeds the preset stall level, the output frequency is adjusted according to the current through PI control. If the current level causes deceleration below the unlock level while operating the stall protection function, the motor resumes acceleration.
0 0010	Stall protection while operating at a constant speed (Mode 1)	Similar to stall protection during acceleration (Mode 1), the motor starts decelerating and lowers the output frequency automatically when the current level exceeds the preset stall level while operating at a constant speed. If the load current decreases below the unlock level, the motor resumes acceleration.

Code	Description		
	1 0010	Stall protection while operating at a constant speed (Mode 2)	Similar to stall protection during acceleration (Mode 2), the motor adjusts the output frequency according to load current amount when the current level exceeds the preset stall level while operating at a constant speed. If the load current decreases below the unlock level, the motor resumes acceleration.
	# 0100	Stall protection during deceleration	The inverter decelerates and keeps the DC link voltage below a certain level to prevent an over-voltage fault trip during deceleration. As a result, deceleration times may be longer than the set time depending on the load.
	# 1000	Flux braking during deceleration	When using flux braking, the deceleration time may be reduced because regenerative energy is expended at the motor.
	# 1100	Stall protection and flux braking during deceleration	Stall protection and flux braking operate together during deceleration to achieve the shortest and most stable deceleration performance.
	* The "#" mark includes both 0 and 1 selection.		

Code	Description
	Stall protection during acceleration or constant speed operation (Mode 1) 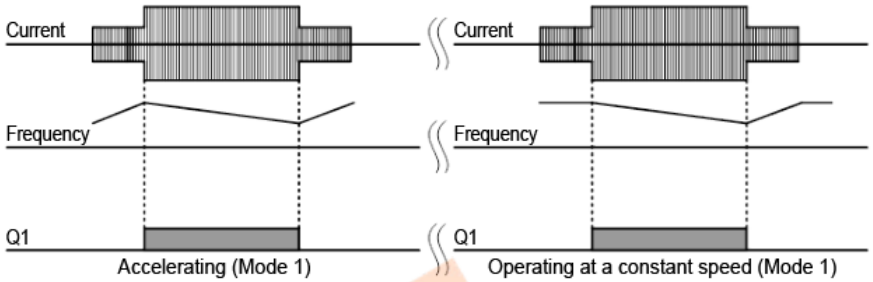 **Mode 1: Decrease to the start frequency according to the stall level** **Stall protection during acceleration or constant speed operation (Mode 2)** 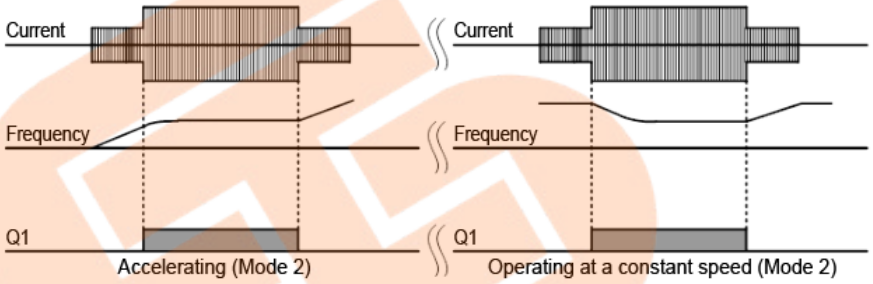 **Mode 2: Frequency adjustment according to the stall level and load current amount** 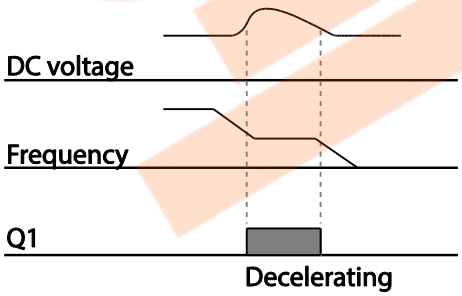
Pr.51 Stall Freq 1- Pr.58 Stall Level 4	Additional stall protection levels can be configured for different frequencies, based on the load type. As shown in the graph below, the stall level can be set above the base frequency. The lower and upper limits are set using numbers that correspond in ascending order. For example, the range for Stall Frequency 2 (Stall Freq 2) becomes the lower limit for Stall Frequency 1 (Stall Freq 1) and the upper limit for Stall Frequency 3 (Stall Freq 3).

Code	Description
	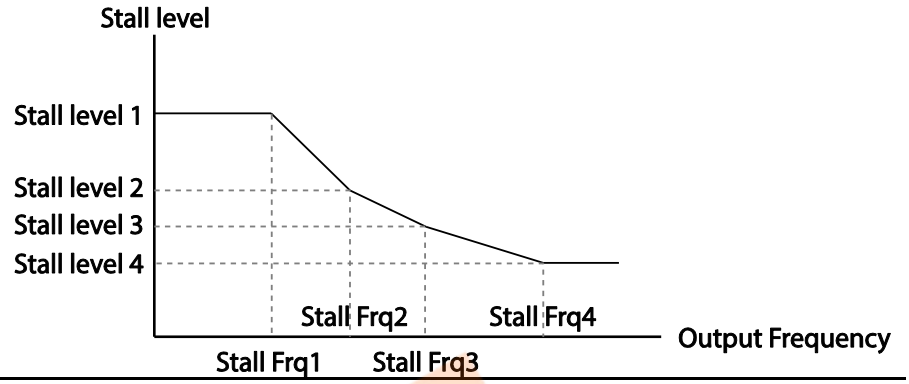

Note

Stall protection and flux braking operate together only during deceleration. Turn on the third and fourth bits of Pr.50 (Stall Prevention) to achieve the shortest and most stable deceleration performance without triggering an overvoltage fault trip for loads with high inertia and short deceleration times. Do not use this function when frequent deceleration of the load is required, as the motor can overheat and may be damaged easily.
When you operating Brake resistor, the motor may vibrate under the Flux braking operation. In this case, please turn off the Flux braking(Pr.50).

Caution

- Use caution when decelerating while using stall protection as depending on the load, the deceleration time can take longer than the time set. Acceleration stops when stall protection operates during acceleration. This may make the actual acceleration time longer than the preset acceleration time.
- When the motor is operating, Stall Level 1 applies and determines the operation of stall protection.

6.2 Inverter and Sequence Protection

6.2.1 Open-phase Protection

Open-phase protection is used to prevent overcurrent levels induced at the inverter inputs due to an open-phase within the input power supply. Open-phase output protection is also available. An open-phase at the connection between the motor and the inverter output may cause the motor to stall, due to a lack of torque.

Group	Code	Name	LCD Display	Parameter Setting	Setting range	Unit
Pr	05	Input/output open-phase protection	Phase Loss Chk	00*	-	bit
	06	Open-phase input voltage band	IPO V Band	40	1-100V	V

* The value is displayed on the keypad as .

Input and Output Open-phase Protection Setting Details

Code	Description
Pr.05 Phase Loss Chk, Pr.06 IPO V Band	When open-phase protection is operating, input and output configurations are displayed differently. When the top LCD segment is On, the corresponding bit is set to On. When the bottom LCD segment is On, the corresponding bit is set to Off.

Item	Bit status (On)	Bit status (Off)
Keypad		
LCD keypad		

Setting		Function
Bit 2	Bit 1	
	✓	Output open-phase protection
✓		Input open-phase protection

6.2.2 External Trip Signal

Set one of the multi-function input terminals to 4 (External Trip) to allow the inverter to stop operation by using external signals.

Group	Code	Name	LCD Display	Parameter Setting		Setting range	Unit
In	65-71	Px terminal setting options	Px Define (Px: P1-P7)	4	External Trip	-	-
	87	Multi-function input contact selction	DI NC/NO Sel	0000000		-	bit

External Trip Signal Setting Details

Code	Description
In.87 DI NC/NO Sel	Selects the type of input contact. If the mark of the switch is at the bottom (0), it operates as an A contact (Normally Open). If the mark is at the top (1), it operates as a B contact (Normally Closed).

Item	Bit On	Bit Off
Keypad		
LCD loader		

The corresponding terminals for each bit are as follows:

Bit	11	10	9	8	7	6	5	4	3	2	1
Terminal					P7	P6	P5	P4	P3	P2	P1

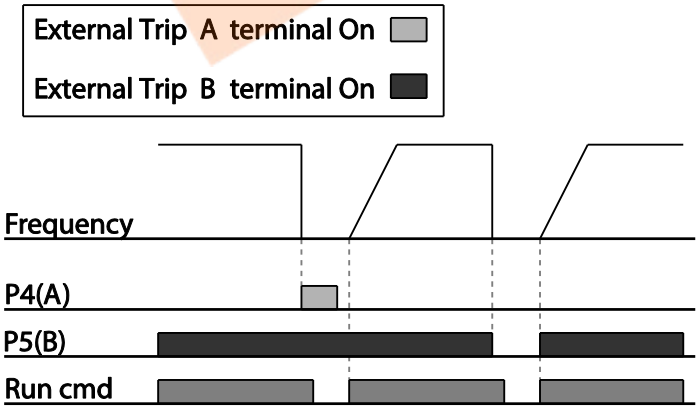

6.2.3 Inverter Overload Protection

When the inverter input current exceeds the rated current, a protective function is activated to prevent damages to the inverter based on inverse proportional characteristics.

Group	Code	Name	LCD Display	Parameter Setting		Setting range	Unit
OU	31	Multi-function relay 1	Relay 1	6	IOL	-	-
	32*	Multi-function relay 2	Relay 2				
	33	Multi-function output 1	Q1 Define				

* Available for 30-75kW models only.

Note

A warning signal output can be provided in advance by the multi-function output terminal before the inverter overload protection function (IOLT) operates. When the overcurrent time reaches 60% of the allowed overcurrent (150%, 1 min), a warning signal output is provided (signal output at 150%, 36sec).

6.2.4 Speed Command Loss

When setting operation speed using an analog input at the terminal block, communication options, or the keypad, speed command loss setting can be used to select the inverter operation for situations when the speed command is lost due to the disconnection of signal cables.

Group	Code	Name	LCD Display	Parameter Setting		Setting range	Unit
Pr	12	Speed command loss operation mode	Lost Cmd Mode	1	Free-Run	-	-
	13	Time to determine speed command loss	Lost Cmd Time	1.0		0.1-120	s
	14	Operation frequency at speed command loss	Lost Preset F	0.00		Start frequency–Max. frequency	Hz
	15	Analog input loss decision level	AI Lost Level	0	Half of x1		-
OU	31	Multi-function Relay 1	Relay 1	13	Lost Command	-	-
	32*	Multi-function Relay 2	Relay 2				
	33	Multi-function output 1	Q1 Define				

* Available for 30-75kW models only.

Speed Command Loss Setting Details

<table>
<tr><th>Code</th><th>Description</th></tr>
<tr><td>Pr.12 Lost Cmd Mode</td><td>In situations when speed commands are lost, the inverter can be configured to operate in a specific mode:
<table>
<tr><th colspan="2">Setting</th><th>Function</th></tr>
<tr><td>0</td><td>None</td><td>The speed command immediately becomes the operation frequency without any protection function.</td></tr>
<tr><td>1</td><td>Free-Run</td><td>The inverter blocks output. The motor performs in free-run condition.</td></tr>
<tr><td>2</td><td>Dec</td><td>The motor decelerates and then stops at the time set at Pr.07 (Trip Dec Time).</td></tr>
<tr><td>3</td><td>Hold Input</td><td>The inverter calculates the average input value for 10 seconds before the loss of the speed command and uses it as the speed reference.</td></tr>
<tr><td>4</td><td>Hold Output</td><td>The inverter calculates the average output value for 10 seconds before the loss of the speed command and uses it as the speed reference.</td></tr>
<tr><td>5</td><td>Lost Preset</td><td>The inverter operates at the frequency set at Pr. 14 (Lost Preset F).</td></tr>
</table></td></tr>
<tr><td>Pr.15 AI Lost Level, Pr.13 Lst Cmd Time</td><td>Configure the voltage and decision time for speed command loss when using analog input.
<table>
<tr><th colspan="2">Setting</th><th>Function</th></tr>
<tr><td>0</td><td>Half of x1</td><td>Based on the values set at In.08 and In.12, protective operation starts when the input signal is reduced to half of the initial value of the analog input set using the speed command (Frq code of Operation group) and it continues for the time (speed loss decision time) set at Pr. 13 (Lost Cmd Time). For example, set the speed command to 2 (V1) at the Frq code in the Operation group, and In.06 (V1 Polarity) to 0 (Unipolar). When the voltage input drops to less than half of the value set at In.08 (V1 Volt x 1), the protective function is activated.</td></tr>
<tr><td>1</td><td>Below x1</td><td>The protective operation starts when the signal becomes smaller than the initial value of the analog input set by the speed command and it continues for the speed loss decision time set at Pr.13 (Lost Cmd Time). Codes In.08 and In.12 are used to set the standard values.</td></tr>
</table></td></tr>
<tr><td>Pr.14 Lost Preset F</td><td>In situations where speed commands are lost, set the operation mode (Pr.12 Lost Cmd Mode) to 5 (Lost Preset). This operates the protection function and sets the frequency so that the operation can continue.</td></tr>
</table>

Set Pr.15 (AI Lost Level) to 1 (Below x 1), Pr.12 (Lost Cmd Mode) to 2 (Dec), and Pr.13 (Lost Cmd Time) to 5 sec. Then it operates as follows:

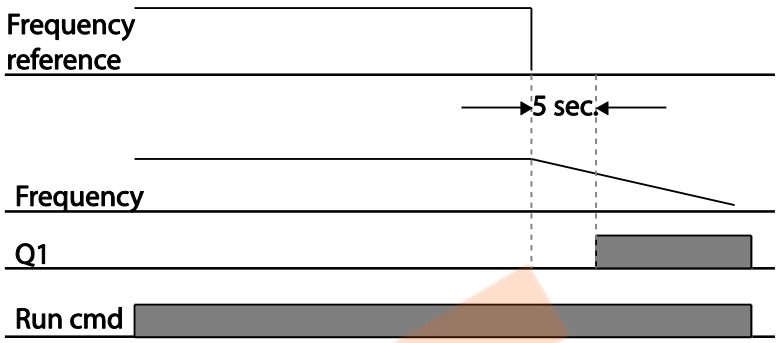

Note

If speed command is lost while using communication options or the integrated RS-485 communication, the protection function operates after the command loss decision time set at Pr.13 (Lost Cmd Time) is passed.

6.2.5 Dynamic Brake (DB) Resistor Configuration

For S100 series, the brake resistor circuit is integrated inside the inverter.

Group	Code	Name	LCD Display	Parameter Setting		Setting range	Unit
Pr	66	Brake resistor configuration	DB Warn %ED	10		0-30	%
OU	31	Multi-function relay 1 item	Relay 1	31	DB Warn %ED	-	-
	32*	Multi-function relay 2 item	Relay 2				
	33	Multi-function output 1 item	Q1 Define				

* Available for 30-75kW models only.

Dynamic Brake Resistor Setting Details

Code	Description
Pr.66 DB Warn %ED	Set brake resistor configuration (%ED: Duty cycle). Brake resistor configuration sets the rate at which the brake resistor operates for one operation cycle. The maximum time for continuous braking is 15 sec and the brake resistor signal is not output from the inverter after the 15 sec period has expired. An example of brake resistor set up is as follows:

Code	Description
	$$\%ED = \frac{T_dec}{T_acc + T_steady + T_dec + T_stop} \times 100\%$$ 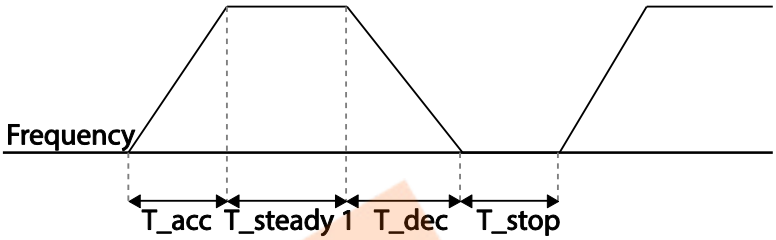 [Example 1] $$\%ED = \frac{T_dec}{T_dec + T_steady1 + T_acc + T_steady2} \times 100\%$$ 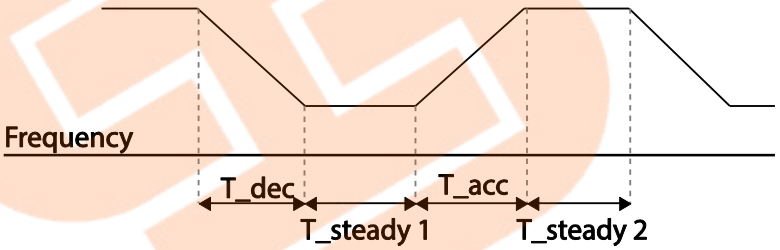 [Example 2] • T_acc: Acceleration time to set frequency • T_steady: Constant speed operation time at set frequency • T_dec: Deceleration time to a frequency lower than constant speed operation or the stop time from constant speed operation frequency • T_stop: Stop time until operation resumes

Caution

Do not set the brake resistor to exceed the resistor's power rating. If overloaded, it can overheat and cause a fire. When using a resistor with a heat sensor, the sensor output can be used as an external trip signal for the inverter's multi-function input.

6.3 Under load Fault Trip and Warning

Group	Code	Name	LCD Display	Parameter Setting		Setting range	Unit
Pr	04*	Load level selection	Load Duty	0	Normal Duty	-	
	25	Under load warning selection	UL Warn Sel	1	Yes	0-1	-
	26	Under load warning time	UL Warn Time	10.0		0-600	sec
	27	Under load trip selection	UL Trip Sel	1	Free-Run	-	-
	28	Under load trip timer	UL Trip Time	30.0		0-600	sec
	29	Under load upper limit level	UL LF Level	30		10-100	%
	30	Under load lower limit level	UL BF Level	30		10-100	%

* IP66 models do not support normal duty operation.

Under Load Trip and Warning Setting Details

Code	Description
Pr.27 UL Trip Sel	Sets the underload fault trip occurs. If set to 0(None), does not detect the underload fault trip. If set to 1 (Free-Run), the output is blocked in an underload fault trip situation. If set to 2 (Dec), the motor decelerates and stops when an underload trip occurs.
Pr.25 UL Warn Sel	Sets the underload warning options. Set to 1(Yes) and set the multi-function output terminals (at OU-31 and 33) to 7 (Underload). The warning signals are output when an underload condition arises.
Pr.26 UL Warn Time, Pr.28 UL Trip Time	The protection function operates when the underload level condition explained above is maintained for a set warning time or fault trip time. This function does not operate if energy-saving operation is activated at Ad-50 (E-Save Mode).
Pr.29 UL LF Level, Pr.30 UL BF Level	• Setting Heavy Duty - Do not support Pr.29. - At Pr.30, the underload level is decided based on the motor's rated current. 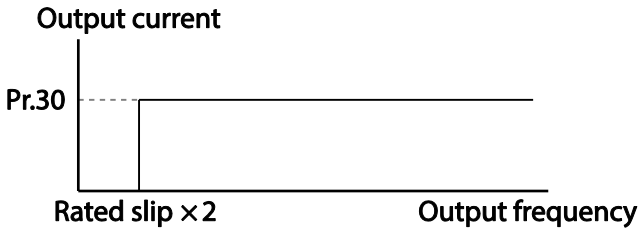 • Setting Normal Duty

Code	Description
	- At Pr.29, the under load rate is decided based on twice the operation frequency of the motor's rated slip speed (bA.12 Rated Slip). - At Pr.30, the under load rate is decided based on the base frequency set at dr.18 (Base Freq).An upper limit and lower limit is based on the inverter's rated current. 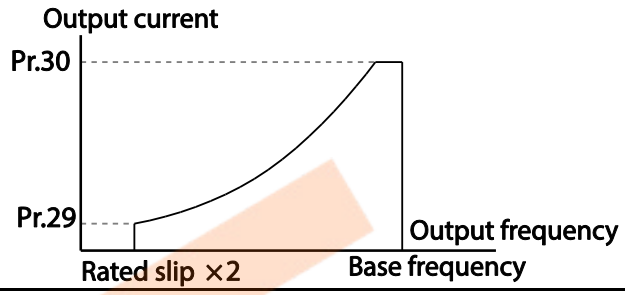

6.3.1 Fan Fault Detection

Group	Code	Name	LCD Display	Parameter Setting		Setting range	Unit
Pr	79	Cooling fan fault selection	FAN Trip Mode	0		Trip	
OU	31	Multi-function relay 1	Relay 1	8	FAN Warning		-
	32*	Multi-function relay 2	Relay 2				
	33	Multi-function output 1	Q1 Define				

* Available for 30-75kW models only.

Fan Fault Detection Setting Details

Code	Description
Pr.79 FAN Trip Mode	Set the cooling fan fault mode. Setting: 0 Trip — The inverter output is blocked and the fan trip is displayed when a cooling fan error is detected. Setting: 1 Warning — When OU.33 (Q1 Define) and OU.31 (Relay1) are set to 8 (FAN Warning), the fan error signal is output and the operation continues.
OU.31 Relay1, OU.32 Relay2, OU.33 Q1 Define	When the code value is set to 8 (FAN Warning), the fan error signal is output and operation continues. However, when the inverter inside temperature rises above a certain level, output is blocked due to activation of overheat protection.

6.3.2 Lifetime diagnosis of components

Lifetime diagnosis for fans

Enter the Pr-87(Fan exchange warning level) code (%). After the selected usage (%) is reached (out of 50,000 hours), the fan exchange warning message will appear in the multi-functional output or keypad.

The total fan usage level (%) appears at Pr-86. When exchanging fans, you may initialize the accumulated value to 0 by setting the CNF-75 (Initializing accumulated time for cooling fans) to 1.

Group	Code	Name	LCD Display	Setting value		Setting	Unit
Pr	86	Accumulated percentof fan usage	FAN Time Perc	0.0		0.0-6553.5	%
	87	Fan exchange warning Level	FAN Exchange level	90.0		0.0-100.0	%
	88*	Initialize operation time of cooling fans	FAN Time Rst	0	No	-	-
				1	Yes		
CNF	75**	Initialize operation time of cooling fans	FAN Time Rst	0	No	-	-
				1	Yes		
OU	31	Multi-function relay 1	Relay 1	37	FAN Exchange		-
	32	Multi-function relay 2	Relay 2				
	33	Multi-function output 1	Q1 Define				

* Available on keypad only.
** Available on LCD loader only.

6.3.3 Low Voltage Fault Trip

When inverter input power is lost and the internal DC link voltage drops below a certain voltage level, the inverter stops output and a low voltage trip occurs.

Group	Code	Name	LCD Display	Parameter Setting		Setting range	Unit
Pr	81	Low voltage trip decision delay time	LVT Delay	0.0		0-60	sec
OU	31	Multi-function relay 1	Relay 1	11	Low Voltage		-
	32*	Multi-function relay 2	Relay 2				
	33	Multi-function output 1	Q1 Define				

* Available for 30-75kW models only.

Low Voltage Fault Trip Setting Details

Code	Description
Pr.81 LVT Delay	If the multi-functional relay or terminal output is set to 11 (Low Voltage), a low voltage trip condition arises. The relay or terminal output is on after the trip delay time (Pr.81: LVT Delay).

6.3.4 Output Block by Multi-Function Terminal

When the multi-function input terminal is set as the output block signal terminal and the signal is input to the terminal, then the operation stops.

Group	Code	Name	LCD Display	Parameter Setting		Setting range	Unit
In	65-71	Px terminal setting options	Px Define(Px: P1-P7)	5	BX	-	-

Output Block by Multi-Function Terminal Setting Details

Code	Description
In.65-71 Px Define	When the operation of the multi-function input terminal is set to 5 (BX) and is turned on during operation, the inverter blocks the output and 'BX' is displayed on the keypad display. While 'BX' is displayed on the keypad screen, the inverter's operation information including the operation frequency and current at the time of BX signal can be monitored. The inverter resumes operation when the BX terminal turns off and operation command is input.

6.3.5 Trip Status Reset

Restart the inverter using the keypad or analog input terminal, to reset the trip status.

Group	Code	Name	LCD Display	Parameter Setting		Setting range	Unit
In	65-71	Px terminal setting options	Px Define(Px: P1-P7)	3	RST	-	-

Trip Status Reset Setting Details

Code	Description
In.65-71 Px Define	Press [Stop/Reset] key on the keypad or use the multi-function input

Code	Description
	terminal to restart the inverter. Set the multi-function input terminal to 3 (RST) and turn on the terminal to reset the trip status.

6.3.6 Inverter Diagnosis State

Check the diagnosis of components or devices for inverter to check if they need to be replaced.

Group	Code	Name	LCD Display	Parameter Setting	Setting Range		Unit
Pr	89	FAN replacement warning	Inverter State	00	Bit	00-10	Bit
					00	-	
					01	FAN Exchange	

6.3.7 Operation Mode on Option Card Trip

Option card trips may occur when an option card is used with the inverter. Set the operation mode for the inverter when a communication error occurs between the option card and the inverter body, or when the option card is detached during operation.

Group	Code	Name	LCD Display	Parameter Setting		Setting range	Unit
Pr	80	Operation mode on option card trip	Opt Trip Mode	0	None	0-3	-
				1	Free-Run		
				2	Dec		

Operation Mode on Option Trip Setting Details

Code	Description		
Pr.80 Opt Trip Mode	Setting		Function
	0	None	No operation
	1	Free-Run	The inverter output is blocked and fault trip information is shown on the keypad.
	2	Dec	The motor decelerates to the value set at Pr.07 (Trip Dec Time).

6.3.8 No Motor Trip

If an operation command is run when the motor is disconnected from the inverter output terminal, a 'no motor trip' occurs and a protective operation is performed by the system.

Group	Code	Name	LCD Display	Parameter Setting		Setting range	Unit
Pr	31	Operation on no motor trip	No Motor Trip	0	None	-	-
	32	No motor trip current level	No Motor Level	5		1-100	%
	33	No motor detection time	No Motor Time	3.0		0.1-10	s

No Motor Trip Setting Details

Code	Description
Pr.32 No Motor Level, Pr.33 No Motor Time	If the output current value [based on the rated current (bA.13)] is lower than the value set at Pr.32 (No Motor Level), and if this continues for the time set at Pr.33 (No Motor Time), a 'no motor trip' occurs.

Caution

If bA.07 (V/F Pattern) is set to 1 (Square), set Pr.32 (No Motor Level) to a value lower than the factory default. Otherwise, 'no motor trip' due to a lack of output current will result when the 'no motor trip' operation is set.

6.3.9 Low voltage trip 2

If you set the Pr-82 (LV2 Selection) code to 01, the trip notification is displayed when a low voltage trip occurs. In this case, even if the voltage of the DC Link condenser is higher than the trip level, the LV2 trip will not be retrieved. To retrieve the trip, reset the inverter. The trip history will not be saved. LV2 and trip history can be saved in the LV2 Selection setting.

Group	Code	Name	LCD Display	Parameter Setting	Setting Range	Unit
Pr	82	LV2 Selection	LV2 Enable		0-3	Bit

Low Voltage Trip 2 Setting Details

Code	Description
Pr.82 LV2 Enable	Select to activate LV2 Enable fault notification mode.

Bit setting	Function
	Low Voltage 2 Trip is not selected. (Only Low Voltage Trip can operate.)
	Low Voltage 2 Trip can operate. The fault history is not saved.
	Low Voltage 2 Trip is not selected. (Only Low Voltage Trip can operate.)
	Low Voltage 2 Trip can operate. The fault history is saved.

6.4 Fault/Warning List

The following list shows the types of faults and warnings that can occur while using the S100 inverter. Please refer to *6 Learning Protection Features* on page *252* for details about faults and warnings.

Category		LCD Display	Details
Major fault	Latch type	Over Current1	Over current trip
		Over Voltage	Over voltage trip
		External Trip	Trip due to an external signal
		NTC Open	Temperature sensor fault trip
		Over Current2	ARM short current fault trip
		Option Trip-x*	Option fault trip*
		Over Heat	Over heat fault trip
		Out Phase Open	Output open-phase fault trip
		In Phase Open	Input open-phase fault trip
		Inverter OLT	Inverter overload fault trip
		Ground Trip	Ground fault trip
		Fan Trip	Fan fault trip
		E-Thermal	Motor overheat fault trip
		Pre-PID Fail	Pre-PID operation failure

Category		LCD Display	Details
		IO Board Trip	IO Board connection fault trip
		Ext-Brake	External brake fault trip
		No Motor Trip	No motor fault trip
		Low Voltage 2	Low voltage fault trip during operation
		ParaWrite Trip**	Write parameter fault trip
		Safety A(B) Err	Safety A(B) contact trip
	Level type	Low Voltage	Low voltage fault trip
		BX	Emergency stop fault trip
		Lost Command	Command loss trip
	Hardware damage	EEP Err	External memory error
		ADC Off Set	Analog input error
		Watch Dog-1	CPU Watch Dog fault trip
		Watch Dog-2	
Minor fault		Over Load	Motor overload fault trip
		Under Load	Motor underload fault trip
Warning		Lost Command	Command loss fault trip warning
		Over Load	Overload warning
		Under Load	Under load warning
		Inverter OLT	Inverter overload warning
		Fan Warning	Fan operation warning
		DB Warn %ED	Brake resistor braking rate warning
		Retry Tr Tune	Rotor time constant tuning error
		FAN Exchange	Fan replacement warning

* Applies only when an option board is used.
** Displayed on an LCD keypad only.

7 RS-485 Communication Features

This section in the user manual explains how to control the inverter with a PLC or a computer over a long distance using the RS-485 communication features. To use the RS-485 communication features, connect the communication cables and set the communication parameters on the inverter. Refer to the communication protocols and parameters to configure and use the RS-485 communication features.

7.1 Communication Standards

Following the RS-485 communication standards, S100 products exchange data with a PLC and computer. The RS-485 communication standards support the Multi-drop Link System and offer an interface that is strongly resistant to noise. Please refer to the following table for details about the communication standards.

Item	Standard
Communication method/ Transmission type	RS-485/Bus type, Multi-drop Link System
Inverter type name	S100
Number of connected inverters/ Transmission distance	Maximum of 16 inverters / Maximum1,200m (recommended distance: within 700m)
Recommended cable size	0.75mm², (18AWG), Shielded Type Twisted-Pair (STP) Wire
Installation type	Dedicated terminals (S+/S-/SG) on the control terminal block
Power supply	Supplied by the inverter - insulated power source from the inverter's internal circuit
Communication speed	1,200/2,400/9,600/19,200/38,400/57,600/115,200 bps
Control procedure	Asynchronous communications system
Communication system	Half duplex system
Character system	Modbus-RTU: Binary / LS Bus: ASCII
Stop bit length	1-bit/2-bit
Frame error check	2 bytes
Parity check	None/Even/Odd

7.2 Communication System Configuration

In an RS-485 communication system, the PLC or computer is the master device and the inverter is the slave device. When using a computer as the master, the RS-232 converter must be integrated with the computer, so that it can communicate with the inverter through the RS-232/RS-485 converter. Specifications and performance of converters may vary depending on the manufacturer, but the basic functions are identical. Please refer to the converter manufacturer's user manual for details about features and specifications.

Connect the wires and configure the communication parameters on the inverter by referring to the following illustration of the communication system configuration.

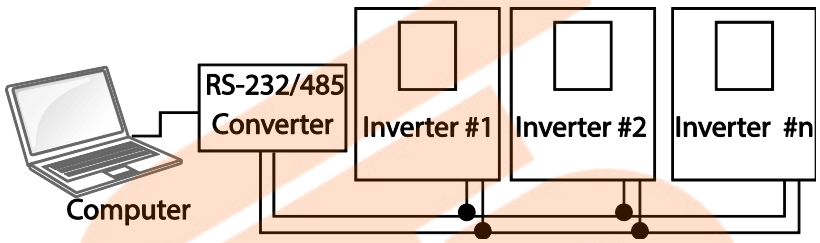

7.2.1 Communication Line Connection

Make sure that the inverter is turned off completely, and then connect the RS-485 communication line to the S+/S-/SG terminals of the terminal block. The maximum number of inverters you can connect is 16. For communication lines, use shielded twisted pair (STP) cables.

The maximum length of the communication line is 1,200 meters, but it is recommended to use no more than 700 meters of communication line to ensure stable communication. Please use a repeater to enhance the communication speed when using a communication line longer than 1,200 meters or when using a large number of devices. A repeater is effective when smooth communication is not available due to noise interference.

Caution

When wiring the communication line, make sure that the SG terminals on the PLC and inverter are connected. SG terminals prevent communication errors due to electronic noise interference.

7.2.2 Setting Communication Parameters

Before proceeding with setting communication configurations, make sure that the communication lines are connected properly. Turn on the inverter and set the communication parameters.

Group	Code	Name	LCD Display	Parameter Setting		Setting range	Unit
CM	01	Built-in communication inverter ID	Int485 St ID	1		1-250	-
	02	Built-in communication protocol	Int485 Proto	0	ModBus RTU	0, 2	-
	03	Built-in communication speed	Int485 BaudR	3	9600 bps	0-7	-
	04	Built-in communication frame setting	Int485 Mode	0	D8/PN/S1	0-3	-
	05	Transmission delay after reception	Resp Delay	5		0-1000	ms

Communication Parameters Setting Details

Code	Description
CM.01 Int485 St ID	Set the inverter station ID between 1 and 250.
CM.02 Int485 Proto	Select one of the two built-in protocols: Modbus-RTU or LS INV 485.

Setting		Function
0	Modbus-RTU	Modbus-RTU compatible protocol
2	LS INV 485	Dedicated protocol for the LS inverter

CM.03 Int485 BaudR — Set a communication setting speed up to 115,200 bps.

Setting	Function
0	1,200 bps
1	2,400 bps
2	4,800 bps
3	9,600 bps
4	19,200 bps
5	38,400 bps
6	56K bps
7	115 Kbps

CM.04 Int485 Mode — Set a communication configuration. Set the data length, parity check method, and the number of stop bits.

Setting		Function
0	D8/PN/S1	8-bit data / no parity check / 1 stop bit
1	D8/PN/S2	8-bit data / no parity check / 2 stop bits
2	D8/PE/S1	8-bit data / even parity / 1 stop bit
3	D8/PO/S1	8-bit data / odd parity / 1 stop bit

Code	Description
CM.05 Resp Delay	Set the response time for the slave (inverter) to react to the request from the master. Response time is used in a system where the slave device response is too fast for the master device to process. Set this code to an appropriate value for smooth master-slave communication. 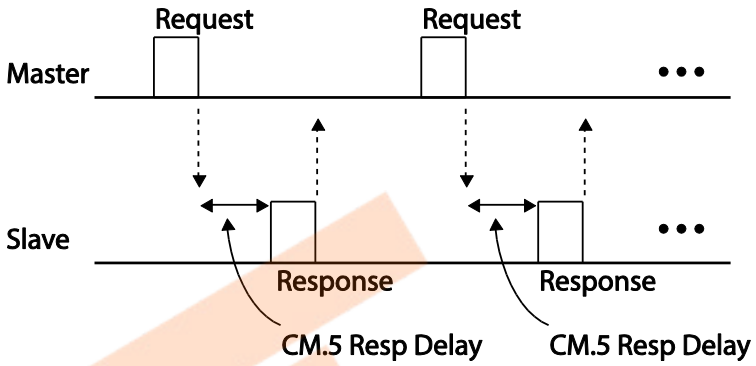

7.2.3 Setting Operation Command and Frequency

To select the built-in RS485 communication as the source of command, set the Frq code to 6 (Int485) on the keypad (basic keypad with 7-segment display). On an LCD keypad, set the DRV code to 3 (Int485). Then, set common area parameters for the operation command and frequency via communication.

Group	Code	Name	LCD Display	Parameter Setting		Setting range	Unit
Pr	12	Speed command loss operation mode	Lost Cmd Mode	1	Free-Run	0-5	-
	13	Time to determine speed command loss	Lost Cmd Time	1.0		0.1-120	s
	14	Operation frequency at speed command loss	Lost Preset F	0.00		Start frequency–Maximum frequency	Hz
OU	31	Multi-function relay 1	Relay 1	13	Lost Command	0-35	-
	33	Multi-function output 1	Q1 Define				

Group	Code	Name	LCD Display	Parameter Setting		Setting range	Unit
Operation	DRV	Command source	Cmd Source*	3	Int 485	0-5	-
	Frq	Frequency setting method	Freq Ref Src	6	Int 485	0-12	-

* Displayed in DRV-06 on an LCD keypad.

7.2.4 Command Loss Protective Operation

Configure the command loss decision standards and protective operations run when a communication problem lasts for a specified period of time.

Command Loss Protective Operation Setting Details

<table>
<tr><th>Code</th><th colspan="3">Description</th></tr>
<tr><td rowspan="8">Pr.12 Lost Cmd Mode,
Pr.13 Lost Cmd Time</td><td colspan="3">Select the operation to run when a communication error has occurred and lasted exceeding the time set at Pr. 13.</td></tr>
<tr><td colspan="2">Setting</td><td>Function</td></tr>
<tr><td>0</td><td>None</td><td>The speed command immediately becomes the operation frequency without any protection function.</td></tr>
<tr><td>1</td><td>Free-Run</td><td>The inverter blocks output. The motor performs in free-run condition.</td></tr>
<tr><td>2</td><td>Dec</td><td>The motor decelerates and then stops at the time set at Pr.07 (Trip Dec Time).</td></tr>
<tr><td>3</td><td>Hold Input</td><td>The inverter calculates the average input value for 10 seconds before the loss of the speed command and uses it as the speed reference.</td></tr>
<tr><td>4</td><td>Hold Output</td><td>The inverter calculates the average output value for 10 seconds before the loss of the speed command and uses it as the speed reference.</td></tr>
<tr><td>5</td><td>Lost Preset</td><td>The inverter operates at the frequency set at Pr. 14 (Lost Preset F).</td></tr>
</table>

7.2.5 Setting Virtual Multi-Function Input

Multi-function input can be controlled using a communication address (0h0385). Set codes CM.70–77 to the functions to operate, and then set the BIT relevant to the function to 1 at 0h0322 to operate it. Virtual multi-function operates independently from In.65-71 analog multi-function inputs and cannot be set redundantly. Virtual multi-function input can be monitored using CM.86 (Virt DI Status). Before you configure the virtual multi-function inputs, set the DRV code according to the command source.

Group	Code	Name	LCD Display	Parameter		Setting range	Unit
CM	70-77	Communication multi-	Virtual DI x	0	None	0-49	-

Group	Code	Name	LCD Display	Parameter		Setting range	Unit
		function input x	(x: 1-8)				
	86	Communication multi-function input monitoring	Virt DI Status	-	-	-	-

Example: When sending an Fx command by controlling virtual multi-function input in the common area via Int485, set CM.70 to FX and set address 0h0322 to 0h0001.

Note

The following are values and functions that are applied to address 0h0322:.

Setting	Function
0h0001	Forward operation (Fx)
0h0003	Reverse operation (Rx)
0h0000	Stop

7.2.6 Saving Parameters Defined by Communication

If you turn off the inverter after setting the common area parameters or keypad parameters via communication and operate the inverter, the changes are lost and the values changed via communication revert to the previous setting values when you turn on the inverter.

Set CNF-48 to 1 (Yes) to allow all the changes over comunication to be saved, so that the inverter retains all the existing values even after the power has been turned off.

Setting address 0h03E0 to 0 and then setting it again to 1 via communication allows the existing parameter settings to be saved. However, setting address 0h03E0 to 1 and then setting it to 0 does not carry out the same function. Parameters defined by communication can only be saved using an LCD keypad.

Group	Code	Name	LCD Display	Parameter Setting		Setting range	Unit
CNF*	48	Save parameters	Parameter Save	0	No	0 -1	-
				1	Yes		

*Available on LCD loader only.

7.2.7 Total Memory Map for Communication

Communication Area	Memory Map	Details
Communication common compatible area	0h0000-0h00FF	iS5, iP5A, iV5, iG5A compatible area
Parameter registration type area	0h0100-0h01FF	Areas registered at CM.31–38 and CM.51–58

Communication Area	Memory Map	Details
	0h0200-0h023F	Area registered for User Group
	0h0240-0h027F	Area registered for Macro Group
	0h0280-0h02FF	Reserved
S100 communication common area	0h0300-0h037F	Inverter monitoring area
	0h0380-0h03DF	Inverter control area
	0h03E0-0h03FF	Inverter memory control area
	0h0400-0h0FFF	Reserved
	0h1100	dr Group
	0h1200	bA Group
	0h1300	Ad Group
	0h1400	Cn Group
	0h1500	In Group
	0h1600	OU Group
	0h1700	CM Group
	0h1800	AP Group
	0h1B00	Pr Group
	0h1C00	M2 Group

7.2.8 Parameter Group for Data Transmission

By defining a parameter group for data transmission, the communication addresses registered in the communication function group (CM) can be used in communication. Parameter group for data transmission may be defined to transmit multiple parameters at once, into the communication frame.

Group	Code	Name	LCD Display	Parameter Setting		Setting range	Unit
CM	31-46	Output communication address x	Para Status-x	-	-	0000-FFFF	Hex
	51-66	Input communication address x	Para Control-x	-	-	0000-FFFF	Hex

Currently Registered CM Group Parameter

Address	Parameter	Assigned content by bit
0h0100-0h0107F	Status Parameter-1~ Status Parameter-16	Parameter communication code value registered at CM.31-46 (Read-only)
0h0110-	Control Parameter-1~	Parameter communication code value registered at

Address	Parameter	Assigned content by bit
0h0117F	Control Parameter-16	CM.51-66 (Read/Write access)

Note

When registering control parameters, register the operation speed (0h0005, 0h0380, 0h0381) and operation command (0h0006, 0h0382) parameters at the end of a parameter control frame. For example, when the parameter control frame has 5 parameter control items (Para Control - x), register the operation speed at Para Control-4 and the operation command to Para Control-5.

7.3 Communication Protocol

The built-in RS-485 communication supports LS INV 485 and Modbus-RTU protocols.

7.3.1 LS INV 485 Protocol

The slave device (inverter) responds to read and write requests from the master device (PLC or PC).

Request

ENQ	Station ID	CMD	Data	SUM	EOT
1 byte	2 bytes	1 byte	n bytes	2 bytes	1 byte

Normal Response

ACK	Station ID	CMD	Data	SUM	EOT
1 byte	2 bytes	1 byte	n x 4 bytes	2 bytes	1 byte

Error Response

NAK	Station ID	CMD	Error code	SUM	EOT
1 byte	2 bytes	1 byte	2 bytes	2 bytes	1 byte

- A request starts with ENQ and ends with EOT.
- A normal response starts with ACK and ends with EOT.
- An error response starts with NAK and ends with EOT.
- A station ID indicates the inverter number and is displayed as a two-byte ASCII-HEX string that uses characters 0-9 and A-F.

- CMD: Uses uppercase characters (returns an IF error if lowercase characters are encountered)—please refer to the following table.

Character	ASCII-HEX	Command
'R'	52h	Read
'W'	57h	Write
'X'	58h	Request monitor registration
'Y;	59h	Perform monitor registration

- Data: ASCII-HEX (for example, when the data value is 3000: 3000 → '0''B''B''8'h → 30h 42h 42h 38h)
- Error code: ASCII-HEX (refer to *7.3.1.4 Error Code* on page *288*)
- Transmission/reception buffer size: Transmission=39 bytes, Reception=44 bytes
- Monitor registration buffer: 8 Words
- SUM: Checks communication errors via sum.
  SUM=a total of the lower 8 bits values for station ID, command and data (Station ID+CMD+Data) in ASCII-HEX.
  For example, a command to read 1 address from address 3000:
  SUM='0'+'1'+'R'+'3'+'0'+'0'+'0'+'1' = 30h+31h+52h+33h+30h+30h+30h+31h = 1**A7**h
  (the control value is not included: ENQ, ACK, NAK, etc.).

ENQ	Station ID	CMD	Address	Number of Addresses	SUM	EOT
05h	'01'	'R'	'3000'	'1'	'A7'	04h
1 byte	2 bytes	1 byte	4 bytes	1 byte	2 bytes	1 byte

Note

Broadcasting
Broadcasting sends commands to all inverters connected to the network simultaneously. When commands are sent from station ID 255, each inverter acts on the command regardless of the station ID. However no response is issued for commands transmitted by broadcasting.

7.3.1.1 Detailed Read Protocol

Read Request: Reads successive n words from address XXXX.

ENQ	Station ID	CMD	Address	Number of Addresses	SUM	EOT
05h	'01'-'FA'	'R'	'XXXX'	'1'-'8' = n	'XX'	04h
1 byte	2 bytes	1 byte	4 bytes	1 byte	2 bytes	1 byte

Total bytes=12. Characters are displayed inside single quotation marks(').

Read Normal Response

ACK	Station ID	CMD	Data	SUM	EOT
06h	'01'-'FA'	'R'	'XXXX'	'XX'	04h
1 byte	2 bytes	1 byte	n x 4 bytes	2 bytes	1 byte

Total bytes= (7 x *n* x 4): a maximum of 39

Read Error Response

NAK	Station ID	CMD	Error code	SUM	EOT
15h	'01'-'FA'	'R'	'**'	'XX'	04h
1 byte	2 bytes	1 byte	2 bytes	2 bytes	1 byte

Total bytes=9

7.3.1.2 Detailed Write Protocol

Write Request: Writes successive n words to address XXXX.

ENQ	Station ID	CMD	Address	Number of Addresses	Data	SUM	EOT
05h	'01'-'FA'	'W'	'XXXX'	'1'-'8' = n	'XXXX…'	'XX'	04h
1 byte	2 bytes	1 byte	4 bytes	1 byte	n x 4 bytes	2 bytes	1 byte

Total bytes= (12 + *n* x 4): a maximum of 44

Write Normal Response

ACK	Station ID	CMD	Data	SUM	EOT
06h	'01'-'FA'	'W'	'XXXX…'	'XX'	04h
1 byte	2 bytes	1 byte	n x 4 bytes	2 bytes	1 byte

Total bytes= (7 + *n* x 4): a maximum of 39

Write Error Response

NAK	Station ID	CMD	Error Code	SUM	EOT
15h	'01'-'FA'	'W'	'**'	'XX'	04h
1 byte	2 bytes	1 byte	2 bytes	2 bytes	1 byte

Total bytes=9

7.3.1.3 Monitor Registration Detailed Protocol

Monitor registration request is made to designate the type of data that requires continuous monitoring and periodic updating.

Monitor Registration Request: Registration requests for *n* addresses (where *n* refers to the number of addresses. The addresses do not have to be contiguous.)

ENQ	Station ID	CMD	Number of Addresses	Address	SUM	EOT
05h	'01'-'FA'	'X'	'1'-'8'=n	'XXXX…'	'XX'	04h
1 byte	2 bytes	1 byte	1 byte	n x 4 bytes	2 bytes	1 byte

Total bytes= (8 + *n* x 4): a maximum of 40

Monitor Registration Normal Response

ACK	Station ID	CMD	SUM	EOT
06h	'01'-'FA'	'X'	'XX'	04h
1 byte	2 bytes	1 byte	2 bytes	1 byte

Total bytes=7

Monitor Registration Error Response

NAK	Station ID	CMD	Error Code	SUM	EOT
15h	'01'-'FA'	'X'	'**'	'XX'	04h
1 byte	2 bytes	1 byte	2 bytes	2 bytes	1 byte

Total bytes=9

Monitor Registration Perform Request: A data read request for a registered address, received from a monitor registration request

ENQ	Station ID	CMD	SUM	EOT
05h	'01'-'FA'	'Y'	'XX'	04h
1 byte	2 bytes	1 byte	2 bytes	1 byte

Total bytes=7

Monitor Registration Execution Normal Response

ACK	Station ID	CMD	Data	SUM	EOT
06h	'01'-'FA'	'Y'	'XXXX…'	'XX'	04h
1 byte	2 bytes	1 byte	n x 4 bytes	2 bytes	1 byte

Total bytes= (7 + *n* x 4): a maximum of 39

Monitor Registration Execution Error Response

NAK	Station ID	CMD	Error Code	SUM	EOT
15h	'01'-'FA'	'Y'	'**'	'XX'	04h
1 byte	2 bytes	1 byte	2 bytes	2 bytes	1 byte

Total bytes=9

7.3.1.4 Error Code

Code	Abbreviation	Description
ILLEGAL FUNCTION	IF	The requested function cannot be performed by a slave because the corresponding function does not exist.
ILLEGAL DATA ADDRESS	IA	The received parameter address is invalid at the slave.
ILLEGAL DATA VALUE	ID	The received parameter data is invalid at the slave.
WRITE MODE ERROR	WM	Tried writing (W) to a parameter that does not allow writing (read-only parameters, or when writing is prohibited during operation)
FRAME ERROR	FE	The frame size does not match.

7.3.1.5 ASCII Code

Character	Hex	Character	Hex	Character	Hex
A	41	q	71	@	40
B	42	r	72	[	5B
C	43	s	73	\	5C
D	44	t	74	]	5D
E	45	u	75		5E
F	46	v	76		5F
G	47	w	77		60
H	48	x	78	{	7B
I	49	y	79	|	7C
J	4A	z	7A	}	7D
K	4B	0	30	-	7E
L	4C	1	31	BEL	07
M	4D	2	32	BS	08
N	4E	3	33	CAN	18
O	4F	4	34	CR	0D

Character	Hex	Character	Hex	Character	Hex
P	50	5	35	DC1	11
Q	51	6	36	DC2	12
R	52	7	37	DC3	13
S	53	8	38	DC4	14
T	54	9	39	DEL	7F
U	55	space	20	DLE	10
V	56	!	21	EM	19
W	57	"	22	ACK	06
X	58	#	23	ENQ	05
Y	59	$	24	EOT	04
Z	5A	%	25	ESC	1B
a	61	&	26	ETB	17
b	62	'	27	ETX	03
c	63	(	28	FF	0C
d	64	)	29	FS	1C
e	65	*	2A	GS	1D
f	66	+	2B	HT	09
g	67	,	2C	LF	0A
h	68	-	2D	NAK	15
i	69	.	2E	NUL	00
j	6A	/	2F	RS	1E
k	6B	:	3A	S1	0F
l	6C	;	3B	SO	0E
m	6D	<	3C	SOH	01
n	6E	=	3D	STX	02
o	6F	>	3E	SUB	1A
p	70	?	3F	SYN	16
				US	1F
				VT	0B

7.3.2 Modbus-RTU Protocol

7.3.2.1 Function Code and Protocol (unit: byte)

In the following section, station ID is the value set at CM.01 (Int485 St ID), and starting address is the communication address. (starting address size is in bytes). For more information about communication addresses, refer to *7.4 Compatible Common Area Parameter* on page *293*.

Function Code #03: Read Holding Register

Query Field Name
Station ID
Function(0x03)
Starting Address Hi
Starting Address Lo
# of Points Hi
# of Points Lo
CRC Lo
CRC Hi

Response Field Name
Station ID
Function (0x03)
Byte Count
Data Hi
Data Lo
…
…
Data Hi
Data Lo
CRC Lo
CRC Hi

number of Points

Function Code #04: Read Input Register

Query Field Name
Station ID
Function(0x04)
Starting Address Hi
Starting Address Lo
# of Points Hi
# of Points Lo
CRC Lo
CRC Hi

Response Field Name
Station ID
Function (0x04)
Byte Count
Data Hi
Data Lo
…
…
Data Hi
Data Lo
CRC Lo
CRC Hi

number of Points

Function Code #06: Preset Single Register

Query Field Name
Station ID
Function (0x06)
Starting Address Hi
Register Address Lo
Preset Data Hi
Preset Data Lo
CRC Lo
CRC Hi

Response Field Name
Station ID
Function (0x06)
Register Address Hi
Register Address Lo
Preset Data Hi
Preset Data Lo
CRC Lo
CRC Hi

Function Code #16 (hex 0h10): Preset Multiple Register

Query Field Name
Station ID
Function (0x10)
Starting Address Hi
Starting Address Lo
# of Register Hi
# of Register Lo
Byte Count
Data Hi
Data Lo
…
…
Data Hi
Data Lo
CRC Lo
CRC Hi

Response Field Name
Station ID
Function (0x10)
Starting Address Hi
Starting Address Lo
# of Register Hi
# of Register Lo
CRC Lo
CRC Hi

number of Points

Exception Code

Code
01: ILLEGAL FUNCTION
02: ILLEGAL DATA ADRESS
03: ILLEGAL DATA VALUE
06: SLAVE DEVICE BUSY

Response

Field Name
Station ID
Function*
Exception Code
CRC Lo
CRC Hi

* The function value uses the top level bit for all query values.

Example of Modbus-RTU Communication in Use

When the Acc time (Communication address 0x1103) is changed to 5.0 sec and the Dec time (Communication address 0x1104) is changed to 10.0 sec.

Frame Transmission from Master to Slave (Request)

Item	Station ID	Function	Starting Address	# of Register	Byte Count	Data 1	Data 2	CRC
Hex	0x01	0x10	0x1102	0x0002	0x04	0x0032	0x0064	0x1202
Description	CM.01 Int485 St ID	Preset Multiple Register	Starting Address -1 (0x1103-1)	-	-	50 (ACC time 5.0sec)	100 (DEC time 10.0sec)	-

Frame Transmission from Slave to Master (Response)

Item	Station ID	Function	Starting Address	# of Register	CRC
Hex	0x01	0x10	0x1102	0x0002	0xE534
Description	CM.01 Int485 St ID	Preset Multiple Register	Starting Address -1 (0x1103-1)	-	-

7.4 Compatible Common Area Parameter

The following are common area parameters compatible with iS5, iP5A, iV5, and iG5A.

Comm. Address	Parameter	Scale	Unit	R/W	Assigned Content by Bit	
0h0000	Inverter model	-	-	R	6: S100	
0h0001	Inverter capacity	-	-	R	0: 0.75 kW, 1: 1.5 kW, 2: 2.2 kW 3: 3.7 kW, 4: 5.5 kW, 5: 7.5 kW 6: 11 kW, 7: 15 kW, 8: 18.5 kW 9: 22 kW, 10: 30 kW, 11: 37 kW 12: 45 kW, 13: 55 kW, 14: 75 kW 256: 0.4 kW, 257: 1.1 kW, 258: 3.0 kW 259: 4.0 kW	
0h0002	Inverter input voltage	-	-	R	0: 220V product	
					1: 440V product	
0h0003	Version	-	-	R	Example 0h0100: Version 1.00	
					Example 0h0101: Version 1.01	
0h0004	Reserved	-	-	R/W		
0h0005	Command frequency	0.01	Hz	R/W		
0h0006	Operation command (option)	-	-	R	B15	Reserved
					B14	0: Keypad Freq, 1: Keypad Torq 2-16: Terminal block multi-step speed 17: Up, 18: Down 19: STEADY 22: V1, 24: V2, 25: I2, 26: Reserved 27: Built-in 485 28: Communication option 30: JOG, 31: PID
					B13	
					B12	
					B11	
					B10	
					B9	
					B8	0: Keypad 1: Fx/Rx-1 2: Fx/Rx-2 3: Built-in 485 4: Communication option
					B7	
					B6	
				R/W	B5	Reserved
					B4	Emergency stop
					B3	W: Trip initialization (0→1), R: Trip status
					B2	Reverse operation (R)
					B1	Forward operation (F)
					B0	Stop (S)
0h0007	Acceleration time	0.1	s	R/W	-	
0h0008	Deceleration time	0.1	s	R/W	-	

Comm. Address	Parameter	Scale	Unit	R/W	Assigned Content by Bit	
0h0009	Output current	0.1	A	R	-	
0h000A	Output frequency	0.01	Hz	R	-	
0h000B	Output voltage	1	V	R	-	
0h000C	DC link voltage	1	V	R	-	
0h000D	Output power	0.1	kW	R	-	
0h000E	Operation status	-	-	R	B15	0: Remote, 1: Keypad Local
					B14	1: Frequency command source by communication (built-in, option)
					B13	1: Operation command source by communication (built-in, option)
					B12	Reverse operation command
					B11	Forward operation command
					B10	Brake release signal
					B9	Jog mode
					B8	Drive stopping.
					B7	DC Braking
					B6	Speed reached
					B5	Decelerating
					B4	Accelerating
					B3	Fault Trip - operates according to OU.30 setting
					B2	Operating in reverse direction
					B1	Operating in forward direction
					B0	Stopped
0h000F	Fault trip information	-	-	R	B15	Reserved
					B14	Reserved
					B13	Reserved
					B12	Reserved
					B11	Reserved
					B10	H/W-Diag
					B9	Reserved
					B8	Reserved
					B7	Reserved
					B6	Reserved
					B5	Reserved
					B4	Reserved
					B3	Level Type trip
					B2	Reserved
					B1	Reserved

Comm. Address	Parameter	Scale	Unit	R/W	Assigned Content by Bit	
					B0	Latch Type trip
0h0010	Input terminal information	-	-	R	B15-B7	Reserved
					B6	P7
					B5	P6
					B4	P5
					B3	P4
					B2	P3
					B1	P2
					B0	P1
0h0011	Output terminal information	-	-	R	B15	Reserved
					B14	Reserved
					B13	Reserved
					B12	Reserved
					B11	Reserved
					B10	Reserved
					B9	Reserved
					B8	Reserved
					B7	Reserved
					B6	Reserved
					B5	Reserved
					B4	Reserved
					B3	Reserved
					B2	Reserved
					B1	Q1
					B0	Relay 1
0h0012	V1	0.1	%	R	V1 input voltage	
0h0013	V2	0.1	%	R	V2 input voltage	
0h0014	I2	0.1	%	R	I2 input current	
0h0015	Motor rotation speed	1	rpm	R	Displays existing motor rotation speed	
0h0016 - 0h0019	Reserved	-	-	-	-	
0h001A	Select Hz/rpm	-	-	R	0: Hz unit, 1: rpm unit	
0h001B	Display the number of poles for the selected motor	-	-	R	Display the number of poles for the selected motor	

7.5 S100 Expansion Common Area Parameter

7.5.1 Monitoring Area Parameter (Read Only)

Comm. Address	Parameter	Scale	Unit	Assigned content by bit	
0h0300	Inverter model	-	-	S100: 0006h	
0h0301	Inverter capacity	-	-	0.4kW : 1900h, 0.75kW: 3200h 1.1kW: 4011h, 1.5kW: 4015h 2.2kW: 4022h, 3.0kW: 4030h 3.7kW: 4037h, 4.0kW: 4040h 5.5kW: 4055h, 7.5kW: 4075h 11kW: 40B0h, 15kW: 40F0h 18.5kW: 4125h, 22kW: 4160h 30kW: 41E0h, 37kW: 4250h 45kW: 42D0h, 55kW: 4370h 75kW: 44B0h	
0h0302	Inverter input voltage/power (Single phase, 3-phase)/cooling method	-	-	100 V single phase self cooling: 0120h, 200 V 3-phase forced cooling: 0231h	
				100 V single phase forced cooling: 0121h, 400 V single phase self cooling: 0420h	
				200 V single phase self cooling: 0220h, 400 V 3-phase self cooling: 0430h	
				200 V 3-phase self cooling: 0230h, 400 V single phase forced cooling: 0421h	
				200 V single phase forced cooling: 0221h, 400 V 3-phase forced cooling: 0431h	
0h0303	Inverter S/W version	-	-	(Ex) 0h0100: Version 1.00	
				0h0101: Version 1.01	
0h0304	Reserved	-	-	-	
0h0305	Inverter operation state	-	-	B15	0: Normal state 4: Warning occurred 8: Fault occurred [operates according to Pr. 30 (Trip Out Mode) setting.]
				B14	
				B13	
				B12	
				B11 - B8	-
				B7	1: Speed searching 2: Accelerating 3: Operating at constant rate 4: Decelerating 5: Decelerating to stop 6: H/W OCS
				B6	
				B5	
				B4	

Comm. Address	Parameter	Scale	Unit	Assigned content by bit	
					7: S/W OCS 8: Dwell operating
				B3 B2 B1 B0	0: Stopped 1: Operating in forward direction 2: Operating in reverse direction 3: DC operating (0 speed control)
0h0306	Inverter operation frequency command source	-	-	B15 B14 B13 B12 B11 B10 B9 B8	Operation command source 0: Keypad 1: Communication option 2: User Sequence 3: Built-in RS 485 4: Terminal block
				B7 B6 B5 B4 B3 B2 B1 B0	Frequency command source 0: Keypad speed 1: Keypad torque 2-4: Up/Down operation speed 5: V1, 7: V2, 8: I2 9: Pulse 10: Built-in RS 485 11: Communication option 12: User Sequence 13: Jog 14: PID 25-39: Multi-step speed frequency
0h0307	LCD keypad S/W version	-	-	(Ex.) 0h0100: Version 1.00	
0h0308	LCD keypad title version	-	-	(Ex.) 0h0101: Version 1.01	
0h0309 -0h30F	Reserved	-	-	-	
0h0310	Output current	0.1	A	-	
0h0311	Output frequency	0.01	Hz	-	
0h0312	Output rpm	0	rpm	-	
0h0313	Motor feedback speed	0	rpm	-32768 rpm-32767 rpm (directional)	
0h0314	Output voltage	1	V	-	
0h0315	DC Link voltage	1	V	-	
0h0316	Output power	0.1	kW	-	
0h0317	Output torque	0.1	%	-	
0h0318	PID reference	0.1	%	-	
0h0319	PID feedback	0.1	%	-	

Comm. Address	Parameter	Scale	Unit	Assigned content by bit	
0h031A	Display the number of poles for the 1st motor	-	-	Displays the number of poles for the first motor	
0h031B	Display the number of poles for the 2nd motor	-	-	Displays the number of poles for the 2nd motor	
0h031C	Display the number of poles for the selected motor	-	-	Displays the number of poles for the selected motor	
0h031D	Select Hz/rpm	-	-	0: Hz, 1: rpm	
0h031E - 0h031F	Reserved	-	-	-	
0h0320	Digital input information			B9	P10(Extension I/O)
				B8	P9(Extension I/O)
				B7	P8(Extension I/O)
				B6	P7(I/O board)
				B5	P6(I/O board)
				B4	P5(I/O board)
				B3	P4(I/O board)
				B2	P3(I/O board)
				B1	P2(I/O board)
				B0	P1(I/O board)
0h0321	Digital output information	-	-	B15	Reserved
				-	Reserved
				B4	Relay 4(Extension I/O)
				B3	Relay 3(Extension I/O)
				B2	Relay 2(30~75kW)
				B1	Q1(0.4~75kW)
				B0	Relay 1(0.4~75kW)
0h0322	Virtual digital input information	-	-	B15	Reserved
				-	Reserved
				B8	Reserved
				B7	Virtual DI 8(CM.77)
				B6	Virtual DI 7(CM.76)
				B5	Virtual DI 6(CM.75)
				B4	Virtual DI 5(CM.74)
				B3	Virtual DI 4(CM.73)
				B2	Virtual DI 3(CM.72)
				B1	Virtual DI 2(CM.71)
				B0	Virtual DI 1(CM.70)
0h0323	Display the selected motor	-	-	0: 1st motor/1: 2nd motor	
0h0324	AI1	0.01	%	Analog input V1 (I/O board)	
0h0325	Reserved	0.01	%		
0h0326	AI3	0.01	%	Analog input V2 (I/O board)	
0h0327	AI4	0.01	%	Analog input I2 (I/O board)	

Comm. Address	Parameter	Scale	Unit	Assigned content by bit	
0h0328	AO1	0.01	%	Analog output 1 (I/O board)	
0h0329	AO2	0.01	%	Analog output 2 (I/O board)	
0h032A	AO3	0.01	%	Analog output 3 (Extension I/O)	
0h032B	AO4	0.01	%	Reserved	
0h032C	Reserved	-	-	-	
0h032D	Inverter module temperature	1	℃	-	
0h032E	Inverter power consumption	0.1	kWh	-	
0h032F	Inverter power consumption	1	MWh	-	
0h0330	Latch type trip information - 1	-	-	B15	Fuse Open Trip
				B14	Over Heat Trip
				B13	Arm Short
				B12	External Trip
				B11	Overvoltage Trip
				B10	Overcurrent Trip
				B9	NTC Trip
				B8	Reserved
				B7	Reserved
				B6	Input open-phase trip
				B5	Output open-phase trip
				B4	Ground Fault Trip
				B3	E-Thermal Trip
				B2	Inverter Overload Trip
				B1	Underload Trip
				B0	Overload Trip
0h0331	Latch type trip information - 2	-	-	B15	Reserved
				B14	Reserved
				B13	Safety B
				B12	Safety A
				B11	Reserved
				B10	Bad option card
				B9	No motor trip
				B8	External brake trip
				B7	Bad contact at basic I/O board
				B6	Pre PID Fail
				B5	Error while writing parameter
				B4	Reserved
				B3	FAN Trip
				B2	Thermal Trip
				B1	Reserved
				B0	Reserved
0h0332	Level type trip	-	-	B15	Reserved

Comm. Address	Parameter	Scale	Unit	Assigned content by bit	
	information			-	-
				B8	Reserved
				B7	Reserved
				B6	Reserved
				B5	Reserved
				B4	Reserved
				B3	Keypad Lost Command
				B2	Lost Command
				B1	LV
				B0	BX
0h0333	H/W Diagnosis Trip information	-	-	B15	Reserved
				-	Reserved
				B6	CommUpdate error
				B5	Queue Full
				B4	Reserved
				B3	Watchdog-2 error
				B2	Watchdog-1 error
				B1	EEPROM error
				B0	ADC error
pr0h0334	Warning information	-	-	B15	Reserved
				-	Reserved
				B10	Reserved
				B9	Auto Tuning failed
				B8	Keypad lost
				B7	Encoder disconnection
				B6	Wrong installation of encoder
				B5	DB
				B4	FAN running
				B3	Lost command
				B2	Inverter Overload
				B1	Underload
				B0	Overload
0h0335 - 0h033F	Reserved	-	-	-	
0h0340	On Time date	0	Day	Total number of days the inverter has been powered on	
0h0341	On Time minute	0	Min	Total number of minutes excluding the total number of On Time days	
0h0342	Run Time date	0	Day	Total number of days the inverter has driven the motor	

Comm. Address	Parameter	Scale	Unit	Assigned content by bit
0h0343	Run Time minute	0	Min	Total number of minutes excluding the total number of Run Time days
0h0344	Fan Time date	0	Day	Total number of days the heat sink fan has been running
0h0345	Fan Time minute	0	Min	Total number of minutes excluding the total number of Fan Time days
0h0346 -0h0348	Reserved	-	-	-
0h0349	Reserved	-	-	-
0h034A	Option 1	-	-	0: None, 9: CANopen
0h034B	Reserved	-	-	
0h034C	Reserved			

7.5.2 Control Area Parameter (Read/ Write)

Comm. Address	Parameter	Scale	Unit	Assigned Content by Bit	
0h0380	Frequency command	0.01	Hz	Command frequency setting	
0h0381	RPM command	1	rpm	Command rpm setting	
0h0382	Operation command	-	-	B7	Reserved
				B6	Reserved
				B5	Reserved
				B4	Reserved
				B3	0 → 1: Free-run stop
				B2	0 → 1: Trip initialization
				B1	0: Reverse command, 1: Forward command
				B0	0: Stop command, 1: Run command
				Example: Forward operation command 0003h, Reverse operation command 0001h	
0h0383	Acceleration time	0.1	s	Acceleration time setting	
0h0384	Deceleration time	0.1	s	Deceleration time setting	
0h0385	Virtual digital input control (0: Off, 1:On)	-	-	B15	Reserved
				-	Reserved
				B8	Reserved
				B7	Virtual DI 8(CM.77)
				B6	Virtual DI 7(CM.76)

Comm. Address	Parameter	Scale	Unit	Assigned Content by Bit	
				B5	Virtual DI 6(CM.75)
				B4	Virtual DI 5(CM.74)
				B3	Virtual DI 4(CM.73)
				B2	Virtual DI 3(CM.72)
				B1	Virtual DI 2(CM.71)
				B0	Virtual DI 1(CM.70)
0h0386	Digital output control (0:Off, 1:On)	-	-	B15	Reserved
				B14	Reserved
				B13	Reserved
				B12	Reserved
				B11	Reserved
				B10	Reserved
				B9	Reserved
				B8	Reserved
				B7	Reserved
				B6	Reserved
				B5	Reserved
				B4	Relay 4 (Ext I/O, OUT-31: None)
				B3	Relay 3 (Ext I/O, OUT-31: None)
				B2	Relay 2 (30-75kW, OUT-31: None)
				B1	Q1 (0.4-75kW, OUT-33: None)
				B0	Relay 1 (0.4-75kW, OUT-31: None)
0h0387	Reserved	-	-	Reserved	
0h0388	PID reference	0.1	%	PID reference command	
0h0389	PID feedback value	0.1	%	PID feedback value	
0h038A	Motor rated current	0.1	A	-	
0h038B	Motor rated voltage	1	V	-	
0h038C-0h038F	Reserved			-	
0h0390	Torque Ref	0.1	%	Torque command	
0h0391	Fwd Pos Torque Limit	0.1	%	Forward motoring torque limit	
0h0392	Fwd Neg Torque Limit	0.1	%	Forward regenerative torque limit	
0h0393	Rev Pos Torque Limit	0.1	%	Reverse motoring torque limit	
0h0394	Rev Neg Torque Limit	0.1	%	Reverse regenerative torque limit	
0h0395	Torque Bias	0.1	%	Torque bias	
0h0396- 0h399	Reserved	-	-	-	
0h039A	Anytime Para	-	-	Set the CNF.20* value (refer to *5.37 Operation*	

Comm. Address	Parameter	Scale	Unit	Assigned Content by Bit
				State Monitor on page 248)
0h039B	Monitor Line-1	-	-	Set the CNF.21* value (refer to 5.37 Operation State Monitor on page 248)
0h039C	Monitor Line-2	-	-	Set the CNF.22* value (refer to 5.37 Operation State Monitor on page 248)
0h039D	Monitor Line-3	-	-	Set the CNF.23* value (refer to 5.37 Operation State Monitor on page 248)

* Displayed on an LCD loader only.

Note

A frequency set via communication using the common area frequency address (0h0380, 0h0005) is not saved even when used with the parameter save function. To save a changed frequency to use after a power cycle, follow these steps:

1. Set dr.07 to 1 (Keypad-1).
2. Set the frequency via communication into the parameter area frequency address (0h1101).
3. Perform the parameter save (0h03E0: '1') before turning off the power. After the power cycle, the frequency set before turning off the power is displayed.

7.5.3 Inverter Memory Control Area Parameter (Read and Write)

Comm. Address	Parameter	Scale	Unit	Changeable During Operation	Function
0h03E0	Save parameters	-	-	X	0: No, 1:Yes
0h03E1	Monitor mode initialization	-	-	O	0: No, 1:Yes
0h03E2	Parameter initialization	-	-	X	0: No, 1: All Grp, 2: Drv Grp 3: bA Grp, 4: Ad Grp, 5: Cn Grp 6: In Grp, 7: OU Grp, 8: CM Grp 9: AP Grp, 12: Pr Grp, 13: M2 Grp Setting is prohibited during fault trip interruptions.
0h03E3	Display changed parameters	-	-	O	0: No, 1: Yes
0h03E4	Reserved	-	-	-	-
0h03E5	Delete all fault history	-	-	O	0: No, 1: Yes

Comm. Address	Parameter	Scale	Unit	Changeable During Operation	Function
0h03E6	Delete user-registrated codes	-	-	O	0: No, 1: Yes
0h03E7	Hide parameter mode	0	Hex	O	Write: 0-9999 Read: 0: Unlock, 1: Lock
0h03E8	Lock parameter mode	0	Hex	O	Write: 0-9999 Read: 0: Unlock, 1: Lock
0h03E9	Easy start on (easy parameter setup mode)	-	-	O	0: No, 1: Yes
0h03EA	Initializing power consumption	-	-	O	0: No, 1: Yes
0h03EB	Initialize inverter operation accumulative time	-	-	O	0: No, 1: Yes
0h03EC	Initialize cooling fan accumulated operation time	-	-	O	0: No, 1: Yes

Note

- When setting parameters in the inverter memory control area, the values are reflected to the inverter operation and saved. Parameters set in other areas via communication are reflected to the inverter operation, but are not saved. All set values are cleared following an inverter power cycle and revert back to its previous values. When setting parameters via communication, ensure that a parameter save is completed prior to shutting the inverter down.
- Set parameters very carefully. After setting a parameter to 0 via communication, set it to another value. If a parameter has been set to a value other than 0 and a non-zero value is entered again, an error message is returned. The previously-set value can be identified by reading the parameter when operating the inverter via communication.
- The addresses 0h03E7 and 0h03E8 are parameters for entering the password. When the password is entered, the condition will change from Lock to Unlock, and vice versa. When the same parameter value is entered continuously, the parameter is executed just once. Therefore, if the same value is entered again, change it to another value first and then re-enter the previous value. For example, if you want to enter 244 twice, enter it in the following order: 244 → 0 → 244.

Caution

It may take longer to set the parameter values in the inverter memory control area because all data is saved to the inverter. Be careful as communication may be lost during parameter setup if parameter setup is continues for an extended period of time.

Memo

8 Table of Functions

This chapter lists all the function settings for S100 series inverter. Set the parameters required according to the following references. If a set value input is out of range, the following messages will be displayed on the keyboard. In these cases, the inverter will not operate with the [ENT] key.

- Set value not allocated: **rd**
- Set value repetition (multi-function input, PID reference, PID feedback related): **OL**
- Set value not allowed (select value, V2, I2): **no**

8.1 Operation Group

The Operation group is used only in the basic keypad mode. It will not be displayed on an LCD loader.

SL: Sensorless vector control (dr.09) , I – IM Sensorless, P – PM Sensorless
*__O/X__: Write-enabled during operation, **7/L/A**: Keypad/LCD keypad/Common

Code	Comm. Address	Name	Keypad Display	Setting Range		Initial Value	Property*	V/F	SL	Ref.
	0h1F00	Target frequency	0.00	0-Maximum frequency(Hz)		0.00	O/7	O	I/P	p.71
-	0h1F01	Acceleration time	ACC	0.0-600.0(s)		20.0	O/7	O	I/P	p.125
-	0h1F02	Deceleration time	dEC	0.0-600.0(s)		30.0	O/7	O	I/P	p.125
-	0h1F03	Command source	drv	0	Keypad	1: Fx/Rx-1	X/7	O	I/P	p.117
				1	Fx/Rx-1					
				2	Fx/Rx-2					
				3	Int 485					
				4	Field Bus[1]					
-	0h1F04	Frequency reference source	Frq	0	Keypad-1	0: Keypad-1	X/7	O	I/P	p.102
				1	Keypad-2					
				2	V1					
				4	V2					
				5	I2					
				6	Int 485					

[1] Table of options are provided separately in the option manual.

Code	Comm. Address	Name	Keypad Display	Setting Range	Initial Value	Property*	V/F	SL	Ref.
				8 Field Bus 12 Pulse					
-	0h1F05	Multi-step speed frequency 1	St1	0.00-Maximum frequency(Hz)	10.00	O/7	O	I/P	p.115
-	0h1F06	Multi-step speed frequency 2	St2	0.00-Maximum frequency(Hz)	20.00	O/7	O	I/P	p.115
-	0h1F07	Multi-step speed frequency 3	St3	0.00-Maximum frequency(Hz)	30.00	O/7	O	I/P	p.115
-	0h1F08	Output current	CUr			-/7	O	I/P	p.90
-	0h1F09	Motor revolutions per minute	Rpm			-/7	O	I/P	-
-	0h1F0A	Inverter direct current voltage	dCL	-	-	-/7	O	I/P	p.90
-	0h1F0B	Inverter output voltage	vOL			-/7	O	I/P	p.90
-	0h1F0C	Out of order signal	nOn			-/7	O	I/P	-
-	0h1F0D	Select rotation direction	drC	F Forward run r Reverse run	F	O/7	O	I/P	-

8.2 Drive group (PAR→dr)

In the following table, data shaded in grey will be displayed when the related code has been selected.

SL: Sensorless vector control (dr.09) , I – IM Sensorless, P – PM Sensorless
*__O/X__: Write-enabled during operation, __7/L/A__: Keypad/LCD keypad/Common

Code	Comm. Address	Name	LCD Display	Setting Range	Initial value	Property*	V/F	SL	Ref.
00	-	Jump Code	Jump Code	1-99	9	O/A	O	I/P	p.71
01[2]	0h1101	Target frequency	Cmd Frequency	Start frequency -	0.00	O/L	O	I/P	p.82

[2] Displayed when an LCD keypad is in use.

Code	Comm. Address	Name	LCD Display	Setting Range	Initial value	Property*	V/F	SL	Ref.
				Maximum frequency (Hz)					
02	0h1102	Torque command	Cmd Torque	-180~180[%]	0.0	O/A	X	I	-
03[2]	0h1103	Acceleration time	Acc Time	0.0-600.0(s)	20.0	O/L	O	I/P	p.125
04[2]	0h1104	Deceleration time	Dec Time	0.0-600.0(s)	30.0	O/L	O	I/P	p.125
06[2]	0h1106	Command source	Cmd Source	0 Keypad 1 Fx/Rx-1 2 Fx/Rx-2 3 Int 485 4 Field Bus 5 UserSeq Link	1: Fx/Rx-1	X/L	O	I/P	p.117
07[2]	0h1107	Frequency reference source	Freq Ref Src	0 Keypad-1 1 Keypad-2 2 V1 4 V2 5 I2 6 Int 485 8 Field Bus 9 UserSeq Link 12 Pulse	0: Keypad-1	X/L	O	I/P	p.102
08	0h1108	Torque reference setting	Trq Ref Src	0 Keypad-1 1 Keypad-2 2 V1 4 V2 5 I2 6 Int 485 8 FieldBus 9 UserSeq Link 12 Pulse	0: Keypad-1	X/A	X	I	-
09	0h1109	Control mode	Control Mode	0 V/F 2 Slip Compen 4 IM Sensorless	0: V/F	X/A	O	I/P	p.132, p.176, p.189

Code	Comm. Address	Name	LCD Display	Setting Range	Initial value	Property*	V/F	SL	Ref.
				6 PM S/L					
10	0h110A	Torque Control	Torque Control	0 No 1 Yes	0: No	X/A	X	I	-
11	0h110B	Jog frequency	Jog Frequency	0.00, Start frequency-Maximum frequency(Hz)	10.00	O/A	O	I/P	p.166
12	0h110C	Jog run acceleration time	Jog Acc Time	0.0-600.0(s)	20.0	O/A	O	I/P	p.166
13	0h110D	Jog run deceleration time	Jog Dec Time	0.0-600.0(s)	30.0	O/A	O	I/P	p.166
14	0h110E	Motor capacity	Motor Capacity	0: 0.2kW, 1: 0.4kW 2: 0.75kW, 3: 1.1kW 4: 1.5kW, 5: 2.2kW 6: 3.0kW, 7: 3.7kW 8: 4.0kW, 9: 5.5kW 10: 7.5kW, 11: 11.0kW 12: 15.0kW, 13: 18.5kW 14: 22.0kW, 15: 30.0kW 16: 37kW 17: 45.0kW 18: 55.0kW 19: 75kW 20: 90kW	Varies by Motor capacity	X/A	O	I/P	p.185
15	0h110F	Torque boost options	Torque Boost	0 Manual 1 Auto1 2 Auto2	0: Manual	X/A	O	X	-
16[3]	0h1110	Forward Torque boost	Fwd Boost	0.0-15.0(%)	2.0	X/A	O	X	p.135

[3] Displayed when dr.15 is set to 0 (Manual) or 2(Auto2)

Code	Comm. Address	Name	LCD Display	Setting Range	Initial value	Property*	V/F	SL	Ref.
17[3]	0h1111	Reverse Torque boost	Rev Boost	0.0-15.0(%)	2.0	X/A	O	X	p.135
18	0h1112	Base frequency	Base Freq	30.00~400.00 (Hz) [V/F, Slip Compen] 40.00~120.00 (Hz) [IM Sensorless] 30.00~180.00 (Hz) [PM Sensorless]	60.00	X/A	O	I/P	p.132
19	0h1113	Start frequency	Start Freq	0.01-10.00(Hz)	0.50	X/A	O	I/P	p.132
20	0h1114	Maximum frequency	Max Freq	40.00~400.00 (Hz) [V/F, Slip Compen] 40.00~120.00 (Hz) [IM Sensorless] 40.00~180.00 (Hz) [PM Sensorless]	60.00	X/A	O	I/P	p.142
21	0h1115	Select speed unit	Hz/Rpm Sel	0 Hz Display 1 Rpm Display	0:Hz Display	O/L	O	I/P	p.115
22[4]	0h1116	(+)Torque gain	(+)Trq Gain	50.0 ~ 150.0[%]	100.0	O/A	X	I	-
23[4]	0h1117	(-)Torque gain	(-)Trq Gain	50.0 ~ 150.0[%]	100.0	O/A	X	I	-
24[4]	0h1118	(-)Torque gain 0	(-)Trq Gain0	50.0 ~ 150.0[%]	80.0	O/A	X	I	-
25[4]	0h1119	(-)Torque offset	(-)Trq Offset	0.0 ~ 100.0[%]	40.0	O/A	X	I	-

[4] Displayed when dr.10 is set to 1 (YES)

Code	Comm. Address	Name	LCD Display	Setting Range		Initial value	Property*	V/F	SL	Ref.
80[5]	0h1150	Select ranges at power input	-	Select ranges inverter displays at power input		0: run frequency	O/7	O	I/P	-
				0	Run frequency					
				1	Acceleration time					
				2	Deceleration time					
				3	Command source					
				4	Frequency reference source					
				5	Multi-step speed frequency 1					
				6	Multi-step speed frequency 2					
				7	Multi-step speed frequency 3					
				8	Output current					
				9	Motor RPM					
				10	Inverter DC voltage					
				11	User select signal (dr.81)					
				12	Currently out of order					
				13	Select run direction					
				14	output current2					

[5] Will not be displayed when an LCD keypad is in use

Code	Comm. Address	Name	LCD Display	Setting Range		Initial value	Property*	V/F	SL	Ref.
				15	Motor RPM2					
				16	Inverter DC voltage2					
				17	User select signal2 (dr.81)					
81[5]	0h1151	Select monitor code	-	Monitors user selected code		0: output voltage	O/7	O	I/P	-
				0	Output voltage(V)					
				1	Output electric power (kW)					
				2	Torque (kgf · m)					
85[6]	0h1155	Parameter Read	-	0	No	0:No	X/7	O	I/P	p.223
				1	Yes					
86[6]	0h1156	Parameter Write	-	0	No	0:No	X/7	O	I/P	p.223
				1	Yes					
87	0h1157	DataFile Ver	DataFile Ver			-	O/7	O	I/P	
89[5]	0h03E3	Display changed parameter	-	0	View All	0: View All	O/7	O	I/P	p.228
				1	View Changed					
90[5]	0h115A	[ESC] key functions	-	0	Move to initial position	0: None	X/7	O	I/P	p78, p.120, p.168
				1	JOG Key					
				2	Local/Remote					
91	0h115B	Smart copy	SmartCopy	0	None	0:None	X/A	O	I/P	-
				1	SmartDownload					
				3	SmartUpLoad					
92[6]	0h115C	Parameter Save	-	0	No	0:No	X/7	O	I/P	p.223
				1	Yes					
93[5]	0h115D	Parameter initialization	-	0	No	0:No	X/7	O	I/P	p.224
				1	All Grp					
				2	dr Grp					

[6] Displayed when a Remote is in use.

Code	Comm. Address	Name	LCD Display	Setting Range		Initial value	Property*	V/F	SL	Ref.
				3	bA Grp					
				4	Ad Grp					
				5	Cn Grp					
				6	In Grp					
				7	OU Grp					
				8	CM Grp					
				9	AP Grp					
				12	Pr Grp					
				13	M2 Grp					
				14	US Grp					
				15	UF Grp					
				16	SPS Grp					
94[5]	0h115E	Password registration		0-9999			O/7	O	I/P	p.226
95[5]	0h115F	Parameter lock settings		0-9999			O/7	O	I/P	p227
97[5]	0h1161	Software version	-				-/7	O	I/P	-
98	0h1162	Display I/O board version	IO S/W Ver				-/A	O	I/P	-
99	0h1163	Display I/O board H/W version	IO H/W Ver	0	Multiple IO	Standard IO	-/A	O	I/P	-
				1	Standard IO					
				2	Standard IO (M)					

8.3 Basic Function group (PAR→bA)

In the following table, the data shaded in grey will be displayed when a related code has been selected.

SL: Sensorless vector control function (dr.09) , I – IM Sensorless, P – PM Sensorless
*__O/X__: Write-enabled during operation, **7/L/A**: Keypad/LCD keypad/Common

Code	Comm. Address	Name	LCD Display	Setting Range		Initial Value	Property*	V/F	SL	Ref.
00	-	Jump Code	Jump Code	1-99		20	O	O	I/P	p.71
01	0h1201	Auxiliary reference source	Aux Ref Src	0	None	0:None	X/A	O	I/P	p.162
				1	V1					
				3	V2					

Code	Comm. Address	Name	LCD Display	Setting Range		Initial Value	Property*	V/F	SL	Ref.
				4	I2					
				6	Pulse					
02[7]	0h1202	Auxiliary command calculation type	Aux Calc Type	0	M+(G*A)	0: M+(GA)	X/A	O	I/P	p.162
				1	Mx (G*A)					
				2	M/(G*A)					
				3	M+[M*(G*A)]					
				4	M+G*2(A-50%)					
				5	Mx[G*2(A-50%)					
				6	M/[G*2(A-50%)]					
				7	M+M*G*2 (A-50%)					
03[7]	0h1203	Auxiliary command gain	Aux Ref Gain	-200.0-200.0(%)		100.0	O/A	O	I/P	p.162
04	0h1204	2nd command source	Cmd 2nd Src	0	Keypad	1: Fx/Rx-1	X/A	O	I/P	p.144
				1	Fx/Rx-1					
				2	Fx/Rx-2					
				3	Int 485					
				4	FieldBus					
05	0h1205	2nd frequency source	Freq 2nd Src	0	Keypad-1	0: Keypad-1	O/A	O	I/P	p.144
				1	Keypad-2					
				2	V1					
				4	V2					
				5	I2					
				6	Int 485					
				8	FieldBus					
				9	UserSeqLink					
				12	Pulse					
06	0h1206	2nd Torque command source	Trq 2nd Src	0	Keypad-1	0: Keypad-1	O	X	I	
				1	Keypad-2					
				2	V1					
				4	V2					
				5	I2					
				6	Int 485					
				8	FieldBus					
				9	UserSeqLink					
				12	Pulse					
07	0h1207	V/F pattern options	V/F Pattern	0	Linear	0: Linear	X/A	O	X	p.132
				1	Square					
				2	User V/F					

[7] Displayed if bA.01 is not set to 0 (None).

Code	Comm. Address	Name	LCD Display	Setting Range		Initial Value	Property*	V/F	SL	Ref.
				3	Square 2					
08	0h1208	Acc/dec standard frequency	Ramp T Mode	0	Max Freq	0: Max Freq	X/A	O	I/P	p.125
				1	Delta Freq					
09	0h1209	Time scale settings	Time Scale	0	0.01 sec	1:0.1 sec	X/A	O	I/P	p.125
				1	0.1 sec					
				2	1 sec					
10	0h120A	Input power frequency	60/50 Hz Sel	0	60Hz	0:60Hz	X/A	O	I/P	p.223
				1	50Hz					
11	0h120B	Number of motor poles	Pole Number	2-48		Dependent on motor setting	X/A	O	I/P	p.176
12	0h120C	Rated slip speed	Rated Slip	0-3000(Rpm)			X/A	O	I	p.176
13	0h120D	Motor rated current	Rated Curr	1.0-1000.0(A)			X/A	O	I/P	p.176
14	0h120E	Motor noload current	Noload Curr	0.0-1000.0(A)			X/A	O	I	p.176
15	0h120F	Motor rated voltage	Rated Volt	170-480(V)		0	X/A	O	I/P	p.136
16	0h1210	Motor efficiency	Efficiency	64-100(%)		Dependent on motor setting	X/A	O	I/P	p.176
17	0h1211	Load inertia rate	Inertia Rate	0-8			X/A	O	I/P	p.176
18	0h1212	Trim power display	Trim Power %	70-130(%)			O/A	O	I/P	-
19	0h1213	Input power voltage	AC Input Volt	170-480V		220/380V	O/A	O	I/P	p.223
20	-	Auto Tuning	Auto Tuning	0	None	0:None	X/A	X	I/P	p.185
				1	All (Rotation type)					
				2	ALL (Static type)					
				3	Rs+Lsigma (Rotation type)					
				6	Tr (Static type)					
				7	All PM					
21	-	Stator resistance	Rs	Dependent on motor setting		Dependent on motor	X/A	X	I/P	p.185
22	-	Leakage inductance	Lsigma				X/A	X	I	p.185

Code	Comm. Address	Name	LCD Display	Setting Range	Initial Value	Property*	V/F	SL	Ref.
23	-	Stator inductance	Ls		setting	X/A	X	I	p.185
24[8]	-	Rotor time constant	Tr	25-5000(ms)	-	X/A	X	I	p.185
25[8]	-	Stator inductance scale	Ls Scale	50 ~ 150[%]	100	X/A	X	I	-
26[8]	-	Rotor time constant scale	Tr Scale	50 ~ 150[%]	100	X/A	X	I	-
28[9]	-	D-axis inductance	Ld (PM)	Settings vary depending on the motor specifications.	0	X/A	X	P	
29[9]		Q-axis inductance	Lq (PM)		0	X/A	X	P	
30[9]		Flux reference	PM Flux Ref		0.147	X/A	X	P	
31[8]		Regeneration inductance scale	Ls Regen Scale	70 ~ 100[%]	80	X/A	X	I	-
32[9]	-	Q-axis inductance scale	Lq(PM) Scale	50–150[%]	100	X/A	X	P	
34[9]	-	PM auto tuning level	Ld,Lq Tune Lev	20.0–50.0[%]	33.3	X/A	X	P	
35[9]	-	PM auto tuning frequency	Ld,Lq Tune Hz	80.0–150.0[%]	100.0	X/A	X	P	
41[10]	0h1229	User frequency1	User Freq 1	0.00-Maximum frequency(Hz)	15.00	X/A	O	X	p.134
42[10]	0h122A	User voltage1	User Volt 1	0-100(%)	25	X/A	O	X	p.134
43[10]	0h122B	User frequency2	User Freq 2	0.00-0.00-Maximum frequency(Hz)	30.00	X/A	O	X	p.134
44[10]	0h122C	User voltage2	User Volt 2	0-100(%)	50	X/A	O	X	p.134
45[10]	0h122D	User frequency3	User Freq 3	0.00-Maximum frequency(Hz)	45.00	X/A	O	X	p.134
46[10]	0h122E	User voltage3	User Volt 3	0-100(%)	75	X/A	O	X	p.134

[8] Displayed when dr.09 is set to 4(IM Sensorless)

[9] Displayed when dr.09 (Control Mode) is set to 6 (PM Sensorless).

[10] Displayed if either bA.07 or M2.25 is set to 2 (User V/F).

Code	Comm. Address	Name	LCD Display	Setting Range	Initial Value	Property*	V/F	SL	Ref.
47[10]	0h122F	User frequency4	User Freq 4	0.00-Maximum frequency(Hz)	Maximum frequency	X/A	O	X	p.134
48[10]	0h1230	User voltage4	User Volt 4	0-100(%)	100	X/A	O	X	p.134
50[11]	0h1232	Multi-step speed frequency1	Step Freq-1	0.00-Maximum frequency(Hz)	10.00	O/L	O	I/P	p.115
51[11]	0h1233	Multi-step speed frequency2	Step Freq-2	0.00-Maximum frequency(Hz)	20.00	O/L	O	I/P	p.115
52[11]	0h1234	Multi-step speed frequency3	Step Freq-3	0.00-Maximum frequency(Hz)	30.00	O/L	O	I/P	p.115
53[12]	0h1235	Multi-step speed frequency4	Step Freq-4	0.00-Maximum frequency(Hz)	40.00	O/A	O	I/P	p.115
54[12]	0h1236	Multi-step speed frequency5	Step Freq-5	0.00-Maximum frequency(Hz)	50.00	O/A	O	I/P	p.115
55[12]	0h1237	Multi-step speed frequency6	Step Freq-6	0.00-Maximum frequency(Hz)	Maximum frequency	O/A	O	I/P	p.115
56[12]	0h1238	Multi-step speed frequency7	Step Freq-7	0.00-Maximum frequency(Hz)	Maximum frequency	O/A	O	I/P	p.115
70	0h1246	Multi-step acceleration time1	Acc Time-1	0.0-600.0(s)	20.0	O/A	O	I/P	p.127
71	0h1247	Multi-step deceleration time1	Dec Time-1	0.0-600.0(s)	20.0	O/A	O	I/P	p.127
72[13]	0h1248	Multi-step acceleration time2	Acc Time-2	0.0-600.0(s)	30.0	O/A	O	I/P	p.127
73[13]	0h1249	Multi-step deceleration time2	Dec Time-2	0.0-600.0(s)	30.0	O/A	O	I/P	p.127
74[13]	0h124A	Multi-step acceleration	Acc Time-3	0.0-600.0(s)	40.0	O/A	O	I/P	p.127

[11] Displayed when an LCD keypad is in use.

[12] Displayed if one of In.65-71 is set to Speed–L/M/H.

[13] Displayed one of In.65-71 is set to Xcel-L/M/H.

Code	Comm. Address	Name	LCD Display	Setting Range	Initial Value	Property*	V/F	SL	Ref.
		time3							
75[13]	0h124B	Multi-step deceleration time3	Dec Time-3	0.0-600.0(s)	40.0	O/A	O	I/P	p.127
76[13]	0h124C	Multi-step acceleration time4	Acc Time-4	0.0-600.0(s)	50.0	O/A	O	I/P	p.127
77[13]	0h124D	Multi-step deceleration time4	Dec Time-4	0.0-600.0(s)	50.0	O/A	O	I/P	p.127
78[13]	0h124E	Multi-step acceleration time5	Acc Time-5	0.0-600.0(s)	40.0	O/A	O	I/P	p.127
79[13]	0h124F	Multi-step deceleration time5	Dec Time-5	0.0-600.0(s)	40.0	O/A	O	I/P	p.127
80[13]	0h1250	Multi-step acceleration time6	Acc Time-6	0.0-600.0(s)	30.0	O/A	O	I/P	p.127
81[13]	0h1251	Multi-step deceleration time6	Dec Time-6	0.0-600.0(s)	30.0	O/A	O	I/P	p.127
82[13]	0h1252	Multi-step acceleration time7	Acc Time-7	0.0-600.0(s)	20.0	O/A	O	I/P	p.127
83[13]	0h1253	Multi-step deceleration time7	Dec Time-7	0.0-600.0(s)	20.0	O/A	O	I/P	p.127

8.4 Expanded Function group (PAR→Ad)

In the following table, the data shaded in grey will be displayed when a related code has been selected.

SL: Sensorless vector control (dr.09) , I – IM Sensorless, P – PM Sensorless
*__O/X__: Write-enabled during operation, **7/L/A**: Keypad/LCD keypad/Common

Code	Comm. Address	Name	LCD Display	Setting Range		Initial Value	Property*	V/F	SL	Ref.
00	-	Jump Code	Jump Code	1-99		24	O/A	O	I/P	p.71
01	0h1301	Acceleration pattern	Acc Pattern	0	Linear	0: Linear	X/A	O	I/P	p.130
02	0h1302	Deceleration pattern	Dec Pattern	1	S-curve		X/A	O	I/P	p.130

Code	Comm. Address	Name	LCD Display	Setting Range	Initial Value	Property*	V/F	SL	Ref.
03[14]	0h1303	S-curve acceleration start point gradient	Acc S Start	1-100(%)	40	X/A	O	I/P	p.130
04[14]	0h1304	S-curve acceleration end point gradient	Acc S End	1-100(%)	40	X/A	O	I/P	p.130
05[15]	0h1305	S-curve deceleration start point gradient	Dec S Start	1-100(%)	40	X/A	O	I/P	p.130
06[15]	0h1306	S-curve deceleration end point gradient	Dec S End	1-100(%)	40	X/A	O	I/P	p.130
07	0h1307	Start Mode	Start Mode	0 Acc 1 DC-Start	0:Acc	X/A	O	I/P	p.138
08[16]	0h1308	Stop Mode	Stop Mode	0 Dec 1 DC-Brake 2 Free-Run 4 Power Braking	0:Dec	X/A	O	I/P	p.139
09	0h1309	Selection of prohibited rotation direction	Run Prevent	0 None 1 Forward Prev 2 Reverse Prev	0: None	X/A	O	I/P	p.122
10	0h130A	Starting with power on	Power-on Run	0 No 1 Yes	0:No	O/A	O	I/P	p.123
12[17]	0h130C	DC braking time at startup	DC-Start Time	0.00-60.00(s)	0.00	X/A	O	I/P	p.138
13	0h130D	Amount of applied DC	DC Inj Level	0-200(%)	50	X/A	O	I/P	p.138

[14] Displayed when Ad. 01 is set to 1 (S-curve).

[15] Displayed when Ad. 02 is set to 1 (S-curve).

[16] DC braking and power braking (Ad.08, stop mode options 1 and 4) are not available when dr.09 (Control Mode) is set to 6 (PM Sensorless).

[17] Displayed when Ad. 07 is set to 1 (DC-Start).

Code	Comm. Address	Name	LCD Display	Setting Range	Initial Value	Property*	V/F	SL	Ref.
14[18]	0h130E	Output blocking time before DC braking	DC-Block Time	0.00- 60.00(s)	0.10	X/A	O	I/P	p.139
15[18]	0h130F	DC braking time	DC-Brake Time	0.00- 60.00(s)	1.00	X/A	O	I/P	p.139
16[18]	0h1310	DC braking rate	DC-Brake Level	0-200(%)	50	X/A	O	I/P	p.139
17[18]	0h1311	DC braking frequency	DC-Brake Freq	Start frequency-60Hz	5.00	X/A	O	I/P	p.139
20	0h1314	Dwell frequency on acceleration	Acc Dwell Freq	Start frequency-Maximum frequency(Hz)	5.00	X/A	O	I/P	p.174
21	0h1315	Dwell operation time on acceleration	Acc Dwell Time	0.0-60.0(s)	0.0	X/A	O	I/P	p.174
22	0h1316	Dwell frequency on deceleration	Dec Dwell Freq	Start frequency-Maximum frequency(Hz)	5.00	X/A	O	I/P	p.174
23	0h1317	Dwell operation time on deceleration	Dec Dwell Time	0.0-60.0(s)	0.0	X/A	O	I/P	p.174
24	0h1318	Frequency limit	Freq Limit	0 No 1 Yes	0:No	X/A	O	I/P	p.142
25[19]	0h1319	Frequency lower limit value	Freq Limit Lo	0.00-Upper limit frequency(Hz)	0.50	O/A	O	I/P	p.142
26[19]	0h131A	Frequency upper limit value	Freq Limit Hi	Lower limit frequency-Maximum frequency(Hz)	maximum frequency	X/A	O	I/P	p.142
27	0h131B	Frequency jump	Jump Freq	0 No 1 Yes	0:No	X/A	O	I/P	p.143
28[20]	0h131C	Jump frequency lower limit1	Jump Lo 1	0.00-Jump frequency upper limit1(Hz)	10.00	O/A	O	I/P	p.143
29[20]	0h131D	Jump	Jump Hi 1	Jump frequency	15.00	O/A	O	I/P	p.143

[18] Displayed when Ad. 08 is set to 1 (DC-Brake).

[19] Displayed when Ad. 24 is set to 1 (Yes).

[20] Displayed when Ad. 27 is set to 1 (Yes).

Code	Comm. Address	Name	LCD Display	Setting Range	Initial Value	Property*	V/F	SL	Ref.
		frequency upper limit1		lower limit1-Maximum frequency(Hz)					
30[20]	0h131E	Jump frequency lower limit2	Jump Lo 2	0.00-Jump frequency upper limit2(Hz)	20.00	O/A	O	I/P	p.143
31[20]	0h131F	Jump frequency upper limit2	Jump Hi 2	Jump frequency lower limit2-Maximum frequency(Hz)	25.00	O/A	O	I/P	p.143
32[20]	0h1320	Jump frequency lower limit3	Jump Lo 3	0.00-Jump frequency upper limit3(Hz)	30.00	O/A	O	I/P	p.143
33[20]	0h1321	Jump frequency upper limit3	Jump Hi 3	Jump frequency lower limit3-Maximum frequency(Hz)	35.00	O/A	O	I/P	p.143
41[21]	0h1329	Brake release current	BR Rls Curr	0.0-180.0(%)	50.0	O/A	O	I/P	p.233
42[21]	0h132A	Brake release delay time	BR Rls Dly	0.00-10.00(s)	1.00	X/A	O	I/P	p.233
44[21]	0h132C	Brake release Forward frequency	BR Rls Fwd Fr	0.00-Maximum frequency(Hz)	1.00	X/A	O	I/P	p.233
45[21]	0h132D	Brake release Reverse frequency	BR Rls Rev Fr	0.00-Maximum frequency(Hz)	1.00	X/A	O	I/P	p.233
46[21]	0h132E	Brake engage delay time	BR Eng Dly	0.00-10.00(s)	1.00	X/A	O	I/P	p.233
47[21]	0h132F	Brake engage frequency	BR Eng Fr	0.00-Maximum frequency(Hz)	2.00	X/A	O	I/P	p.233
50	0h1332	Energy saving operation	E-Save Mode	0 None 1 Manual 2 Auto	0:None	X /A	O	X	p.209

[21] Displayed if either OU.31~33 is set to 35 (BR Control).

Code	Comm. Address	Name	LCD Display	Setting Range		Initial Value	Property*	V/F	SL	Ref.
51[22]	0h1333	Energy saving level	Energy Save	0-30(%)		0	O/A	O	X	p.209
60	0h133C	Acc/Dec time transition frequency	Xcel Change Fr	0.00-Maximum frequency(Hz)		0.00	X/A	O	I/P	p.129
61	0h133D	Rotation count speed gain	Load Spd Gain	0.1~6000.0[%]		100.0	O/A	O	I/P	-
62	0h133E	Rotation count speed scale	Load Spd Scale	0	x 1	0: x 1	O/A	O	I/P	-
				1	x 0.1					
				2	x 0.01					
				3	x 0.001					
				4	x 0.0001					
63	0h133F	Rotation count speed unit	Load Spd Unit	0	Rpm	0: rpm	O/A	O	I/P	-
				1	mpm					
64	0h1340	Cooling fan control	FAN Control	0	During Run	0:During Run	O/A	O	I/P	p.222
				1	Always ON					
				2	Temp Control					
65	0h1341	Up/down operation frequency save	U/D Save Mode	0	No	0:No	O/A	O	I/P	p.169
				1	Yes					
66	0h1342	Output contact On/Off control options	On/Off Ctrl Src	0	None	0:None	X/A	O	I/P	p.169
				1	V1					
				3	V2					
				4	I2					
				6	Pulse					
67	0h1343	Output contact On level	On-Ctrl Level	Output contact off level-100.00%		90.00	X/A	O	I/P	p.234
68	0h1344	Output contact Off level	Off-Ctrl Level	-100.00-output contact on level (%)		10.00	X/A	O	I/P	p.234
70	0h1346	Safe operation selection	Run En Mode	0	Always Enable	0:Always Enable	X/A	O	I/P	p.172
				1	DI Dependent					
	0h1347	Safe	Run Dis	0	Free-Run	0:Free-	X/A	O	I/P	p.172

[22] Displayed if Ad.50 is not set to 0 (None).

Code	Comm. Address	Name	LCD Display	Setting Range		Initial Value	Property*	V/F	SL	Ref.
71[23]		operation stop options	Stop	1	Q-Stop	Run				
				2	Q-Stop Resume					
72[23]	0h1348	Safe operation deceleration time	Q-Stop Time	0.0-600.0(s)		5.0	O/A	O	I/P	p.172
74[24]	0h134A	Selection of regeneration evasion function for press	RegenAvd Sel	0	No	0:No	X/A	O	I	p.235
				1	Yes					
75[24]	0h134B	Voltage level of regeneration evasion motion for press	RegenAvd Level	200V : 300-400V		350	X/A	O	I	p.235
				400V : 600-800V		700				
76[25]	0h134C	Compensation frequency limit of regeneration evasion for press	CompFreq Limit	0.00- 10.00Hz		1.00	X/A	O	I	p.235
77[25]	0h134D	Regeneration evasion for press P gain	RegenAvd Pgain	0.0- 100.0%		50.0	O/A	O	I	p.235
78[25]	0h134E	Regeneration evasion for press I gain	RegenAvd Igain	20-30000(ms)		500	O/A	O	I	p.235
79	0h134F	DB Unit turn on voltage level	DB Turn On Lev	200V: Min[26]~400[V]		390[V]	X/A	O	I/P	-
				400V: Min[26]~800[V]		780[V]				
80	0h1350	Fire mode selection	Fire Mode Sel	0	None	0:None	X/A	O	I/P	p.155
				1	Fire Mode					
				2	Fire Mode					

[23] Displayed when Ad.70 is set to 1 (DI Dependent).

[24] Displayed when dr.09 (Control Mode) is not set to 6 (PM Sensorless).

[25] Displayed when Ad.74 is set to 1 (Yes).

[26] DC voltage value (convert bA.19 AC Input voltage) + 20V (200V type) or + 40V (400V type)

Code	Comm. Address	Name	LCD Display	Setting Range		Initial Value	Property*	V/F	SL	Ref.
					Test					
81[27]	0h1351	Fire mode frequency	Fire Mode Freq	0.00~60.00(Hz]		60.00	X/A	O	I/P	p.155
82[27]	0h1352	Fire mode direction	Fire Mode Dir	0	Forward	0: Forward	X/A	O	I/P	p.155
				1	Reverse					
83[27]		Fire Mode Count	Fire Mode Cnt	Can not be modified						p.155
85[27]	0h1355	Up-down mode selection	U/D Mode Sel	0	U/D Normal	0: U/D Normal	X/A	O	I/P	p.155
				1	U/D Step					
				2	U/D Step+ Norm					
86[27]	0h1356	Up-down step frequency	U/D Step Freq	0-maxFreq		0	O/A	O	I/P	p.157
87[27]	0h1357	Overmodulation mode selection	OVM Mode Sel	0	No	0: No	X/A	O	X	p.157
				1	Yes					

8.5 Control Function group (PAR→Cn)

In the following table, the data shaded in grey will be displayed when a related code has been selected.

SL: Sensorless vector control (dr.09) , I – IM Sensorless, P – PM Sensorless
***O/X**: Write-enabled during operation, **7/L/A**: Keypad/LCD keypad/Common

Code	Comm. Address	Name	LCD Display	Setting Range		Initial Value	Property*	V/F	SL	Ref.
00	-	Jump Code	Jump Code	1-99		4	O/A	O	I/P	p.71
04	0h1404	Carrier frequency	Carrier Freq	Heavy Duty	V/F: 1.0~15.0 (kHz) [28] IM: 2.0~15.0 (kHz) PM: 2.0~10.0 (kHz)	3.0	X/A	O	I/P	p.218
				Normal	V/F: 1.0~ 5.0	2.0				p.218

[27] Displayed when Ad.80 is set to 1 (Yes).

[28] The setting range is for 5.5-22kW models. For more information on the entire capacities, refer to *11.8 Continuous Rated Current Derating*.

Code	Comm. Address	Name	LCD Display	Setting Range		Initial Value	Property*	V/F	SL	Ref.
				Duty[29]	(kHz) [30] IM: 2.0~5.0 (kHz)					
05	0h1405	Switching mode	PWM Mode	0	Normal PWM	0:Normal PWM	X/A	O	I	p.218
				1	Lowleakage PWM					
09[31]	0h1409	Initial excitation time	PreExTime	0.00-60.00(s)		1.00	X/A	X	I	p.191
10[31]	0h140A	Initial excitation amount	Flux Force	100.0-300.0(%)		100.0	X/A	X	I	p.191
11	0h140B	Continued operation duration	Hold Time	0.00-60.00(s)		0.00	X/A	X	I	p.191
12[32]	0h140D	PM S/L speed controller proportional gain1	ASR P Gain 1	0~5000		100	X/A	X	P	
13[32]	0h140F	PM S/L speed controller integral gain1	ASR P Gain 1	0~5000		150	X/A	X	P	
15[32]	0h1410	PM S/L speed controller proportional gain2	ASR P Gain 1	0~5000		100	X/A	X	P	
16[32]	0h1410	PM S/L speed controller integral gain2	ASR P Gain 1	0~9999		150	X/A	x	P	
20[31]	0h1414	Sensorless 2nd gain display setting	SL2 G View Sel	0	No	0:No	O/A	X	I	p.191
				1	Yes					

[29] PM synchronous motor sensorless vector control mode does not support normal duty operation [when dr.09 (Control Mode) is set to 6 (PM Sensorless)].

[30] Refer to the Footnote 28.

[31] Displayed when dr.09 (Control Mode) is not set to 6 (PM Sensorless).

[32] Displayed when dr.09 (Control Mode) is set to 6 (PM Sensorless).

Code	Comm. Address	Name	LCD Display	Setting Range	Initial Value	Property*	V/F	SL	Ref.
21[31]	0h1415	Sensorless speed controller proportional gain1	ASR-SL P Gain1	0-5000(%)	Dependent on motor setting	O/A	X	I	p.191
22[31]	0h1416	Sensorless speed controller integral gain1	ASR-SL I Gain1	10-9999(ms)		O/A	X	I	p.191
23[33]	0h1417	Sensorless speed controller proportional gain2	ASR-SL P Gain2	1.0-1000.0(%)		O/A	X	I	p.191
24[33]	0h1418	Sensorless speed controller integral gain2	ASR-SL I Gain2	1.0-1000.0(%)		O/A	X	I	p.191
25[33]	0h1419	Sensorless speed controller integral gain 0	ASR-SL I Gain0	10~9999(ms)		O/A	X	I	-
26[33]	0h141A	Flux estimator proportional gain	Flux P Gain	10-200(%)		O/A	X	I	p.191
27[33]	0h141B	Flux estimator integral gain	Flux I Gain	10-200(%)		O/A	X	I	p.191
28[33]	0h141C	Speed estimator proportional gain	S-Est P Gain1	0-32767		O/A	X	I	p.191
29[33]	0h141D	Speed estimator integral gain1	S-Est I Gain1	100-1000		O/A	X	I	p.191
30[33]	0h141E	Speed estimator integral gain2	S-Est I Gain2	100-10000		O/A	X	I	p.191
31[33]	0h141F	Sensorless current controller proportional gain	ACR SL P Gain	10-1000		O/A	X	I	p.191

[33] Displayed when dr.09 is set to 4 (IM Sensorless) and Cn.20 is set to 1 (YES).

Code	Comm. Address	Name	LCD Display	Setting Range	Initial Value	Property*	V/F	SL	Ref.
32[33]	0h1420	Sensorless current controller integral gain	ACR SL I Gain	10 -1000		O/A	X	I	p.191
33[34]	0h1421	PM D-axis back-EMF estimation gain [%]	PM EdGain Perc	0~300.0[%]	100.0	X/A	X	P	
34[34]	0h1422	PM Q-axis back-EMF estimation gain [%]	PM EqGain Perc	0~300.0[%]	100.0	X/A	X	P	
35[34]	0h1423	Initial pole position detection retry number	PD Repeat Num	0~10	2	X/A	X	P	
36[34]	0h1424	Initial pole position detection pulse interval	Pulse Interval	1~100	20	X/A	X	P	
37[34]	0h1425	Initial pole position detection current level [%]	Pulse Curr %	10~100	15	X/A	X	P	
38[34]	0h1426	Initial pole position detection voltage level [%]	Pulse Volt %	100~4000	500	X/A	X	P	
39[34]	0h1427	PM dead time range [%]	PMdeadBand Per	50.0~100.0	100.0	X/A	X	P	
40[34]	0h1428	PM dead time voltage [%]	PMdeadVolt Per	50.0~100.0	100.0	X/A	X	P	
41[34]	0h1429	Speed estimator P gain1	PM SpdEst Kp	0~32000	100	X/A	X	P	
42[34]	0h142A	Speed estimator I gain1	PM SpdEst Ki	0~32000	10	X/A	X	P	
43[34]	0h142B	Speed	PM SpdEst	0~32000	300	X/A	X	P	

[34] Displayed when dr.09 (Control Mode) is set to 6 (PM Sensorless).

Code	Comm. Address	Name	LCD Display	Setting Range		Initial Value	Property*	V/F	SL	Ref.
		estimator P gain2	Kp 2							
44[34]	0h142C	Speed estimator I gain2	PM SpdEst Ki 2	0~32000		30	X/A	X	P	
45[34]	0h142D	Speed estimator feed forward high speed rate [%]	PM Flux FF %	0~100[%]		30.0	X/A	X	P	
46[34]	0h142E	Initial pole position detection options	Init Angle Sel	0	None	1	X/A		P	- -
				1	Angle					
				2	Align					
48[34]	-	Current controller P gain	ACR P Gain	0-10000		1200	O/A	X	I/P	-
49[34]	-	Current controller I gain	ACR I Gain	0-10000		120	O/A	X	I/P	-
50[34]	0h1432	Voltage controller limit	V Con HR	0~100.0[%]		10.0	X/A	X	P	
51[34]	0h1433	Voltage controller I gain	V Con Ki	0~1000.0[%]		10.0	X/A	X	P	
52	0h1434	Torque controller output filter	Torque Out LPF	0-2000(ms)		0	X/A	X	I/P	p.191
53	0h1435	Torque limit setting options	Torque Lmt Src	0	Keypad-1	0: Keypad-1	X/A	X	I/P	p.191
				1	Keypad-2					
				2	V1					
				4	V2					
				5	I2					
				6	Int 485					
				8	FieldBus					
				9	UserSeqLink					
				12	Pulse					
54[35]	0h1436	Positive-direction reverse torque limit	FWD +Trq Lmt	0.0-200.0(%)		180	O/A	X	I/P	p.191

[35] Displayed when dr.09 is set to 4 (IM Sensorless). This will change the initial value of the parameter at Ad.74 (Torque limit) to 150%.

Code	Comm. Address	Name	LCD Display	Setting Range		Initial Value	Property*	V/F	SL	Ref.
55[35]	0h1437	Positive-direction regeneration torque limit	FWD -Trq Lmt	0.0-200.0(%)		180	O/A	X	I/P	p.191
56[35]	0h1438	Negative-direction regeneration torque limit	REV +Trq Lmt	0.0-200.0(%)		180	O/A	X	I/P	p.191
57[35]	0h1439	Negative-direction reverse torque limit	REV -Trq Lmt	0.0-200.0(%)		180	O/A	X	I/P	p.191
62[35]	0h143E	Speed limit Setting	Speed Lmt Src	0	Keypad-1	0: Keypad-1	X/A	X	I/P	-
				1	Keypad-2					
				2	V1					
				4	V2					
				5	I2					
				6	Int 485					
				7	FieldBus					
				8	UserSeqLink					
63[35]	0h143F	Positive-direction speed limit	FWD Speed Lmt	0.00~ Maximum frequency (Hz)		60.00	O/A	X	I/P	-
64[35]	0h1440	Negative-direction speed limit	REV Speed Lmt	0.00~ Maximum frequency (Hz)		60.00	O/A	X	I/P	-
65[35]	0h1441	Speed limit operation gain	Speed Lmt Gain	100~5000[%]		500	O/A	X	I/P	-
69[36]		PM speed search current	SS Pulse Curr	15		10~100	O/A	X	P	
70	0h 1446	Speed search mode selection	SS Mode	0	Flying Start-1[37]	0: Flying Start-1	X/A	O	I/P	p.212
				1	Flying Start-2					
				2	Flying Start-3[36]					
71	0h1447	Speed search operation selection	Speed Search	bit	0000- 1111	0000	X/A	O	I/P	p.212
				0001	Selection of speed search					

[36] Displayed when dr.09 (Control Mode) is set to 6 (PM Sensorless).

[37] Will not be displayed if dr.09 is set to 4 (IM Sensorless).

Code	Comm. Address	Name	LCD Display	Setting Range		Initial Value	Property*	V/F	SL	Ref.
					on acceleration	38				
				0010	When starting on initialization after fault trip					
				0100	When restarting after instantaneous power interruption					
				1000	When starting with power on					
72[39]	0h1448	Speed search reference current	SS Sup-Current	80-200(%)		150	O/A	O	I/P	p.212
73[40]	0h1449	Speed search proportional gain	SS P-Gain	0-9999		Flying Start-1 : 100 Flying Start-2 : 600[41]	O/A	O	I	p.212
74[40]	0h144A	Speed search integral gain	SS I-Gain	0-9999		Flying Start-1 : 200 Flying Start-2 : 1000	O/A	O	I	p.212
75[40]	0h144B	Output blocking time before speed search	SS Block Time	0.0-60.0(s)		1.0	X/A	O	I/P	p.212
76[40]	0h144C	Speed search Estimator gain	Spd Est Gain	50-150(%)		100	O/A	O	I	-

[38] The initial value 0000 will be displayed on the keypad as 0000.

[39] Displayed when any of the Cn.71 code bits are set to 1 and Cn70 is set to 0 (Flying Start-1).

[40] Displayed when any of the Cn.71 code bits are set to 1.

[41] The initial value is 1200 when the motor-rated capacity is less than 7.5 kW

Code	Comm. Address	Name	LCD Display	Setting Range		Initial Value	Property*	V/F	SL	Ref.
77	0h144D	Energy buffering selection	KEB Select	0 1 2	No KEB-1 KEB-2	0:No	X/A	O	I/P	p.196
78[42]	0h144E	Energy buffering start level	KEB Start Lev	110.0-200.0(%)		130.0	X/A	O	I/P	p.196
79[42]	0h144F	Energy buffering stop level	KEB Stop Lev	Cn78~210.0(%)		135.0	X/A	O	I/P	p.196
80[42]	0h1450	Energy buffering P gain	KEB P Gain	0-20000		1500	O/A	O	I/P	p.196
81[42]	0h1451	Energy buffering I gain	KEB I Gain	1~20000		500	O/A	O	I/P	p.196
82[42]	0h1452	Energy buffering Slip gain	KEB Slip Gain	0~2000.0%		30.0	O/A	O	I	p.196
83[42]	0h1453	Energy buffering acceleration time	KEB Acc Time	0.0~600.0(s)		10.0	O/A	O	I/P	p.196
85[43]	0h1455	Flux estimator proportional gain1	Flux P Gain1	100-700		370	O/A	X	I	p.191
86[43]	0h1456	Flux estimator proportional gain2	Flux P Gain2	0-100		0	O/A	X	I	p.191
87[43]	0h1457	Flux estimator proportional gain3	Flux P Gain3	0-500		100	O/A	X	I	p.191
88[43]	0h1458	Flux estimator integral gain1	Flux I Gain1	0-200		50	O/A	X	I	p.191
89[43]	0h1459	Flux estimator integral gain2	Flux I Gain2	0-200		50	O/A	X	I	p.191
90[43]	0h145A	Flux estimator integral gain3	Flux I Gain3	0-200		50	O/A	X	I	p.191
91[43]	0h145B	Sensorless voltage compensation1	SL Volt Comp1	0-60		Dependent on motor	O/A	X	I	p.191
92[43]	0h145C	Sensorless voltage	SL Volt Comp2	0-60			O/A	X	I	p.191

[42] Displayed when Cn.77 is not set to 0 (No).

[43] Displayed when Cn.20 is set to 1 (Yes).

Code	Comm. Address	Name	LCD Display	Setting Range	Initial Value	Property*	V/F	SL	Ref.
		compensation2			setting				
93[43]	0h145D	Sensorless voltage compensation3	SL Volt Comp3	0-60		O/A	X	I	p.191
94[43]	0h145E	Sensorless field weakening start frequency	SL FW Freq	80.0-110.0(%)	100.0	X/A	X	I	p.189
95[43]	0h145F	Sensorless gain switching frequency	SL Fc Freq	0.00-8.00(Hz)	2.00	X/A	X	I	p.189

8.6 Input Terminal Block Function group (PAR→In)

In the following table, the data shaded in grey will be displayed when a related code has been selected.

SL: Sensorless vector control (dr.09) , I – IM Sensorless, P – PM Sensorless
*__O/X__: Write-enabled during operation, **7/L/A**: Keypad/LCD keypad/Common

Code	Comm. Address	Name	LCD Display	Setting Range	Initial Value	Property*	V/F	SL	Ref.
00	-	Jump Code	Jump Code	1-99	65	O/A	O	I/P	p.71
01	0h1501	Frequency for maximum analog input	Freq at 100%	Start frequency-Maximum frequency(Hz)	Maximum frequency	O/A	O	I/P	p.103
02	0h1502	Torque at maximum analog input	Torque at100%	0.0-200.0(%)	100.0	O/A	X	X	-
05	0h1505	V1 input voltage display	V1 Monitor(V)	-12.00-12.00(V)	0.00	-/A	O	I/P	p.103
06	0h1506	V1 input polarity selection	V1 Polarity	0 Unipolar 1 Bipolar	0: Unipolar	X/A	O	I/P	p.103
07	0h1507	Time constant of V1 input filter	V1 Filter	0-10000(ms)	10	O/A	O	I/P	p.103
08	0h1508	V1 Minimum input voltage	V1 Volt x1	0.00-10.00(V)	0.00	O/A	O	I/P	p.103
09	0h1509	V1 output at Minimum voltage (%)	V1 Perc y1	0.00-100.00(%)	0.00	O/A	O	I/P	p.103
10	0h150A	V1 Maximum input voltage	V1 Volt x2	0.00-12.00(V)	10.00	O/A	O	I/P	p.103
11	0h150B	V1 output at Maximum voltage (%)	V1 Perc y2	0.00-100.00(%)	100.00	O/A	O	I/P	p.103
12[44]	0h150C	V1 Minimum input voltage	V1 -Volt x1'	-10.00- 0.00(V)	0.00	O/A	O	I/P	p.107
13[44]	0h150D	V1output at Minimum voltage (%)	V1 -Perc y1'	-100.00-0.00(%)	0.00	O/A	O	I/P	p.107
14[44]	0h150E	V1 Maximum	V1 -Volt x2'	-12.00- 0.00(V)	-10.00	O/A	O	I/P	p.107

[44] Displayed when In.06 is set to 1 (Bipolar).

Code	Comm. Address	Name	LCD Display	Setting Range	Initial Value	Property*	V/F	SL	Ref.
		input voltage							
15[44]	0h150F	V1 output at Maximum voltage (%)	V1 -Perc y2'	-100.00-0.00(%)	-100.00	O/A	O	I/P	p.107
16	0h1510	V1 rotation direction change	V1 Inverting	0 No 1 Yes	0: No	O/A	O	I/P	p.103
17	0h1511	V1 quantization level	V1 Quantizing	0.00[45], 0.04-10.00(%)	0.04	X/A	O	I/P	p.103
35[46]	0h1523	V2 input voltage display	V2 Monitor(V)	0.00-12.00(V)	0.00	-/A	O	I/P	p.110
37[46]	0h1525	V2 input filter time constant	V2 Filter	0-10000(ms)	10	O/A	O	I/P	p.110
38[46]	0h1526	V2 Minimum input voltage	V2 Volt x1	0.00-10.00(V)	0.00	O/A	X	I/P	p.110
39[46]	0h1527	V2 output at Minimum voltage (%)	V2 Perc y1	0.00-100.00(%)	0.00	O/A	O	I/P	p.110
40[46]	0h1528	V2 Maximum input voltage	V2 Volt x2	0.00-10.00(V)	10	O/A	X	I/P	p.110
41[46]	0h1529	V2 output at Maximum voltage (%)	V2 Perc y2	0.00-100.00(%)	100.00	O/A	O	I/P	p.110
46[46]	0h152E	V2 rotation direction change	V2 Inverting	0 No 1 Yes	0:No	O/A	O	I/P	p.110
47[46]	0h152F	V2 quantization level	V2 Quantizing	0.00[45], 0.04-10.00(%)	0.04	O/A	O	I/P	p.110
50[47]	0h1532	I2 input current display	I2 Monitor (mA)	0-24(mA)	0.00	-/A	O	I/P	p.109
52[47]	0h1534	I2 input filter time constant	I2 Filter	0-10000(ms)	10	O/A	O	I/P	p.109

[45] Quantizing is not used when set to 0.

[46] Displayed when V is selected on the analog current/voltage input circuit selection switch (SW2).

[47] Displayed when I is selected on the analog current/voltage input circuit selection switch (SW2).

Code	Comm. Address	Name	LCD Display	Setting Range		Initial Value	Property*	V/F	SL	Ref.
53[47]	0h1535	I2 minimum input current	I2 Curr x1	0.00-20.00(mA)		4.00	O/A	O	I/P	p.109
54[47]	0h1536	I2 output at Minimum current (%)	I2 Perc y1	0.00-100.00(%)		0.00	O/A	O	I/P	p.109
55[47]	0h1537	I2 maximum input current	I2 Curr x2	0.00-24.00(mA)		20.00	O/A	O	I/P	p.109
56[47]	0h1538	I2 output at Maximum current (%)	I2 Perc y2	0.00-100.00(%)		100.00	O/A	O	I/P	p.109
61[47]	0h153D	Changing rotation direction of I2	I2 Inverting	0	No	0:No	O/A	O	I/P	p.109
				1	Yes					
62[47]	0h153E	I2 quantization level	I2 Quantizing	0.00[45],0.04-10.00(%)		0.04	O/A	O	I/P	p.109
65	0h1541	P1 terminal function setting	P1 Define	0	None	1:Fx	X/A	O	I/P	p.117
				1	Fx					
66	0h1542	P2 terminal function setting	P2 Define	2	Rx	2:Rx	X/A	O	I/P	p.117
67	0h1543	P3 terminal function setting	P3 Define	3	RST	5:BX	X/A	O	I/P	p.272
68	0h1544	P4 terminal function setting	P4 Define	4	External Trip	3:RST	X/A	O	I/P	p.264
69	0h1545	P5 terminal function setting	P5 Define	5	BX	7:Sp-L	X/A	O	I/P	p.272
70	0h1546	P6 terminal function setting	P6 Define	6	JOG	8:Sp-M	X/A	O	I/P	p.166
71	0h1547	P7 terminal function setting	P7 Define	7	Speed-L	9:Sp-H	X/A	O	I/P	p.115
				8	Speed-M					p.115
				9	Speed-H					p.115
				11	XCEL-L					p.127
				12	XCEL-M					p.127
				13	RUN Enable					p.172
				14	3-Wire					p.171

Code	Comm. Address	Name	LCD Display	Setting Range		Initial Value	Property*	V/F	SL	Ref.
				15	2nd Source					p.144
				16	Exchange					p.221
				17	Up					p.169
				18	Down					p.169
				20	U/D Clear					p.169
				21	Analog Hold					p.114
				22	I-Term Clear					p.178
				23	PID Openloop					p.178
				24	P Gain2					p.178
				25	XCEL Stop					p.132
				26	2nd Motor					p.220
				34	Pre Excite					-
				38	Timer In					p.232
				40	dis Aux Ref					p.162
				46	FWD JOG					p.168
				47	REV JOG					p.168
				49	XCEL-H					p.127
				50	User Seq					p.148
				51	Fire Mode					p.155
				52	KEB-1 Select					p.196
				54	TI[48]					p.111
84	0h1554	Multi-function input terminal On filter selection	DI Delay Sel	P7 ~ P1		1 1111[49]	O/A	O	I/P	p.145
				0	Disable (Off)					
				1	Enable (On)					
85	0h1555	Multi-function input terminal On filter	DI On Delay	0-10000(ms)		10	O/A	O	I/P	p.145
86	0h1556	Multi-function input	DI Off Delay	0-10000(ms)		3	O/A	O	I/P	p.145

[48] Displayed only when the P5 terminal function is selected in Standard I/O.

[49] The initial value 11111 will be displayed on the keypad as 

Code	Comm. Address	Name	LCD Display	Setting Range		Initial Value	Property*	V/F	SL	Ref.
		terminal Off filter								
87	0h1557	Multi-function input contact selection	DI NC/NO Sel	P7 – P1		0 0000[50]	X/A	O	I/P	p.145
				0	A contact (NO)					
				1	B contact (NC)					
89	0h1559	Multi-step command delay time	InCheck Time	1-5000(ms)		1	X/A	O	I/P	p.115
90	0h155A	Multi-function input terminal status	DI Status	P7 – P1		0 0000[50]	-/A	O	I/P	p.145
				0	release(Off)					
				1	Connection (On)					
91	0h155B	Pulse input amount display	Pulse Monitor (kHz)	0.00-50.00(kHz)		0.00	-/A	O	I/P	p.111
92	0h155C	TI input filter time constant	TI Filter	0-9999(ms)		10	O/A	O	I/P	p.111
93	0h155D	TI Minimum input pulse	TI Pls x1	0.00-32.00(kHz)		0.00	O/A	O	I/P	p.111
94	0h155E	TI output at Minimum pulse (%)	TI Perc y1	0.00-100.00(%)		0.00	O/A	O	I/P	p.111
95	0h155F	TI Maximum input pulse	TI Pls x2	0.00-32.00(kHz)		32.00	O/A	O	I/P	p.111
96	0h1560	TI Output at Maximum pulse (%)	TI Perc y2	0-100(%)		100.00	O/A	O	I/P	p.111
97	0h1561	TI rotation direction change	TI Inverting	0	No	0:No	O/A	O	I/P	p.111
				1	Yes					
98	0h1562	TI quantization level	TI Quantizing	0.00[45], 0.04-10.00(%)		0.04	O/A	O	I/P	p.111
99	0h1563	SW1(NPN/PNP) SW2(V1/V2[I2]) status	IO SW State	Bit	00~11	00	-/A	O	I/P	-
				00	V2, NPN					
				01	V2, PNP					
				10	I2, NPN					
				11	I2, PNP					

[50] The initial value 0000 will be displayed on the keypad as 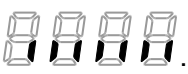.

8.7 Output Terminal Block Function group (PAR→OU)

In the following table, the data shaded in grey will be displayed when a related code has been selected.

SL: Sensorless vector control (dr.09) , I – IM Sensorless, P – PM Sensorless
*__O/X__: Write-enabled during operation, **7/L/A**: Keypad/LCD keypad/Common

Code	Comm. Address	Name	LCD Display	Setting Range	Initial Value	Property*	V/F	SL	Ref.
00	-	Jump Code	JumpCode	1-99	30	O/A	O	I/P	p.71
01	0h1601	Analog output 1 item	AO1 Mode	0 Frequency 1 Output Current 2 Output Voltage 3 DCLink Voltage 4 Torque 5 Output Power 6 Idse 7 Iqse 8 Target Freq 9 Ramp Freq 10 Speed Fdb 12 PID Ref Value 13 PID Fdb Value 14 PID Output 15 Constant	0:Frequency	O/A	O	I/P	p.236
02	0h1602	Analog output 1 gain	AO1 Gain	-1000.0-1000.0(%)	100.0	O/A	O	I/P	p.236
03	0h1603	Analog output 1 bias	AO1 Bias	-100.0-100.0(%)	0.0	O/A	O	I/P	p.236
04	0h1604	Analog output 1 filter	AO1 Filter	0-10000(ms)	5	O/A	O	I/P	p.236
05	0h1606	Analog constant output 1	AO1 Const %	0.0-100.0(%)	0.0	O/A	O	I/P	p.236
06	0h1606	Analog output 1 monitor	AO1 Monitor	0.0-1000.0(%)	0.0	-/A	O	I/P	p.236
07	0h1607	Analog output 2 item	AO2 Mode	0 Frequency 1 Output Current 2 Output Voltage 3 DCLink Voltage 4 Torque 5 Output Power 6 Idse	0: Frequency	O/A	O	I/P	p.236

Code	Comm. Address	Name	LCD Display	Setting Range		Initial Value	Property*	V/F	SL	Ref.
				7	Iqse					
				8	Target Freq					
				9	Ramp Freq					
				10	Speed Fdb					
				12	PID Ref Value					
				13	PID Fdb Value					
				14	PID Output					
				15	Constant					
08	0h1608	Analog output 2 gain	AO2 Gain	-1000.0~1000.0(%)		100.0	O/A	O	I/P	p.236
09	0h1609	Analog output 2 bias	AO2 Bias	-100.0~100.0(%)		0.0	O/A	O	I/P	p.236
10	0h160A	Analog output 2 filter	AO2 Filter	0~10000(ms)		5	O/A	O	I/P	p.236
11	0h160B	Analog constant output 2	AO2 Const %	0.0~100.0(%)		0.0	O/A	O	I/P	p.236
12	0h160C	Analog output 2 monitor	AO2 Monitor	0.0~1000.0(%)		0.0	-/A	O	I/P	p.236
30	0h161E	Fault output item	Trip Out Mode	bit	000-111	010[51]	O/A	O	I/P	p.246
				1	Low voltage					
				2	Any faults other than low voltage					
				3	Automatic restart final failure					
31 (32)	0h161F (0h 1620)	Multi-function relay 1 item (Relay 2)	Relay 1 (Relay 2)	0	None	29:Trip (14: Run)	O/A	O	I/P	p.242
				1	FDT-1					
				2	FDT-2					
				3	FDT-3					
				4	FDT-4					
				5	Over Load					
				6	IOL					
				7	Under Load					
				8	Fan Warning					
				9	Stall					
				10	Over Voltage					

[51] The initial value 0010 will be displayed on the keypad as 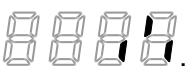.

Code	Comm. Address	Name	LCD Display	Setting Range		Initial Value	Property*	V/F	SL	Ref.
				11	Low Voltage					
				12	Over Heat					
				13	Lost Command					
				14	Run					
				15	Stop					
				16	Steady					
				17	Inverter Line					
				18	Comm Line					
				19	Speed Search					
				22	Ready					
				28	Timer Out					
				29	Trip					
				31	DB Warn%ED					
				34	On/Off Control					
				35	BR Control					
				37	FAN Exchange					
				38	Fire Mode					
				40	KEB Operating					
				0	None					
				1	FDT-1					
				2	FDT-2					
				3	FDT-3					
				4	FDT-4					
				5	Over Load					
				6	IOL					
				7	Under Load					
				8	Fan Warning					
				9	Stall					
				10	Over Voltage					
				11	Low Voltage					
				12	Over Heat					
33	0h1621	Multi-function output1 item	Q1 Define	13	Lost Command	14:Run	O/A	O	I/P	p.242
				14	Run					
				15	Stop					
				16	Steady					
				17	Inverter Line					
				18	Comm Line					
				19	Speed Search					
				22	Ready					
				28	Timer Out					
				29	Trip					
				31	DB Warn%ED					
				34	On/Off Control					
				35	BR Control					
				37	FAN Exchange					

Code	Comm. Address	Name	LCD Display	Setting Range		Initial Value	Property*	V/F	SL	Ref.
				38	Fire Mode					
				39	TO					
				40	KEB Operating					
41	0h1629	Multi-function output monitor	DO Status	-		00	-/A	-	-	p.242
50	0h1632	Multi-function output On delay	DO On Delay	0.00-100.00(s)		0.00	O/A	O	I/P	p.247
51	0h1633	Multi-function output Off delay	DO Off Delay	0.00-100.00(s)		0.00	O/A	O	I/P	p.247
52	0h1634	Multi-function output contact selection	DO NC/NO Sel	Q1, Relay1		00[52]	X/A	O	I/P	p.247
				0	A contact (NO)					
				1	B contact (NC)					
53	0h1635	Fault output On delay	TripOut OnDly	0.00-100.00(s)		0.00	O/A	O	I/P	p.246
54	0h1636	Fault output Off delay	TripOut OffDly	0.00-100.00(s)		0.00	O/A	O	I/P	p.246
55	h1637	Timer On delay	TimerOn Delay	0.00-100.00(s)		0.00	O/A	O	I/P	p.232
56	0h1638	Timer Off delay	TimerOff Delay	0.00-100.00(s)		0.00	O/A	O	I/P	p.232
57	0h1639	Detected frequency	FDT Frequency	0.00-Maximum frequency(Hz)		30.00	O/A	O	I/P	p.232
58	0h163A	Detected frequency band	FDT Band	0.00-Maximum frequency(Hz)		10.00	O/A	O	I/P	p.242
61	0h163D	Pulse output gain	TO Mode	0	Frequency	0: Frequency	O/A	O	I/P	p.239
				1	Output Current					
				2	Output Voltage					
				3	DCLink Voltage					
				4	Torque					
				5	Output Power					
				6	Idse					
				7	Iqse					
				8	Target Freq					

[52] The initial value 0000 will be displayed on the keypad as 0.0.0.0.

Code	Comm. Address	Name	LCD Display	Setting Range	Initial Value	Property*	V/F	SL	Ref.
				9 Ramp Freq 10 Speed Fdb 12 PID Ref Value 13 PID Fdb Value 14 PID Output 15 Constant					
62	0h163E	Pulse output gain	TO Gain	-1000.0-1000.0(%)	100.0	O/A	O	I/P	p.239
63	0h163F	Pulse output bias	TO Bias	-100.0-100.0(%)	0.0	O/A	O	I/P	p.239
64	0h1640	Pulse output filter	TO Filter	0-10000(ms)	5	O/A	O	I/P	p.239
65	0h1641	Pulse output constant output 2	TO Const %	0.0-100.0(%)	0.0	O/A	O	I/P	p.239
66	0h1642	Pulse output monitor	TO Monitor	0.0-1000.0(%)	0.0	O/A	O	I/P	p.239

8.8 Communication Function group (PAR→CM)

In the following table, the data shaded in grey will be displayed when a related code has been selected.

SL: Sensorless vector control (dr.09) , I – IM Sensorless, P – PM Sensorless
***O/X:** Write-enabled during operation, **7/L/A**: Keypad/LCD keypad/Common

Code	Comm. Address	Name	LCD Display	Setting Range	Initial Value	Property*	V/F	SL	Ref.
00	-	Jump Code	Jump Code	1-99	20	O/A	O	I/P	p.71
01	0h1701	Built-in communication inverter ID	Int485 St ID	1-250	1	O/A	O	I/P	p.279
02[53]	0h1702	Built-in communication protocol	Int485 Proto	0 ModBus RTU 2 LS INV 485	0: ModBus RTU	O/A	O	I/P	p.279
03[53]	0h1703	Built-in communication speed	Int485 BaudR	0 1200 bps 1 2400 bps 2 4800 bps 3 9600 bps 4 19200 bps 5 38400 bps 6 56 Kbps 7 115 Kbps[54]	3: 9600 bps	O/A	O	I/P	p.279
04[53]	0h1704	Built-in communication frame setting	Int485 Mode	0 D8/PN/S1 1 D8/PN/S2 2 D8/PE/S1 3 D8/PO/S1	0: D8/PN/S1	O/A	O	I/P	p.279
05[53]	0h1705	Transmission delay after reception	Resp Delay	0-1000(ms)	5ms	O/A	O	I/P	p.279
06[55]	0h1706	Communication option S/W version	FBus S/W Ver	-	0.00	O/A	O	I/P	-
07[55]	0h1707	Communication option inverter ID	FBus ID	0-255	1	O/A	O	I/P	-

[53] Will not be displayed when MultiKPD is set.

[54] 115,200bps

[55] Displayed only when a communication option card is installed.

Code	Comm. Address	Name	LCD Display	Setting Range	Initial Value	Property*	V/F	SL	Ref.
08[55]	0h1708	FIELD BUS communication speed	FBUS BaudRate	-	12Mbps	-/A	O	I/P	-
09[55]	0h1709	Communication option LED status	FieldBus LED	-	-	O/A	O	I/P	-
30[56]	0h171E	Number of output parameters	ParaStatus Num	0-16	3	O/A	O	I/P	
31	0h171F	Output Communication address1	Para Status-1	0000-FFFF Hex	000A	O/A	O	I/P	p.283
32	0h1720	Output Communication address2	Para Status-2	0000-FFFF Hex	000E	O/A	O	I/P	p.283
33	0h1721	Output Communication address3	Para Status-3	0000-FFFF Hex	000F	O/A	O	I/P	p.283
34	0h1722	Output Communication address4	Para Status-4	0000-FFFF Hex	0000	O/A	O	I/P	p.283
35	0h1723	Output Communication address5	Para Status-5	0000-FFFF Hex	0000	O/A	O	I/P	p.283
36	0h1724	Output Communication address6	Para Status-6	0000-FFFF Hex	0000	O/A	O	I/P	p.283
37	0h1725	Output Communication address7	Para Status-7	0000-FFFF Hex	0000	O/A	O	I/P	p.283
38	0h1726	Output Communication address8	Para Status-8	0000-FFFF Hex	0000	O/A	O	I/P	p.283
39	0h1727	Output Communication address9	Para Status-9	0000~FFFF Hex	0000	O/A	O	I/P	p.283
40	0h1728	Output Communication address10	Para Status-10	0000~FFFF Hex	0000	O/A	O	I/P	p.283
41	0h1729	Output Communication address11	Para Status-11	0000~FFFF Hex	0000	O/A	O	I/P	p.283
42	0h173A	Output	Para	0000~FFFF	0000	O/A	O	I/P	p.283

[56] Ex) In case of COM-30:8, only COM-31~38 parameters can be communicated.

Code	Comm. Address	Name	LCD Display	Setting Range	Initial Value	Property*	V/F	SL	Ref.
		Communication address12	Status-12	Hex					
43	0h173B	Output Communication address13	Para Status-13	0000~FFFF Hex	0000	O/A	O	I/P	p.283
44	0h173C	Output Communication address14	Para Status-14	0000~FFFF Hex	0000	O/A	O	I/P	p.283
45	0h173D	Output Communication address15	Para Status-15	0000~FFFF Hex	0000	O/A	O	I/P	p.283
46	0h173E	Output Communication address16	Para Status-16	0000~FFFF Hex	0000	O/A	O	I/P	p.283
50[57]	0h1732	Number of input parameters	Para Ctrl Num	0-16	2	O/A	O	I/P	
51	0h1733	Input Communication address1	Para Control-1	0000-FFFF Hex	0005	X/A	O	I/P	p.283
52	0h1734	Input Communication address2	Para Control-2	0000-FFFF Hex	0006	X/A	O	I/P	p.283
53	0h1735	Input Communication address3	Para Control-3	0000-FFFF Hex	0000	X/A	O	I/P	p.283
54	0h1736	Input Communication address4	Para Control-4	0000-FFFF Hex	0000	X/A	O	I/P	p.283
55	0h1737	Input Communication address5	Para Control-5	0000-FFFF Hex	0000	X/A	O	I/P	p.283
56	0h1738	Input Communication address6	Para Control-6	0000-FFFF Hex	0000	X/A	O	I/P	p.283
57	0h1739	Input Communication address7	Para Control-7	0000-FFFF Hex	0000	X/A	O	I/P	p.283
58	0h173A	Input Communication address8	Para Control-8	0000-FFFF Hex	0000	X/A	O	I/P	p.283
59	0h173B	Input Communication address9	Para Control-9	0000~FFFF Hex	0000	X/A	O	I/P	p.283
60	0h173C	Input	Para	0000~FFFF	0000	X/A	O	I/P	p.283

[57] Ex) In case of COM-50:8, only COM-51~58 parameters can be communicated.

Code	Comm. Address	Name	LCD Display	Setting Range		Initial Value	Property*	V/F	SL	Ref.
		Communication address10	Control-10	Hex						
61	0h173D	Input Communication address11	Para Control-11	0000~FFFF Hex		0000	X/A	O	I/P	p.283
62	0h173E	Input Communication address12	Para Control-12	0000~FFFF Hex		0000	X/A	O	I/P	p.283
63	0h173F	Input Communication address13	Para Control-13	0000~FFFF Hex		0000	X/A	O	I/P	p.283
64	0h1740	Input Communication address14	Para Control-14	0000~FFFF Hex		0000	X/A	O	I/P	p.283
65	0h1741	Input Communication address15	Para Control-15	0000~FFFF Hex		0000	X/A	O	I/P	p.283
66	0h1742	Input Communication address16	Para Control-16	0000~FFFF Hex		0000	X/A	O	I/P	p.283
68	0h1744	Field bus data swap	FBus Swap Sel	0	No	0	X/A	O	I/P	*p.283*
				1	Yes					
70	0h1746	Communication multi-function input 1	Virtual DI 1	0	None	0:None	O/A	O	I/P	*p.253*
71	0h1747	Communication multi-function input 2	Virtual DI 2	1	Fx	0:None	O/A	O	I/P	*p.253*
72	0h1748	Communication multi-function input 3	Virtual DI 3	2	Rx	0:None	O/A	O	I/P	*p.253*
73	0h1749	Communication multi-function input 4	Virtual DI 4	3	RST	0:None	O/A	O	I/P	*p.253*
74	0h174A	Communication multi-function input 5	Virtual DI 5	4	External Trip	0:None	O/A	O	I/P	*p.253*
75	0h174B	Communication multi-function input 6	Virtual DI 6	5	BX	0:None	O/A	O	I/P	*p.253*
76	0h174C	Communication multi-function input 7	Virtual DI 7	6	JOG	0:None	O/A	O	I/P	*p.253*
77	0h174D	Communication multi-function input 8	Virtual DI 8	7	Speed-L	0:None	O/A	O	I/P	*p.253*
				8	Speed-M					
				9	Speed-H					

Code	Comm. Address	Name	LCD Display	Setting Range		Initial Value	Property*	V/F	SL	Ref.
				11	XCEL-L					
				12	XCEL-M					
				13	RUN Enable					
				14	3-Wire					
				15	2nd Source					
				16	Exchange					
				17	Up					
				18	Down					
				20	U/D Clear					
				21	Analog Hold					
				22	I-Term Clear					
				23	PID Openloop					
				24	P Gain2					
				25	XCEL Stop					
				26	2nd Motor					
				34	Pre Excite					
				38	Timer In					
				40	dis Aux Ref					
				46	FWD JOG					
				47	REV JOG					
				49	XCEL-H					
				50	User Seq					
				51	Fire Mode					
				52	KEB-1 Select					
				54	TI[58]					
86	0h1756	Communication multi-function input monitoring	Virt DI Status	-		0	X/A	O	I/P	p.281
90	0h175A	Selection of data frame communication monitor	Comm Mon Sel	0	Int485	0	O/A	O	I/P	-
				1	KeyPad					
91	0h175B	Data frame Rev count	Rcv Frame Num	0~65535		0	O/A	O	I/P	-
92	0h175C	Data frame Err count	Err Frame Num	0~65535		0	O/A	O	I/P	-
93	0h175D	NAK frame	NAK	0~65535		0	O/A	O	I/P	-

[58] Displayed only when the P5 terminal function is selected in Standard I/O.

Code	Comm. Address	Name	LCD Display	Setting Range		Initial Value	Property*	V/F	SL	Ref.
		count	Frame Num							
94[59]	-	Communication data upload	Comm Update	0	No	0:No	X/A	O	I/P	-
				1	Yes					
95	0h1760	communication selection	Int 485 Func	0	Disable All	0: Disable All	X/A	O	I/P	p.146
				3	M-KPD Ready					

8.9 Application Function group (PAR→AP)

In the following table, the data shaded in grey will be displayed when a related code has been selected.

SL: Sensorless vector control (dr.09) , I – IM Sensorless, P – PM Sensorless
***O/X**: Write-enabled during operation, **7/L/A**: Keypad/LCD keypad/Common

Code	Comm. Address	Name	LCD Display	Setting Range		Initial Value	Property*	V/F	SL	Ref.
00	-	Jump Code	Jump Code	1-99		20	O/A	O	I/P	p.71
01	0h1801	Application function selection	App Mode	0	None	0: None	X/A	O	I/P	p.178
				1	-					
				2	Proc PID					
02	-	Enable user sequence	User Seq En	0	No	0:No	X/A	O	I/P	p.148
				1	Yes					
16[60]	0h1810	PID output monitor	PID Output	(%)		0.00	-/A	O	I/P	p.178
17[60]	0h1811	PID reference monitor	PID Ref Value	(%)		50.00	-/A	O	I/P	p.178
18[60]	0h1812	PID feedback monitor	PID Fdb Value	(%)		0.00	-/A	O	I/P	p.178
19[60]	0h1813	PID reference setting	PID Ref Set	-100.00-100.00(%)		50.00	O/A	O	I/P	p.178
20[60]	0h1814	PID reference source	PID Ref Source	0	Keypad	0: Keypad	X/A	O	I/P	p.178
				1	V1					
				3	V2					
				4	I2					
				5	Int 485					

[59] Displayed only when a communication option card is installed. Repeated execution of this command may result in a H/W diag trip for communication option card protection.

Code	Comm. Address	Name	LCD Display	Setting Range		Initial Value	Property*	V/F	SL	Ref.
				7	FieldBus					
				8	UserSeqLink					
				11	Pulse					
21[60]	0h1815	PID feedback source	PID F/B Source	0	V1	0:V1	X/A	O	I/P	p.178
				2	V2					
				3	I2					
				4	Int 485					
				6	FieldBus					
				7	UserSeqLink					
				10	Pulse					
22[60]	0h1816	PID controller proportional gain	PID P-Gain	0.0-1000.0(%)		50.0	O/A	O	I/P	p.178
23[60]	0h1817	PID controller integral time	PID I-Time	0.0-200.0(s)		10.0	O/A	O	I/P	p.178
24[60]	0h1818	PID controller differentiation time	PID D-Time	0-1000(ms)		0	O/A	O	I/P	p.178
25[60]	0h1819	PID controller feed-forward compensation gain	PID F-Gain	0.0-1000.0(%)		0.0	O/A	O	I/P	p.178
26[60]	0h181A	Proportional gain scale	P Gain Scale	0.0-100.0(%)		100.0	X/A	O	I/P	p.178
27[60]	0h181B	PID output filter	PID Out LPF	0-10000(ms)		0	O/A	O	I/P	p.178
28[60]	0h181C	PID Mode	PID Mode	0	Process PID	0	X/A	O	I/P	-
				1	Normal PID					
29[60]	0h181D	PID upper limit frequency	PID Limit Hi	PID lower limit frequency-300.00(Hz)		60.00	O/A	O	I/P	p.178
30[60]	0h181E	PID lower limit frequency	PID Limit Lo	-300.00 -PID upper limit frequency(Hz)		-60.00	O/A	O	I/P	p.178
31[60]	0h181F	PID output inverse	PID Out Inv	0	No	0:No	X/A	O	I/P	p.178
				1	Yes					
32[60]	0h1820	PID output scale	PID Out Scale	0.1-1000.0(%)		100.0	X/A	O	I/P	p.178

Code	Comm. Address	Name	LCD Display	Setting Range	Initial Value	Property*	V/F	SL	Ref.
34[60]	0h1822	PID controller motion frequency	Pre-PID Freq	0.00-Maximum frequency(Hz)	0.00	X/A	O	I/P	p.178
35[60]	0h1823	PID controller motion level	Pre-PID Exit	0.0-100.0(%)	0.0	X/A	O	I/P	p.178
36[60]	0h1824	PID controller motion delay time	Pre-PID Delay	0-9999(s)	600	O/A	O	I/P	p.178
37[60]	0h1825	PID sleep mode delay time	PID Sleep DT	0.0-999.9(s)	60.0	O/A	O	I/P	p.178
38[60]	0h1826	PID sleep mode frequency	PID Sleep Freq	0.00-Maximum frequency(Hz)	0.00	O/A	O	I/P	p.178
39[60]	0h1827	PID wake-up level	PIDWakeUp Lev	0-100(%)	35	O/A	O	I/P	p.178
40[60]	0h1828	PID wake-up mode setting	PID WakeUp Mod	0 Below Level 1 Above Level 2 Beyond Level	0:Below Level	O/A	O	I/P	p.178
42[60]	0h182A	PID controller unit selection	PID Unit Sel	0 % 1 Bar 2 mBar 3 Pa 4 kPa 5 Hz 6 rpm 7 V 8 I 9 kW 10 HP 11 ℃ 12 °F 13 CUST 14 PSI 15 inWC 16 gl/m	0:%	O/A	O	I/P	p.178
43[60]	0h182B	PID unit gain	PID Unit Gain	0.00-300.00(%)	100.00	O/A	O	I/P	p.178
44[60]	0h182C	PID unit scale	PID Unit Scale	0 x100 1 x10 2 x 1 3 x 0.1 4 x 0.01	2:x 1	O/A	O	I/P	p.178

Code	Comm. Address	Name	LCD Display	Setting Range	Initial Value	Property*	V/F	SL	Ref.
45[60]	0h182D	PID 2nd proportional gain	PID P2-Gain	0.0-1000.0(%)	100.0	X/A	O	I/P	p.178

8.10 Protection Function group (PAR→Pr)

In the following table, the data shaded in grey will be displayed when a related code has been selected.

SL: Sensorless vector control (dr.09) , I – IM Sensorless, P – PM Sensorless
***O/X**: Write-enabled during operation, **7/L/A**: Keypad/LCD keypad/Common

Code	Comm. Address	Name	LCD Display	Setting Range		Initial Value	Property*	V/F	SL	Ref.
00	-	Jump Code	Jump Code	1-99		40	O/A	O	I/P	p.71
04	0h1B04	Load level setting	Load Duty	0[61]	Normal Duty	1:Heavy Duty	X/A	O	I/P	p.253
				1	Heavy Duty					
05	0h1B05	Input/output open-phase protection	Phase Loss Chk	bit	00-11	00[62]	X/A	O	I/P	p.263
				01	Output open phase					
				10	Input open phase					
06	0h1B06	Input voltage range during open-phase	IPO V Band	1-100(V)		15	X/A	O	I/P	p.263
07	0h1B07	Deceleration time at fault trip	Trip Dec Time	0.0-600.0(s)		3.0	O/A	O	I/P	-
08	0h1B08	Selection of startup on trip reset	RST Restart	0	No	0:No	O/A	O	I/P	p.217
				1	Yes					

[61] IP66 models do not support normal duty setting.

[62] The initial value 0000 will be displayed on the keypad as 0000.

Code	Comm. Address	Name	LCD Display	Setting Range	Initial Value	Property*	V/F	SL	Ref.
09	0h1B09	Number of automatic restarts	Retry Number	0-10	0	O/A	O	I/P	p.217
10[63]	0h1B0A	Automatic restart delay time	Retry Delay	0.0-60.0(s)	1.0	O/A	O	I/P	p.217
12	0h1B0C	Motion at speed command loss	Lost Cmd Mode	0 None 1 Free-Run 2 Dec 3 Hold Input 4 Hold Output 5 Lost Preset	0:None	O/A	O	I/P	p.265
13[64]	0h1B0D	Time to decide speed command loss	Lost Cmd Time	0.1-120(s)	1.0	O/A	O	I/P	p.265
14[64]	0h1B0E	Operation frequency at speed command loss	Lost Preset F	Start frequency-Maximum frequency(Hz)	0.00	O/A	O	I/P	p.265
15[64]	0h1B0F	Analog input loss decision level	AI Lost Level	0 Half x1 1 Below x1	0:Half of x1	O/A	O	I/P	p.265
17	0h1B11	Overload warning selection	OL Warn Select	0 No 1 Yes	0:No	O/A	O	I/P	p.253
18	0h1B12	Overload alarm level	OL Warn Level	30-180(%)	150	O/A	O	I/P	p.253
19	0h1B13	Overload warning time	OL Warn Time	0.0-30.0(s)	10.0	O/A	O	I/P	p.253
20	0h1B14	Motion at overload fault	OL Trip Select	0 None 1 Free-Run 2 Dec	1:Free-Run	O/A	O	I/P	p.253
21	0h1B15	Overload fault level	OL Trip Level	30-200(%)	180	O/A	O	I/P	p.253

[63] Displayed when Pr.09 is set higher than 0.

[64] Displayed when Pr.12 is not set to 0 (NONE).

Code	Comm. Address	Name	LCD Display	Setting Range	Initial Value	Property*	V/F	SL	Ref.
22	0h1B16	Overload fault time	OL Trip Time	0.0-60.0(s)	60.0	O/A	O	I/P	p.253
25	0h1B19	Underload warning selection	UL Warn Sel	0 No 1 Yes	0:No	O/A	O	I/P	p.269
26	0h1B1A	Underload warning time	UL Warn Time	0.0-600.0(s)	10.0	O/A	O	I/P	p.269
27	0h1B1B	Underload fault selection	UL Trip Sel	0 None 1 Free-Run 2 Dec	0:None	O/A	O	I/P	p.269
28	0h1B1C	Underload fault time	UL Trip Time	0.0-600.0(s)	30.0	O/A	O	I/P	p.269
29	0h1B1D	Underload lower limit level	UL LF Level	10-30(%)	30	O/A	O	I/P	p.269
30	0h1B1E	Underload upper limit level	UL BF Level	30-100(%)	30	O/A	O	I/P	p.269
31	0h1B1F	No motor motion at detection	No Motor Trip	0 None 1 Free-Run	0:None	O/A	O	I/P	p.274
32	0h1B20	No motor detection current level	No Motor Level	1-100(%)	5	O/A	O	I	p.274
33	0h1B21	No motor detection delay	No Motor Time	0.1-10.0(s)	3.0	O/A	O	I	p.274
34	0h1B22	Motion selection after detecting by the motor overheat detection sensor	Thermal-T Sel	0 None 1 Free-Run 2 Dec	0:None	O/A	O	I/P	p.252
35	0h1B23	Motor overheat detection sensor input selection	Thermal-T Src	0 None 1 V1 3 V2	0:None	O/A	O	I/P	p.252
36	0h1B24	Motor overheat detection sensor fault	Thermal-T Lev	0.0~100.0(%)	50.0&	O/A	O	I/P	p.252

Code	Comm. Address	Name	LCD Display	Setting Range	Initial Value	Property*	V/F	SL	Ref.
		level							
37	0h1B25	Motor overheat detection sensor fault area	Thermal-T Area	0 Low 1 High	0:Low	O/A	O	I/P	p.252
38	0h1B26	Motor overheat detection sensor input amount display	Thermal Monitor	0.00~100.00(%)	-	O/A	O	I/P	p.252
40	0h1B28	Electronic thermal fault selection	ETH Trip Sel	0 None 1 Free-Run 2 Dec	0:None	O/A	O	I/P	p.252
41	0h1B29	Motor cooling fan type	Motor Cooling	0 Self-cool 1 Forced-cool	0:Self-cool	O/A	O	I/P	p.252
42	0h1B2A	Electronic thermal 1 minute rating	ETH 1min	120-200(%)	150	O/A	O	I/P	p.252
43	0h1B2B	Electronic thermal continuous rating	ETH Cont	50-150(%)	120	O/A	O	I/P	p.252
45	0h1B2D	BX trip mode	BX Mode	0 Free-Run 1 Dec	0	X/A	O	I/P	-
50	0h1B32	Stall prevention motion and flux braking	Stall Prevent	bit 00000-11111 0000 1 Accelerating (Mode 1) 1000 1 Accelerating (Mode 2) 0001 0 At constant speed (Mode 1)	0 0000	X/A	O	X	p.258

Code	Comm. Address	Name	LCD Display	Setting Range		Initial Value	Property*	V/F	SL	Ref.
				10010	At constant speed (Mode 2)					
				#0100	At deceleration					
				#1000	FluxBraking					
51	0h1B33	Stall frequency1	Stall Freq 1	Start frequency-Stall frequency2(Hz)		60.00	O/A	O	X	p.258
52	0h1B34	Stall level1	Stall Level 1	30-250(%)		180	X/A	O	X	p.258
53	0h1B35	Stall frequency2	Stall Freq 2	Stall frequency1-Stall frequency3(Hz)		60.00	O/A	O	X	p.258
54	0h1B36	Stall level2	Stall Level 2	30-250(%)		180	X/A	O	X	p.258
55	0h1B37	Stall frequency3	Stall Freq 3	Stall frequency2-Stall frequency4(Hz)		60.00	O/A	O	X	p.258
56	0h1B38	Stall level3	Stall Level 3	30-250(%)		180	X/A	O	X	p.258
57	0h1B39	Stall frequency4	Stall Freq 4	Stall frequency3-Maximum frequency(Hz)		60.00	O/A	O	X	p.258
58	0h1B3A	Stall level4	Stall Level 4	30-250(%)		180	X/A	O	X	p.258
59	0h1B3B	Flux braking gain	Flux Brake Kp	0 ~ 150[%]		0	O/A	O	I	-
66	0h1B42	DB resistor warning level	DB Warn %ED	0-30(%)		0	O/A	O	I/P	p.267
73	0h1B22	Speed deviation trip	Speed Dev Trip	0	No	0:No	O/A	O	I/P	
				1	Yes					
74[65]	0h1B23	Speed deviation band	Speed Dev Band	1 ~ 20		5	O/A	O	I/P	
75[65]	0h1B24	Speed deviation time	Speed Dev Time	0 ~ 120		60	O/A	O	I/P	
79	0h1B4F	Cooling fan fault selection	FAN Trip Mode	0	Trip	1:Warning	O/A	O	I/P	p.270
				1	Warning					

[65] Displayed when Pr.73 is set to 1(YES)

Code	Comm. Address	Name	LCD Display	Setting Range	Initial Value	Property*	V/F	SL	Ref.
80	0h1B50	Motion selection at option trip	Opt Trip Mode	0 None 1 Free-Run 2 Dec	1:Free-Run	O/A	O	I/P	p.273
81	0h1B51	Low voltage fault decision delay time	LVT Delay	0.0-60.0(s)	0.0	X/A	O	I/P	p.271
82	0h1B52	LV2 Selection	LV2 Enable	Bit 00-11 00 No 01 LV2, history X 10 No 11 LV2, history O	00	X/A	O	I/P	p.274
86	0h1B56	Accumulated percent of fan usage	Fan Time Perc	0.0~100.0[%]	0.0	-/A	O	I/P	-
87	0h1B57	Fan exchange warning level	Fan Exchange level	0.0~100.0[%]	90.0	O/A	O	I/P	-
88[65]	0h1B58	Fan reset time	Fan Time Rst	0 No 1 Yes	0	X/7	O	I/P	-
89	0h1B59	FAN Status	FAN state	Bit 00~10 00 - 01 FAN Exchang	0	-/A	O	I/P	-
90[65]	0h1B5A	Warning information	-	-	-	-/7	O	I/P	-
91[65]	0h1B5B	Fault history 1	-	-	-	-/7	O	I/P	-
92[65]	0h1B5C	Fault history 2	-	-	-	-/7	O	I/P	-
93[65]	0h1B5D	Fault history 3	-	-	-	-/7	O	O	-
94[65]	0h1B5E	Fault history 4	-	-	-	-/7	O	O	-
95[65]	0h1B5F	Fault history 5	-	-	-	-/7	O	O	-
96[65]	0h1B60	Fault history deletion	-	0 No 1 Yes	0:No	-/7	O	O	-

8.11 2nd Motor Function group (PAR→M2)

The 2nd Motor function group will be displayed if any of In.65-71 are set to 26 (2nd MOTOR). In the following table, the data shaded in grey will be displayed when a related code has been selected.

SL: Sensorless vector control (dr.09) , I – IM Sensorless, P – PM Sensorless
*__O/X__: Write-enabled during operation, **7/L/A**: Keypad/LCD keypad/Common

Code	Comm. Address	Name	LCD Display	Setting Range	Initial Value	Property *	V/F	SL	Ref.
00	-	Jump Code	Jump Code	1-99	14	O/A	O	I	p.71
04	0h1C04	Acceleration time	M2-Acc Time	0.0-600.0(s)	20.0	O/A	O	I	p.220
05	0h1C05	Deceleration time	M2-Dec Time	0.0-600.0(s)	30.0	O/A	O	I	p.220
06	0h1C06	Motor capacity	M2-Capacity	0 0.2 kW 1 0.4 kW 2 0.75 kW 3 1.1 kW 4 1.5 kW 5 2.2 kW 6 3.0 kW 7 3.7 kW 8 4.0 kW 9 5.5 kW 10 7.5 kW 11 11.0 kW 12 15.0 kW 13 18.5 kW 14 22.0 kW 15 30.0 kW 16 37.0 kW 17 45.0 kW 18 55.0 kW 19 75.0 kW 20 90.0 kW	-	X/A	O	I	p.220
07	0h1C07	Base frequency	M2-Base Freq	30.00-400.00(Hz)	60.00	X/A	O	I	p.220
08	0h1C08	Control mode	M2-Ctrl Mode	0 V/F 2 Slip Compen 4 IM Sensorless 6 PM Sensorless	0:V/F	X/A	O	I	p.220
10	0h1C0A	Number of motor poles	M2-Pole Num	2-48	Dependent	X/A	O	I	p.220

Code	Comm. Address	Name	LCD Display	Setting Range	Initial Value	Property *	V/F	SL	Ref.
11	0h1C0B	Rated slip speed	M2-Rated Slip	0-3000(rpm)	on motor settings	X/A	O	I	p.220
12	0h1C0C	Motor rated current	M2-Rated Curr	1.0-1000.0(A)		X/A	O	I	p.220
13	0h1C0D	Motor no-load current	M2-Noload Curr	0.5-1000.0(A)		X/A	O	I	p.220
14	0h1C0E	Motor rated voltage	M2-Rated Volt	170-480(V)		X/A	O	I	p.220
15	0h1C0F	Motor efficiency	M2-Efficiency	64-100(%)		X/A	O	I	p.220
16	0h1C10	Load inertia rate	M2-Inertia Rt	0-8		X/A	O	I	p.220
17	-	Stator resistance	M2-Rs	Dependent on motor settings		X/A	O	I	p.220
18	-	Leakage inductance	M2-Lsigma			X/A	O	I	p.220
19	-	Stator inductance	M2-Ls			X/A	O	I	p.220
20[66]	-	Rotor time constant	M2-Tr	25-5000(ms)		X/A	O	I	p.220
25	0h1C19	V/F pattern	M2-V/F Patt	0 Linear 1 Square 2 User V/F	0: Linear	X/A	O	I	p.220
26	0h1C1A	Forward Torque boost	M2-Fwd Boost	0.0-15.0(%)	2.0	X/A	O	I	p.220
27	0h1C1B	Reverse Torque boost	M2-Rev Boost	0.0-15.0(%)		X/A	O	I	p.220
28	0h1C1C	Stall prevention level	M2-Stall Lev	30-150(%)	150	X/A	O	I	p.220
29	0h1C1D	Electronic thermal 1 minute rating	M2-ETH 1min	100-200(%)	150	X/A	O	I	p.220
30	0h1C1E	Electronic thermal continuous rating	M2-ETH Cont	50-150(%)	100	X/A	O	I	p.220
40	0h1C28	Rotation count speed gain	Load Spd Gain	0~6000.0[%]	100.0	O/A	O	I	-

Code	Comm. Address	Name	LCD Display	Setting Range		Initial Value	Property *	V/F	SL	Ref.
41	0h1C29	Rotation count speed scale	Load Spd Scale	0	x 1	0: x 1	O/A	O	I	-
				1	x 0.1					
				2	x 0.01					
				3	x 0.001					
				4	x 0.0001					
42	0h1C2A	Rotation count speed unit	Load Spd Unit	0	Rpm	0: rpm	O/A	O	I	-
				1	mpm					

8.12 User Sequence group (US)

This group appears when AP.02 is set to 1 (Yes). The parameter cannot be changed while the user sequence is running.

SL: Sensorless vector control function (dr.09) , I – IM Sensorless, P – PM Sensorless
*__O__/__X__: Write-enabled during operation, __7__/__L__/__A__: keypad/LCD keypad/common

Code	Comm. Address	Name	LCD Display	Setting Range		Initial Value	Property*	V/F	SL	Ref.
00	-	Jump code	Jump Code	1-99		31	O/A	O	I/P	p.71
01	0h1D01	User sequence operation command	User Seq Con	0	Stop	0:Stop	X/A	O	I/P	p.148
				1	Run					
				2	Digital In Run					
02	0h1D02	User sequence operation loop time	US Loop Time	0	0.01s	1:0.02 s	X/A	O	I/P	p.148
				1	0.02s					
				2	0.05s					
				3	0.1s					
				4	0.5s					
				5	1s					
11	0h1D0B	Output address link1	Link UserOut1	0-0xFFFF		0	X/A	O	I/P	p.148
12	0h1D0C	Output address link2	Link UserOut2	0-0xFFFF		0	X/A	O	I/P	p.148
13	0h1D0D	Output address link3	Link UserOut3	0-0xFFFF		0	X/A	O	I/P	p.148
14	0h1D0E	Output address link4	Link UserOut4	0-0xFFFF		0	X/A	O	I/P	p.148
15	0h1D0F	Output address link5	Link UserOut5	0-0xFFFF		0	X/A	O	I/P	p.148

Code	Comm. Address	Name	LCD Display	Setting Range	Initial Value	Property*	V/F	SL	Ref.
16	0h1D10	Output address link6	Link UserOut6	0-0xFFFF	0	X/A	O	I/P	p.148
17	0h1D11	Output address link7	Link UserOut7	0-0xFFFF	0	X/A	O	I/P	p.148
18	0h1D12	Output address link8	Link UserOut8	0-0xFFFF	0	X/A	O	I/P	p.148
19	0h1D13	Output address link9	Link UserOut9	0-0xFFFF	0	X/A	O	I/P	p.148
20	0h1D14	Output address link10	Link UserOut10	0-0xFFFF	0	X/A	O	I/P	p.148
21	0h1D15	Output address link11	Link UserOut11	0-0xFFFF	0	X/A	O	I/P	p.148
22	0h1D16	Output address link12	Link UserOut12	0-0xFFFF	0	X/A	O	I/P	p.148
23	0h1D17	Output address link13	Link UserOut13	0-0xFFFF	0	X/A	O	I/P	p.148
24	0h1D18	Output address link14	Link UserOut14	0-0xFFFF	0	X/A	O	I/P	p.148
25	0h1D19	Output address link15	Link UserOut15	0-0xFFFF	0	X/A	O	I/P	p.148
26	0h1D1A	Output address link16	Link UserOut16	0-0xFFFF	0	X/A	O	I/P	p.148
27	0h1D1B	Output address link17	Link UserOut17	0-0xFFFF	0	X/A	O	I/P	p.148
28	0h1D1C	Output address link18	Link UserOut18	0-0xFFFF	0	X/A	O	I/P	p.148
31	0h1D1F	Input constant setting1	Void Para1	-9999-9999	0	X/A	O	I/P	p.148
32	0h1D20	Input constant setting2	Void Para2	-9999-9999	0	X/A	O	I/P	p.148
33	0h1D21	Input constant setting3	Void Para3	-9999-9999	0	X/A	O	I/P	p.148
34	0h1D22	Input constant setting4	Void Para4	-9999-9999	0	X/A	O	I/P	p.148
35	0h1D23	Input constant setting5	Void Para5	-9999-9999	0	X/A	O	I/P	p.148
36	0h1D24	Input constant setting6	Void Para6	-9999-9999	0	X/A	O	I/P	p.148
37	0h1D25	Input constant setting7	Void Para7	-9999-9999	0	X/A	O	I/P	p.148
38	0h1D26	Input constant setting8	Void Para8	-9999-9999	0	X/A	O	I/P	p.148
39	0h1D27	Input constant setting9	Void Para9	-9999-9999	0	X/A	O	I/P	p.148
40	0h1D28	Input constant setting10	Void Para10	-9999-9999	0	X/A	O	I/P	p.148
41	0h1D29	Input constant	Void Para11	-9999-9999	0	X/A	O	I/P	p.148

Code	Comm. Address	Name	LCD Display	Setting Range	Initial Value	Property*	V/F	SL	Ref.
		setting11							
42	0h1D2A	Input constant setting12	Void Para12	-9999-9999	0	X/A	O	I/P	p.148
43	0h1D2B	Input constant setting13	Void Para13	-9999-9999	0	X/A	O	I/P	p.148
44	0h1D2C	Input constant setting14	Void Para14	-9999-9999	0	X/A	O	I/P	p.148
45	0h1D2D	Input constant setting15	Void Para15	-9999-9999	0	X/A	O	I/P	p.148
46	0h1D2E	Input constant setting16	Void Para16	-9999-9999	0	X/A	O	I/P	p.148
47	0h1D2F	Input constant setting17	Void Para17	-9999-9999	0	X/A	O	I/P	p.148
48	0h1D30	Input constant setting18	Void Para18	-9999-9999	0	X/A	O	I/P	p.148
49	0h1D31	Input constant setting19	Void Para19	-9999-9999	0	X/A	O	I/P	p.148
50	0h1D32	Input constant setting20	Void Para20	-9999-9999	0	X/A	O	I/P	p.148
51	0h1D33	Input constant setting21	Void Para21	-9999-9999	0	X/A	O	I/P	p.148
52	0h1D34	Input constant setting22	Void Para22	-9999-9999	0	X/A	O	I/P	p.148
53	0h1D35	Input constant setting23	Void Para23	-9999-9999	0	X/A	O	I/P	p.148
54	0h1D36	Input constant setting24	Void Para24	-9999-9999	0	X/A	O	I/P	p.148
55	0h1D37	Input constant setting25	Void Para25	-9999-9999	0	X/A	O	I/P	p.148
56	0h1D38	Input constant setting26	Void Para26	-9999-9999	0	X/A	O	I/P	p.148
57	0h1D39	Input constant setting27	Void Para27	-9999-9999	0	X/A	O	I/P	p.148
58	0h1D3A	Input constant setting28	Void Para28	-9999-9999	0	X/A	O	I/P	p.148
59	0h1D3B	Input constant setting29	Void Para29	-9999-9999	0	X/A	O	I/P	p.148
60	0h1D3C	Input constant setting30	Void Para30	-9999-9999	0	X/A	O	I/P	p.148

8.13 User Sequence Function group(UF)

This group appears when AP.02 is set to 1 (Yes). The parameter cannot be changed while

the user sequence is running.

SL: Sensorless vector control function (dr.09) , I – IM Sensorless, P – PM Sensorless
*__O__/__X__: Write-enabled during operation, __7__/__L__/__A__: keypad/LCD keypad/common

Code	Comm. Address	Name	LCD Display	Setting Range		Initial Value	Property *	V/F	SL	Ref.
00	-	Jump code	Jump Code	1-99		41	O/A	O	I/P	p.71
01	0h1E01	User function1	User Func1	0	NOP	0:NOP	X/A	O	I/P	p.148
				1	ADD					
				2	SUB					
				3	ADDSUB					
				4	MIN					
				5	MAX					
				6	ABS					
				7	NEGATE					
				8	MPYDIV					
				9	REMAINDER					
				10	COMPARE-GT					
				11	COMPARE-GEQ					
				12	COMPARE-EQUAL					
				13	COMPARE-NEQUAL					
				14	TIMER					
				15	LIMIT					
				16	AND					
				17	OR					
				18	XOR					
				19	ANDOR					
				20	SWITCH					
				21	BITTEST					
				22	BITSET					
				23	BITCLEAR					
				24	LOWPASSFILTER					
				25	PI_CONTORL					
				26	PI_PROCESS					
				27	UPCOUNT					
				28	DOWNCOUNT					

Code	Comm. Address	Name	LCD Display	Setting Range	Initial Value	Property *	V/F	SL	Ref.
02	0h1E02	User function input1-A	User Input1-A	0-0xFFFF	0	X/A	O	I/P	p.148
03	0h1E03	User function input1-B	User Input1-B	0-0xFFFF	0	X/A	O	I/P	p.148
04	0h1E04	User function input1-C	User Input1-C	0-0xFFFF	0	X/A	O	I/P	p.148
05	0h1E05	User function output1	User Output1	-32767-32767	0	-/A	O	I/P	p.148
06	0h1E06	User function 2	User Func2	0 NOP 1 ADD 2 SUB 3 ADDSUB 4 MIN 5 MAX 6 ABS 7 NEGATE 8 MPYDIV 9 REMAINDER 10 COMPARE-GT 11 COMPARE-GEQ 12 COMPARE-EQUAL 13 COMPARE-NEQUAL 14 TIMER 15 LIMIT 16 AND 17 OR 18 XOR 19 ANDOR 20 SWITCH 21 BITTEST 22 BITSET 23 BITCLEAR 24 LOWPASSFILTER	0:NOP	X/A	O	I/P	p.148

Code	Comm. Address	Name	LCD Display	Setting Range		Initial Value	Property *	V/F	SL	Ref.
				25	PI_CONTORL					
				26	PI_PROCESS					
				27	UPCOUNT					
				28	DOWNCOUNT					
07	0h1E07	User function input2-A	User Input2-A	0-0xFFFF		0	X/A	O	I/P	p.148
08	0h1E08	User function input2-B	User Input2-B	0-0xFFFF		0	X/A	O	I/P	p.148
09	0h1E09	User function input2-C	User Input2-C	0-0xFFFF		0	X/A	O	I/P	p.148
10	0h1E0A	User function output2	User Output2	-32767-32767		0	-/A	O	I/P	p.148
11	0h1E0B	User function3	User Func3	0	NOP	0:NOP	X/A	O	I/P	p.148
				1	ADD					
				2	SUB					
				3	ADDSUB					
				4	MIN					
				5	MAX					
				6	ABS					
				7	NEGATE					
				8	MPYDIV					
				9	REMAINDER					
				10	COMPARE-GT					
				11	COMPARE-GEQ					
				12	COMPARE-EQUAL					
				13	COMPARE-NEQUAL					
				14	TIMER					
				15	LIMIT					
				16	AND					
				17	OR					
				18	XOR					
				19	ANDOR					
				20	SWITCH					
				21	BITTEST					

Code	Comm. Address	Name	LCD Display	Setting Range		Initial Value	Property *	V/F	SL	Ref.
				22	BITSET					
				23	BITCLEAR					
				24	LOWPASSFILTER					
				25	PI_CONTORL					
				26	PI_PROCESS					
				27	UPCOUNT					
				28	DOWNCOUNT					
12	0h1E0C	User function input3-A	User Input3-A	0-0xFFFF		0	X/A	O	I/P	p.148
13	0h1E0D	User function input3-B	User Input3-B	0-0xFFFF		0	X/A	O	I/P	p.148
14	0h1E0E	User function input3-C	User Input3-C	0-0xFFFF		0	X/A	O	I/P	p.148
15	0h1E0F	User function output3	User Output3	-32767-32767		0	-/A	O	I/P	p.148
16	0h1E10	User function4	User Func4	0	NOP	0:NOP	X/A	O	I/P	p.148
				1	ADD					
				2	SUB					
				3	ADDSUB					
				4	MIN					
				5	MAX					
				6	ABS					
				7	NEGATE					
				8	MPYDIV					
				9	REMAINDER					
				10	COMPARE-GT					
				11	COMPARE-GEQ					
				12	COMPARE-EQUAL					
				13	COMPARE-NEQUAL					
				14	TIMER					
				15	LIMIT					
				16	AND					
				17	OR					

Code	Comm. Address	Name	LCD Display	Setting Range		Initial Value	Property *	V/F	SL	Ref.
				18	XOR					
				19	ANDOR					
				20	SWITCH					
				21	BITTEST					
				22	BITSET					
				23	BITCLEAR					
				24	LOWPASSFILTER					
				25	PI_CONTORL					
				26	PI_PROCESS					
				27	UPCOUNT					
				28	DOWNCOUNT					
17	0h1E11	User function input4-A	User Input4-A	0-0xFFFF		0	X/A	O	I/P	p.148
18	0h1E12	User function input4-B	User Input4-B	0-0xFFFF		0	X/A	O	I/P	p.148
19	0h1E13	User function input4-C	User Input4-C	0-0xFFFF		0	X/A	O	I/P	p.148
20	0h1E14	User function output4	User Output4	-32767-32767		0	-/A	O	I/P	p.148
21	0h1E15	User function5	User Func5	0	NOP	0:NOP	X/A	O	I/P	p.148
				1	ADD					
				2	SUB					
				3	ADDSUB					
				4	MIN					
				5	MAX					
				6	ABS					
				7	NEGATE					
				8	MPYDIV					
				9	REMAINDER					
				10	COMPARE-GT					
				11	COMPARE-GEQ					
				12	COMPARE-EQUAL					
				13	COMPARE-NEQUAL					
				14	TIMER					

Code	Comm. Address	Name	LCD Display	Setting Range		Initial Value	Property *	V/F	SL	Ref.
				15	LIMIT					
				16	AND					
				17	OR					
				18	XOR					
				19	ANDOR					
				20	SWITCH					
				21	BITTEST					
				22	BITSET					
				23	BITCLEAR					
				24	LOWPASSFILTER					
				25	PI_CONTORL					
				26	PI_PROCESS					
				27	UPCOUNT					
				28	DOWNCOUNT					
22	0h1E16	User function input5-A	User Input5-A	0-0xFFFF		0	X/A	O	I/P	p.148
23	0h1E17	User function input5-B	User Input5-B	0-0xFFFF		0	X/A	O	I/P	p.148
24	0h1E18	User function input5-C	User Input5-C	0-0xFFFF		0	X/A	O	I/P	p.148
25	0h1E19	User function output5	User Output5	-32767-32767		0	-/A	O	I/P	p.148
26	0h1E1A	User function6	User Func6	0	NOP	0:NOP	X/A	O	I/P	p.148
				1	ADD					
				2	SUB					
				3	ADDSUB					
				4	MIN					
				5	MAX					
				6	ABS					
				7	NEGATE					
				8	MPYDIV					
				9	REMAINDER					
				10	COMPARE-GT					
				11	COMPARE-GEQ					
				12	COMPARE-					

Code	Comm. Address	Name	LCD Display	Setting Range		Initial Value	Property *	V/F	SL	Ref.
					EQUAL					
				13	COMPARE-NEQUAL					
				14	TIMER					
				15	LIMIT					
				16	AND					
				17	OR					
				18	XOR					
				19	ANDOR					
				20	SWITCH					
				21	BITTEST					
				22	BITSET					
				23	BITCLEAR					
				24	LOWPASSFILTER					
				25	PI_CONTORL					
				26	PI_PROCESS					
				27	UPCOUNT					
				28	DOWNCOUNT					
27	0h1E1B	User function input6-A	User Input6-A	0-0xFFFF		0	X/A	O	I/P	p.148
28	0h1E1C	User function input6-B	User Input6-B	0-0xFFFF		0	X/A	O	I/P	p.148
29	0h1E1D	User function input6-C	User Input6-C	0-0xFFFF		0	X/A	O	I/P	p.148
30	0h1E1E	User function output6	User Output6	-32767-32767		0	-/A	O	I/P	p.148
31	0h1E1F	User function7	User Func7	0	NOP	0:NOP	X/A	O	I/P	p.148
				1	ADD					
				2	SUB					
				3	ADDSUB					
				4	MIN					
				5	MAX					
				6	ABS					
				7	NEGATE					
				8	MPYDIV					

Code	Comm. Address	Name	LCD Display	Setting Range		Initial Value	Property *	V/F	SL	Ref.
				9	REMAINDER					
				10	COMPARE-GT					
				11	COMPARE-GEQ					
				12	COMPARE-EQUAL					
				13	COMPARE-NEQUAL					
				14	TIMER					
				15	LIMIT					
				16	AND					
				17	OR					
				18	XOR					
				19	ANDOR					
				20	SWITCH					
				21	BITTEST					
				22	BITSET					
				23	BITCLEAR					
				24	LOWPASSFILTER					
				25	PI_CONTORL					
				26	PI_PROCESS					
				27	UPCOUNT					
				28	DOWNCOUNT					
32	0h1E20	User function input7-A	User Input7-A	0-0xFFFF		0	X/A	O	I/P	p.148
33	0h1E21	User function input7-B	User Input7-B	0-0xFFFF		0	X/A	O	I/P	p.148
34	0h1E22	User function input7-C	User Input7-C	0-0xFFFF		0	X/A	O	I/P	p.148
35	0h1E23	User function output7	User Output7	-32767-32767		0	-/A	O	I/P	p.148
36	0h1E24	User function8	User Func8	0	NOP	0:NOP	X/A	O	I/P	p.148
				1	ADD					
				2	SUB					
				3	ADDSUB					
				4	MIN					
				5	MAX					

Code	Comm. Address	Name	LCD Display	Setting Range		Initial Value	Property *	V/F	SL	Ref.
				6	ABS					
				7	NEGATE					
				8	MPYDIV					
				9	REMAINDER					
				10	COMPARE-GT					
				11	COMPARE-GEQ					
				12	COMPARE-EQUAL					
				13	COMPARE-NEQUAL					
				14	TIMER					
				15	LIMIT					
				16	AND					
				17	OR					
				18	XOR					
				19	ANDOR					
				20	SWITCH					
				21	BITTEST					
				22	BITSET					
				23	BITCLEAR					
				24	LOWPASSFILTER					
				25	PI_CONTORL					
				26	PI_PROCESS					
				27	UPCOUNT					
				28	DOWNCOUNT					
37	0h1E25	User function input8-A	User Input8-A	0-0xFFFF		0	X/A	O	I/P	p.148
38	0h1E26	User function input8-B	User Input8-B	0-0xFFFF		0	X/A	O	I/P	p.148
39	0h1E27	User function input8-C	User Input8-C	0-0xFFFF		0	X/A	O	I/P	p.148
40	0h1E28	User function output8	User Output8	-32767-32767		0	-/A	O	I/P	p.148
41	0h1E29	User function9	User Func9	0	NOP	0:NOP	X/A	O	I/P	p.148
				1	ADD					
				2	SUB					

Code	Comm. Address	Name	LCD Display	Setting Range		Initial Value	Property *	V/F	SL	Ref.
				3	ADDSUB					
				4	MIN					
				5	MAX					
				6	ABS					
				7	NEGATE					
				8	MPYDIV					
				9	REMAINDER					
				10	COMPARE-GT					
				11	COMPARE-GEQ					
				12	COMPARE-EQUAL					
				13	COMPARE-NEQUAL					
				14	TIMER					
				15	LIMIT					
				16	AND					
				17	OR					
				18	XOR					
				19	ANDOR					
				20	SWITCH					
				21	BITTEST					
				22	BITSET					
				23	BITCLEAR					
				24	LOWPASSFILTER					
				25	PI_CONTORL					
				26	PI_PROCESS					
				27	UPCOUNT					
				28	DOWNCOUNT					
42	0h1E2A	User function input9-A	User Input9-A	0-0xFFFF		0	X/A	O	I/P	p.148
43	0h1E2B	User function input9-B	User Input9-B	0-0xFFFF		0	X/A	O	I/P	p.148
44	0h1E2C	User function input9-C	User Input9-C	0-0xFFFF		0	X/A	O	I/P	p.148
45	0h1E2D	User function output9	User Output9	-32767-32767		0	-/A	O	I/P	p.148

Code	Comm. Address	Name	LCD Display	Setting Range		Initial Value	Property *	V/F	SL	Ref.
46	0h1E2E	User function10	User Func10	0	NOP	0:NOP	X/A	O	I/P	p.148
				1	ADD					
				2	SUB					
				3	ADDSUB					
				4	MIN					
				5	MAX					
				6	ABS					
				7	NEGATE					
				8	MPYDIV					
				9	REMAINDER					
				10	COMPARE-GT					
				11	COMPARE-GEQ					
				12	COMPARE-EQUAL					
				13	COMPARE-NEQUAL					
				14	TIMER					
				15	LIMIT					
				16	AND					
				17	OR					
				18	XOR					
				19	ANDOR					
				20	SWITCH					
				21	BITTEST					
				22	BITSET					
				23	BITCLEAR					
				24	LOWPASSFILTER					
				25	PI_CONTORL					
				26	PI_PROCESS					
				27	UPCOUNT					
				28	DOWNCOUNT					
47	0h1E2F	User function input10-A	User Input10-A	0-0xFFFF		0	X/A	O	I/P	p.148
48	0h1E30	User function input10-B	User Input10-B	0-0xFFFF		0	X/A	O	I/P	p.148

Code	Comm. Address	Name	LCD Display	Setting Range		Initial Value	Property *	V/F	SL	Ref.
49	0h1E31	User function input10-C	User Input10-C	0-0xFFFF		0	X/A	O	I/P	p.148
50	0h1E32	User function output10	User Output 10	-32767-32767		0	-/A	O	I/P	p.148
51	0h1E33	User function11	User Func11	0	NOP	0:NOP	X/A	O	I/P	p.148
				1	ADD					
				2	SUB					
				3	ADDSUB					
				4	MIN					
				5	MAX					
				6	ABS					
				7	NEGATE					
				8	MPYDIV					
				9	REMAINDER					
				10	COMPARE-GT					
				11	COMPARE-GEQ					
				12	COMPARE-EQUAL					
				13	COMPARE-NEQUAL					
				14	TIMER					
				15	LIMIT					
				16	AND					
				17	OR					
				18	XOR					
				19	ANDOR					
				20	SWITCH					
				21	BITTEST					
				22	BITSET					
				23	BITCLEAR					
				24	LOWPASSFILTER					
				25	PI_CONTORL					
				26	PI_PROCESS					
				27	UPCOUNT					
				28	DOWNCOUNT					

Code	Comm. Address	Name	LCD Display	Setting Range	Initial Value	Property *	V/F	SL	Ref.
52	0h1E34	User function input11-A	User Input11-A	0-0xFFFF	0	X/A	O	I/P	p.148
53	0h1E35	User function input11-B	User Input11-B	0-0xFFFF	0	X/A	O	I/P	p.148
54	0h1E36	User function input11-C	User Input11-C	0-0xFFFF	0	X/A	O	I/P	p.148
55	0h1E37	User function output11	User Output 11	-32767-32767	0	-/A	O	I/P	p.148
56	0h1E38	User function12	User Func12	0 NOP 1 ADD 2 SUB 3 ADDSUB 4 MIN 5 MAX 6 ABS 7 NEGATE 8 MPYDIV 9 REMAINDER 10 COMPARE-GT 11 COMPARE-GEQ 12 COMPARE-EQUAL 13 COMPARE-NEQUAL 14 TIMER 15 LIMIT 16 AND 17 OR 18 XOR 19 ANDOR 20 SWITCH 21 BITTEST 22 BITSET 23 BITCLEAR 24 LOWPASSFILTE	0:NOP	X/A	O	I/P	p.148

Code	Comm. Address	Name	LCD Display	Setting Range		Initial Value	Property *	V/F	SL	Ref.
					R					
				25	PI_CONTORL					
				26	PI_PROCESS					
				27	UPCOUNT					
				28	DOWNCOUNT					
57	0h1E39	User function input12-A	User Input12-A	0-0xFFFF		0	X/A	O	I/P	p.148
58	0h1E3A	User function input12-B	User Input12-B	0-0xFFFF		0	X/A	O	I/P	p.148
59	0h1E3B	User function input12-C	User Input12-C	0-0xFFFF		0	X/A	O	I/P	p.148
60	0h1E3C	User function output12	User Output 12	-32767-32767		0	-/A	O	I/P	p.148
61	0h1E3D	User function13	User Func13	0	NOP	0:NOP	X/A	O	I/P	p.148
				1	ADD					
				2	SUB					
				3	ADDSUB					
				4	MIN					
				5	MAX					
				6	ABS					
				7	NEGATE					
				8	MPYDIV					
				9	REMAINDER					
				10	COMPARE-GT					
				11	COMPARE-GEQ					
				12	COMPARE-EQUAL					
				13	COMPARE-NEQUAL					
				14	TIMER					
				15	LIMIT					
				16	AND					
				17	OR					
				18	XOR					
				19	ANDOR					

Code	Comm. Address	Name	LCD Display	Setting Range		Initial Value	Property *	V/F	SL	Ref.
				20	SWITCH					
				21	BITTEST					
				22	BITSET					
				23	BITCLEAR					
				24	LOWPASSFILTER					
				25	PI_CONTORL					
				26	PI_PROCESS					
				27	UPCOUNT					
				28	DOWNCOUNT					
62	0h1E3E	User function input13-A	User Input13-A	0-0xFFFF		0	X/A	O	I/P	p.148
63	0h1E3F	User function input13-B	User Input13-B	0-0xFFFF		0	X/A	O	I/P	p.148
64	0h1E40	User function input13-C	User Input13-C	0-0xFFFF		0	X/A	O	I/P	p.148
65	0h1E41	User function output13	User Output 13	-32767-32767		0	-/A	O	I/P	p.148
66	0h1E42	User function14	User Func14	0	NOP	0:NOP	X/A	O	I/P	p.148
				1	ADD					
				2	SUB					
				3	ADDSUB					
				4	MIN					
				5	MAX					
				6	ABS					
				7	NEGATE					
				8	MPYDIV					
				9	REMAINDER					
				10	COMPARE-GT					
				11	COMPARE-GEQ					
				12	COMPARE-EQUAL					
				13	COMPARE-NEQUAL					
				14	TIMER					

Code	Comm. Address	Name	LCD Display	Setting Range		Initial Value	Property *	V/F	SL	Ref.
				15	LIMIT					
				16	AND					
				17	OR					
				18	XOR					
				19	ANDOR					
				20	SWITCH					
				21	BITTEST					
				22	BITSET					
				23	BITCLEAR					
				24	LOWPASSFILTER					
				25	PI_CONTORL					
				26	PI_PROCESS					
				27	UPCOUNT					
				28	DOWNCOUNT					
67	0h1E43	User function input14-A	User Input14-A	0-0xFFFF		0	X/A	O	I/P	p.148
68	0h1E44	User function input14-B	User Input14-B	0-0xFFFF		0	X/A	O	I/P	p.148
69	0h1E45	User function input14-C	User Input14-C	0-0xFFFF		0	X/A	O	I/P	p.148
70	0h1E46	User function output14	User Output 14	-32767-32767		0	-/A	O	I/P	p.148
71	0h1E47	User function15	User Func15	0	NOP	0:NOP	X/A	O	I/P	p.148
				1	ADD					
				2	SUB					
				3	ADDSUB					
				4	MIN					
				5	MAX					
				6	ABS					
				7	NEGATE					
				8	MPYDIV					
				9	REMAINDER					
				10	COMPARE-GT					

Code	Comm. Address	Name	LCD Display	Setting Range		Initial Value	Property *	V/F	SL	Ref.
				11	COMPARE-GEQ					
				12	COMPARE-EQUAL					
				13	COMPARE-NEQUAL					
				14	TIMER					
				15	LIMIT					
				16	AND					
				17	OR					
				18	XOR					
				19	ANDOR					
				20	SWITCH					
				21	BITTEST					
				22	BITSET					
				23	BITCLEAR					
				24	LOWPASSFILTER					
				25	PI_CONTORL					
				26	PI_PROCESS					
				27	UPCOUNT					
				28	DOWNCOUNT					
72	0h1E48	User function input15-A	User Input15-A	0-0xFFFF		0	X/A	O	I/P	p.148
73	0h1E49	User function input15-B	User Input15-B	0-0xFFFF		0	X/A	O	I/P	p.148
74	0h1E4A	User function input15-C	User Input15-C	0-0xFFFF		0	X/A	O	I/P	p.148
75	0h1E4B	User function output15	User Output 15	-32767-32767		0	-/A	O	I/P	p.148
76	0h1E4C	User function 16	User Func16	0	NOP	0:NOP	X/A	O	I/P	p.148
				1	ADD					
				2	SUB					
				3	ADDSUB					
				4	MIN					
				5	MAX					

Code	Comm. Address	Name	LCD Display	Setting Range		Initial Value	Property *	V/F	SL	Ref.
				6	ABS					
				7	NEGATE					
				8	MPYDIV					
				9	REMAINDER					
				10	COMPARE-GT					
				11	COMPARE-GEQ					
				12	COMPARE-EQUAL					
				13	COMPARE-NEQUAL					
				14	TIMER					
				15	LIMIT					
				16	AND					
				17	OR					
				18	XOR					
				19	ANDOR					
				20	SWITCH					
				21	BITTEST					
				22	BITSET					
				23	BITCLEAR					
				24	LOWPASSFILTER					
				25	PI_CONTORL					
				26	PI_PROCESS					
				27	UPCOUNT					
				28	DOWNCOUNT					
77	0h1E4D	User function input16-A	User Input16-A	0-0xFFFF		0	X/A	O	I/P	p.148
78	0h1E4E	User function input16-B	User Input16-B	0-0xFFFF		0	X/A	O	I/P	p.148
79	0h1E4F	User function input16-C	User Input16-C	0-0xFFFF		0	X/A	O	I/P	p.148
80	0h1E50	User function output16	User Output 16	-32767-32767		0	-/A	O	I/P	p.148
81	0h1E51	User function 17	User Func17	0	NOP	0:NOP	X/A	O	I/P	p.148
				1	ADD					

Code	Comm. Address	Name	LCD Display	Setting Range		Initial Value	Property *	V/F	SL	Ref.
				2	SUB					
				3	ADDSUB					
				4	MIN					
				5	MAX					
				6	ABS					
				7	NEGATE					
				8	MPYDIV					
				9	REMAINDER					
				10	COMPARE-GT					
				11	COMPARE-GEQ					
				12	COMPARE-EQUAL					
				13	COMPARE-NEQUAL					
				14	TIMER					
				15	LIMIT					
				16	AND					
				17	OR					
				18	XOR					
				19	ANDOR					
				20	SWITCH					
				21	BITTEST					
				22	BITSET					
				23	BITCLEAR					
				24	LOWPASSFILTER					
				25	PI_CONTORL					
				26	PI_PROCESS					
				27	UPCOUNT					
				28	DOWNCOUNT					
82	0h1E52	User function input17-A	User Input17-A	0-0xFFFF		0	X/A	O	I/P	p.148
83	0h1E53	User function input17-B	User Input17-B	0-0xFFFF		0	X/A	O	I/P	p.148
84	0h1E54	User function input17-C	User Input17-C	0-0xFFFF		0	X/A	O	I/P	p.148

Code	Comm. Address	Name	LCD Display	Setting Range		Initial Value	Property *	V/F	SL	Ref.
85	0h1E55	User function output17	User Output 17	-32767-32767		0	-/A	O	I/P	p.148
86	0h1E56	User function 18	User Func18	0	NOP	0:NOP	X/A	O	I/P	p.148
				1	ADD					
				2	SUB					
				3	ADDSUB					
				4	MIN					
				5	MAX					
				6	ABS					
				7	NEGATE					
				8	MPYDIV					
				9	REMAINDER					
				10	COMPARE-GT					
				11	COMPARE-GEQ					
				12	COMPARE-EQUAL					
				13	COMPARE-NEQUAL					
				14	TIMER					
				15	LIMIT					
				16	AND					
				17	OR					
				18	XOR					
				19	ANDOR					
				20	SWITCH					
				21	BITTEST					
				22	BITSET					
				23	BITCLEAR					
				24	LOWPASSFILTER					
				25	PI_CONTORL					
				26	PI_PROCESS					
				27	UPCOUNT					
				28	DOWNCOUNT					
87	0h1E57	User function input18-A	User Input18-	0-0xFFFF		0	X/A	O	I/P	p.148

Code	Comm. Address	Name	LCD Display	Setting Range	Initial Value	Property *	V/F	SL	Ref.
			A						
88	0h1E58	User function input18-B	User Input18-B	0-0xFFFF	0	X/A	O	I/P	p.148
89	0h1E59	User function input18-C	User Input18-C	0-0xFFFF	0	X/A	O	I/P	p.148
90	0h1E5A	User function output18	User Output 18	-32767-32767	0	-/A	O	I/P	p.148

8.14 Groups for LCD Keypad Only

8.14.1 Trip Mode (TRP Last-x)

Code	Name	LCD Display	Setting Range	Initial Value	Ref.
00	Trip type display	Trip Name(x)	-	-	-
01	Frequency reference at trip	Output Freq	-	-	-
02	Output current at trip	Output Current	-	-	-
03	Acceleration/Deceleration state at trip	Inverter State	-	-	-
04	DC section state	DCLink Voltage	-	-	-
05	NTC temperature	Temperature	-	-	-
06	Input terminal state	DI Status	-	0000 0000	-
07	Output terminal state	DO Status	-	000	-
08	Trip time after Power on	Trip On Time	-	0/00/00 00:00	-
09	Trip time after operation start	Trip Run Time	-	0/00/00 00:00	-
10	Delete trip history	Trip Delete?	0 No 1 Yes		

8.14.2 Config Mode (CNF)

Code	Name	LCD Display	Setting Range	Initial Value	Ref.
00	Jump code	Jump Code	1-99	42	p.71
01	Keypad language selection	Language Sel	0 : English	0 : English	p.248
02	LCD constrast adjustment	LCD Contrast	-	-	p.231
03	Multi keypad ID	Multi KPD ID	3-99	3	p.147
10	Inverter S/W version	Inv S/W Ver	-	-	p.231
11	LCD keypad S/W	Keypad S/W Ver	-	-	p.231
12	LCD keypad title	KPD Title Ver	-	-	p.231
20	Status window display item	Anytime Para	0 Frequency	0: Frequency	p.248

Code	Name	LCD Display	Setting Range		Initial Value	Ref.
21	Monitor mode display item1	Monitor Line-1	1	Speed	0: Frequency	p.248
22	Monitor mode display item2	Monitor Line-2	2	Output Current	2:Output Current	p.248
23	Monitor mode display item3	Monitor Line-3	3	Output Voltage	3:Output Voltage	p.248
			4	Output Power		
			5	WHour Counter		
			6	DCLink Voltage		
			7	DI State		
			8	DO State		
			9	V1 Monitor(V)		
			10	V1 Monitor(%)		
			13	V2 Monitor(V)		
			14	V2 Monitor(%)		
			15	I2 Monitor(mA)		
			16	I2 Monitor(%)		
			17	PID Output		
			18	PID Ref Value		
			19	PID Fdb Value		
			20	Torque		
			21	Torque Limit		
			23	Speed Limit		
			24	Load Speed		
			25	Temperature		
24	Monitor mode initialization	Mon Mode Init	0	No	0:No	p.248
			1	Yes		
30	Option slot 1 type	Option-1 Type	0	None	0:None	p.231
31	Option slot 2 type	Option-2 Type	6	Ethernet	0:None	p.231
32	Option slot 3 type display	Option-3 Type	9	CANopen	0:None	p.231
40	Parameter initialization	Parameter Init	0	No		p.224
			1	All Grp		
			2	DRV Grp		

Code	Name	LCD Display	Setting Range		Initial Value	Ref.
			3	BAS Grp		
			4	ADV Grp		
			5	CON Grp		
			6	IN Grp		
			7	OUT Grp		
			8	COM Grp		
			9	APP Grp		
			11	APO Grp[67]		
			12	PRT Grp		
			13	M2 Grp		
			14	US Grp		
			15	UF Grp		
41	Display changed Parameter	Changed Para	0	View All	0:View All	p.228
			1	View Changed		
42	Multi key item	Multi Key Sel	0	None	0:None	p.229
			1	JOG Key		
			2	Local/Remote		
			3	UserGrp SelKey		
			4	Multi KPD		
43	Macro function item	Macro Select	0	None	0:None	-
44	Trip history deletion	Erase All Trip	0	No	0:No	p.231
			1	Yes		
45	User registration code deletion	UserGrp AllDel	0	No	0:No	p.229
			1	Yes		
46	Read parameters	Parameter Read	0	No	0:No	p.223
			1	Yes		
47	Write parameters	Parameter Write	0	No	0: No	p.223
			1	Yes		
48	Save parameters	Parameter Save	0	No	0:No	p.223
			1	Yes		
50	Hide parameter mode	View Lock Set	0-9999		Un-locked	p.226
51	Password for hiding parameter mode	View Lock Pw	0-9999		Password	p.226
52	Lock parameter edit	Key Lock Set	0-9999		Un-locked	p.227
53	Password for locking	Key Lock Pw	0-9999		Password	p.227

[67] Supported only Extension I/O(Option)

Code	Name	LCD Display	Setting Range		Initial Value	Ref.
	parameter edit					
60	Additional title update	Add Title Up	0	No	0:No	p.231
			1	Yes		
61	Simple parameter setting	Easy Start On	0	No	1:Yes	p.229
			1	Yes		
62	Power consumption initialization	WHCount Reset	0	No	0:No	p.231
			1	Yes		
70	Accumulated inverter motion time	On-time	00000DAY 00:00		-	p.251
71	Accumulated inverter operation time	Run-time	00000DAY 00:00		-	p.251
72	Accumulated inverter operation time initialization	Time Reset	0	No	0:No	p.251
			1	Yes		
74	Accumulated cooling fan operation time	Fan Time	00000DAY 00:00		-	p.251
75	Reset of accumulated cooling fan operation time	Fan Time Rst	0	No	0:No	p.251
			1	Yes		

Memo

9 Troubleshooting

This chapter explains how to troubleshoot a problem when inverter protective functions, fault trips, warning signals, or a fault occurs. If the inverter does not work normally after following the suggested troubleshooting steps, please contact the LS ELECTRIC customer service center.

9.1 Trips and Warnings

When the inverter detects a fault, it stops the operation (trips) or sends out a warning signal. When a trip or warning occurs, the keypad displays the information briefly. If the LCD keypad is used, detailed information is shown on the LCD display. Users can read the warning message at Pr.90. When more than 2 trips occur at roughly the same time, the keypad (basic keypad with 7-segment display) displays the higher priority fault trip information, while the LCD keypad shows the information for the fault trip that occurred first.

The fault conditions can be categorized as follows:

- Level: When the fault is corrected, the trip or warning signal disappears and the fault is not saved in the fault history.
- Latch: When the fault is corrected and a reset input signal is provided, the trip or warning signal disappears.
- Fatal: When the fault is corrected, the fault trip or warning signal disappears only after the user turns off the inverter, waits until the charge indicator light goes off, and turns the inverter on again. If the the inverter is still in a fault condition after powering it on again, please contact the supplier or the LS ELECTRIC customer service center.

9.1.1 Fault Trips

Protection Functions for Output Current and Input Voltage

Keypad Display	LCD Display	Type	Description
OLt	Over Load	Latch	Displayed when the motor overload trip is activated and the actual load level exceeds the set level. Operates when Pr.20 is set to a value other than 0.
ULt	Under Load	Latch	Displayed when the motor underload trip is activated and the actual load level is less than the set level. Operates when Pr.27 is set to a value other than 0.
OCt	Over Current1	Latch	Displayed when inverter output current exceeds 200% of the rated current.

Keypad Display	LCD Display	Type	Description
	Over Voltage	Latch	Displayed when internal DC circuit voltage exceeds the specified value.
	Low Voltage	Level	Displayed when internal DC circuit voltage is less than the specified value.
	Low Voltage2	Latch	Displayed when internal DC circuit voltage is less than the specified value during inverter operation.
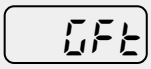	Ground Trip*	Latch	Displayed when a ground fault trip occurs on the output side of the inverter and causes the current to exceed the specified value. The specified value varies depending on inverter capacity.
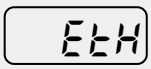	E-Thermal	Latch	Displayed based on inverse time-limit thermal characteristics to prevent motor overheating. Operates when Pr.40 is set to a value other than 0.
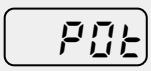	Out Phase Open	Latch	Displayed when a 3-phase inverter output has one or more phases in an open circuit condition. Operates when bit 1 of Pr.05 is set to 1.
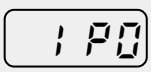	In Phase Open	Latch	Displayed when a 3-phase inverter input has one or more phases in an open circuit condition. Operates only when bit 2 of Pr.05 is set to 1.
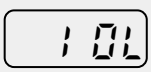	Inverter OLT	Latch	Displayed when the inverter has been protected from overload and resultant overheating, based on inverse time-limit thermal characteristics. Allowable overload rates for the inverter are 150% for 1 min and 200% for 4 sec. Protection is based on inverter rated capacity, and may vary depending on the device's capacity.
	No Motor Trip	Latch	Displayed when the motor is not connected during inverter operation. Operates when Pr.31 is set to 1.

* S100 inverters rated for 4.0kW or less do not support the ground fault trip (GFT) feature. Therefore, an over current trip (OCT) or over voltage trip (OVT) may occur when there is a low-resistance ground fault.
* For products with built-in filters, a CPU Reset or OCT or OC2 Trip can occur in if a Surge input (such as Lightning Surge) is received.

Protection Functions Using Abnormal Internal Circuit Conditions and External Signals

Keypad Display	LCD Display	Type	Description
	Over Heat	Latch	Displayed when the tempertature of the inverter heat sink exceeds the specified value.
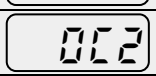	Over Current2	Latch	Displayed when the DC circuit in the inverter detects a specified level of excessive, short circuit current.
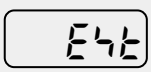	External Trip	Latch	Displayed when an external fault signal is provided by the multi-function terminal. Set one of the multi-function input terminals at In.65-71 to 4 (External Trip) to enable external trip.

Keypad Display	LCD Display	Type	Description
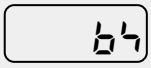	BX	Level	Displayed when the inverter output is blocked by a signal provided from the multi-function terminal. Set one of the multi-function input terminals at In.65-71 to 5 (BX) to enable input block function.
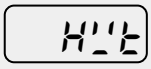	H/W-Diag	Fatal	Displayed when an error is detected in the memory (EEPRom), analog-digital converter output (ADC Off Set), or CPU watchdog (Watch Dog-1, Watch Dog-2). EEP Err: An error in reading/writing parameters due to keypad or memory (EEPRom) fault. ADC Off Set: An error in the current sensing circuit (U/V/W terminal, current sensor, etc.).
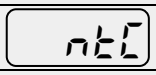	NTC Open	Latch	Displayed when an error is detected in the temperature sensor of the Insulated Gate Bipolar Transistor (IGBT).
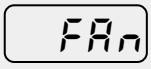	Fan Trip	Latch	Displayed when an error is detected in the cooling fan. Set Pr.79 to 0 to activate fan trip (for models below 22kW capacity).
	Pre-PID Fail	Latch	Displayed when pre-PID is operating with functions set at AP.34–AP.36. A fault trip occurs when a controlled variable (PID feedback) is measured below the set value and the low feedback continues, as it is treated as a load fault.
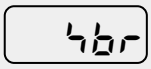	Ext-Brake	Latch	Operates when the external brake signal is provided by the multi-function terminal. Occurs when the inverter output starting current remains below the set value at Ad.41. Set either OU.31 or OU.32 to 35 (BR Control).
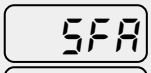 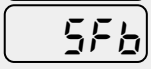	Safety A(B) Err	Latch	Displayed when at least one of the two safety input signals is off.

Protection Functions for Communication Options

Keypad Display	LCD Display	Type	Description
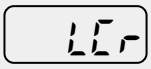	Lost Command	Level	Displayed when a frequency or operation command error is detected during inverter operation by controllers other than the keypad (e.g., using a terminal block and a communication mode). Activate by setting Pr.12 to any value other than 0.
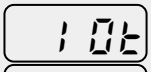 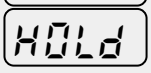	IO Board Trip	Latch	Displayed when the I/O board or external communication card is not connected to the inverter or there is a bad connection.

Keypad Display	LCD Display	Type	Description
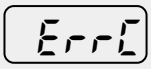			Displayed when the  error code continues for more than 5 sec. ('Errc' -> '-rrc' -> E-rc' -> 'Er-c' -> 'Err-' -> '- -rc' -> 'Er- -' -> '- - - -'-> 'Errc' - > …)
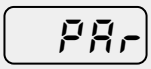	ParaWrite Trip	Latch	Displayed when communication fails during parameter writing. Occurs when using an LCD keypad due to a control cable fault or a bad connection.
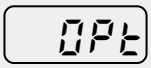	Option Trip-1	Latch	Displayed when a communication error is detected between the inverter and the communication board. Occurs when the communication option card is installed.
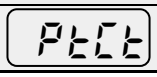	PTC Trip	Latch	Displayed when a PTC error is detected PTC value is exceeded or a fault occurs.

9.1.2 Warning Messages

Keypad Display	LCD Display	Description
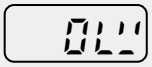	Over Load	Displayed when the motor is overloaded. Operates when Pr.17 is set to 1. To operate, select 5. Set the digital output terminal or relay (OU.31 or OU.33) to 5 (Over Load) to receive overload warning output signals.
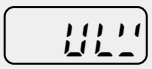	Under Load	Displayed when the motor is underloaded. Operates when Pr.25 is set to 1. Set the digital output terminal or relay (OU.31 or OU.33) to 7 (Under Load) to receive underload warning output signals.
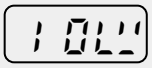	INV Over Load	Displayed when the overload time equivalent to 60% of the inverter overheat protection (inverter IOLT) level, is accumulated. Set the digital output terminal or relay (OU.31 or OU.33) to 6 (IOL) to receive inverter overload warning output signals.
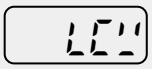	Lost Command	Lost command warning alarm occurs even with Pr.12 set to 0. The warning alarm occurs based on the condition set at Pr.13- 15. Set the digital output terminal or relay (OU.31 or OU.33) to 13 (Lost Command) to receive lost command warning output signals.
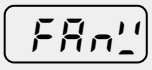	Fan Warning	Displayed when an error is detected from the cooling fan while Pr.79 is set to 1. Set the digital output terminal or relay (OU.31 or OU.33) to 8 (Fan Warning) to receive fan warning output signals
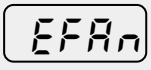	Fan Exchange	An alarm occurs when the value set at PRT-86 is less than the value set at PRT-87. To receive fan exchange output signals, set the digital output terminal or relay (OUT-31 or OUT-33) to 37 (Fan Exchange).
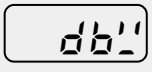	DB Warn %ED	Displayed when the DB resistor usage rate exceeds the set value. Set the detection level at Pr.66.

Keypad Display	LCD Display	Description
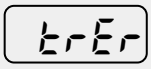	Retry Tr Tune	Tr tune error warning alarm is activated when Dr.9 is set to 4. The warning alarm occurs when the motor's rotor time constant (Tr) is either too low or too high.
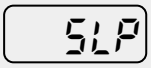	PID Sleep	When the PID operation enters sleep mode, a warning occurs.

9.2 Troubleshooting Fault Trips

When a fault trip or warning occurs due to a protection function, refer to the following table for possible causes and remedies.

Type	Cause	Remedy
Over Load	The load is greater than the motor's rated capacity.	Ensure that the motor and inverter have appropriate capacity ratings.
	The set value for the overload trip level (Pr.21) is too low.	Increase the set value for the overload trip level.
Under Load	There is a motor-load connection problem.	Replace the motor and inverter with models with lower capacity.
	The set value for underload level (Pr.29, Pr.30) is less than the system's minimum load.	Reduce the set value for the underload level.
Over Current1	Acc/Dec time is too short, compared to load inertia (GD2).	Increase Acc/Dec time.
	The inverter load is greater than the rated capacity.	Replace the inverter with a model that has increased capacity.
	The inverter supplied an output while the motor was idling.	Operate the inverter after the motor has stopped or use the speed search function (Cn.60).
	The mechanical brake of the motor is operating too fast.	Check the mechanical brake.
Over Voltage	Deceleration time is too short for the load inertia (GD2).	Increase the acceleration time.
	A generative load occurs at the inverter output.	Use the braking unit.
	The input voltage is too high.	Determine if the input voltage is above the specified value.
Low Voltage	The input voltage is too low.	Determine if the input voltage is below the specificed value.
	A load greater than the power capacity is connected to the system (e.g., a welder, direct motor connection, etc.)	Increase the power capacity.
	The magnetic contactor connected to the power source has a faulty connection.	Replace the magnetic contactor.
Low Voltage2	The input voltage has decreased during	Determine if the input voltage is

Type	Cause	Remedy
	the operation.	above the specified value.
	An input phase-loss has occurred.	Check the input wiring.
	The power supply magnetic contactor is faulty.	Replace the magnetic contractor.
Ground Trip	A ground fault has occurred in the inverter output wiring.	Check the output wiring.
	The motor insulation is damaged.	Replace the motor.
E-Thermal	The motor has overheated.	Reduce the load or operation frequency.
	The inverter load is greater than the rated capacity.	Replace the inverter with a model that has increased capacity.
	The set value for electronic thermal protection is too low.	Set an appropriate electronic thermal level.
	The inverter has been operated at low speed for an extended duration.	Replace the motor with a model that supplies extra power to the cooling fan.
Output Phase Open	The magnetic contactor on the output side has a connection fault.	Check the magnetic contactor on the output side.
	The output wiring is faulty.	Check the output wiring.
Input Phase Open	The magnetic contactor on the input side has a connection fault.	Check the magnetic contactor on the input side.
	The input wiring is faulty.	Check the input wiring.
	The DC link capacitor needs to be replaced.	Replace the DC link capacitor. Contact the retailer or the LS ELECTRIC customer service center.
Inverter OLT	The load is greater than the rated motor capacity.	Replace the motor and inverter with models that have increased capacity.
	The torque boost level is too high.	Reduce the torque boost level.
Over Heat	There is a problem with the cooling system.	Determine if a foreign object is obstructing the air inlet, outlet, or vent.
	The inverter cooling fan has been operated for an extended period.	Replace the cooling fan.
	The ambient temperature is too high.	Keep the ambient temperature below 50℃.
Over Current2	Output wiring is short-circuited.	Check the output wiring.
	There is a fault with the electronic semiconductor (IGBT).	Do not operate the inverter. Contact the retailer or the LS ELECTRIC customer service center.
NTC Open	The ambient temperature is too low.	Keep the ambient temperature above -10℃.
	There is a fault with the internal temperature sensor.	Contact the retailer or the LS ELECTRIC customer service center.
FAN Trip / FAN Warning	A foreign object is obstructing the fan's air vent.	Remove the foreign object from the air inlet or outlet.
	The fan connector is not connected.	Connect the fan connector.
	The cooling fan needs to be replaced.	Replace the cooling fan.

9.3 Troubleshooting Other Faults

When a fault other than those identified as fault trips or warnings occurs, refer to the following table for possible causes and remedies.

Type	Cause	Remedy
Parameters cannot be set.	The inverter is in operation (driving mode).	Stop the inverter to change to program mode and set the parameter.
	The parameter access is incorrect.	Check the correct parameter access level and set the parameter.
	The password is incorrect.	Check the password, disable the parameter lock and set the parameter.
	Low voltage is detected.	Check the power input to resolve the low voltage and set the parameter.
The motor does not rotate.	The frequency command source is set incorrectly.	Check the frequency command source setting.
	The operation command source is set incorrectly.	Check the operation command source setting.
	Power is not supplied to the terminal R/S/T.	Check the terminal connections R/S/T and U/V/W.
	The charge lamp is turned off.	Turn on the inverter.
	The operation command is off.	Turn on the operation command (RUN).
	The motor is locked.	Unlock the motor or lower the load level.
	The load is too high.	Operate the motor independently.
	An emergency stop signal is input.	Reset the emergency stop signal.
	The wiring for the control circuit terminal is incorrect.	Check the wiring for the control circuit terminal.
	The input option for the frequency command is incorrect.	Check the input option for the frequency command.
	The input voltage or current for the frequency command is incorrect.	Check the input voltage or current for the frequency command.
	The PNP/NPN mode is selected incorrectly.	Check the PNP/NPN mode setting.
	The frequency command value is too low.	Check the frequency command and input a value above the minimum frequency.
	The [STOP/RESET] key is pressed.	Check that the stoppage is normal, if so resume operation normally.
	Motor torque is too low.	Change the operation modes (V/F, IM, and Sensorless). If the fault remains, replace the inverter with a model with increased capacity.

Type	Cause	Remedy
The motor rotates in the opposite direction to the command.	The wiring for the motor output cable is incorrect.	Determine if the cable on the output side is wired correctly to the phase (U/V/W) of the motor.
	The signal connection between the control circuit terminal (forward/reverse rotation) of the inverter and the forward/reverse rotation signal on the control panel side is incorrect.	Check the forward/reverse rotation wiring.
The motor only rotates in one direction.	Reverse rotation prevention is selected.	Remove the reverse rotation prevention.
	The reverse rotation signal is not provided, even when a 3-wire sequence is selected.	Check the input signal associated with the 3-wire operation and adjust as necessary.
The motor is overheating.	The load is too heavy.	Reduce the load. Increase the Acc/Dec time.
		Check the motor parameters and set the correct values.
		Replace the motor and the inverter with models with appropriate capacity for the load.
	The ambient temperature of the motor is too high.	Lower the ambient temperature of the motor.
	The phase-to-phase voltage of the motor is insufficient.	Use a motor that can withstand phase-to-phase voltages surges greater than the maximum surge voltage.
		Only use motors suitable for apllications with inverters.
		Connect the AC reactor to the inverter output (set the carrier frequency to 2 kHz).
	The motor fan has stopped or the fan is obstructed with debris.	Check the motor fan and remove any foreign objects.
The motor stops during acceleration or when connected to load.	The load is too high.	Reduce the load.
		Replace the motor and the inverter with models with capacity appropriate for the load.
The motor does not accelerate. /The acceleration time is too long.	The frequency command value is low.	Set an appropriate value.
	The load is too high.	Reduce the load and increase the acceleration time. Check the mechanical brake status.
	The acceleration time is too long.	Change the acceleration time.
	The combined values of the motor properties and the inverter parameter	Change the motor related parameters.

Type	Cause	Remedy
	are incorrect.	
	The stall prevention level during acceleration is low.	Change the stall prevention level.
	The stall prevention level during operation is low.	Change the stall prevention level.
	Starting torque is insufficient.	Change to vector control operation mode. If the fault is still not corrected, replace the inverter with a model with increased capacity.
Motor speed varies during operation.	There is a high variance in load.	Replace the motor and inverter with models with increased capacity.
	The input voltage varies.	Reduce input voltage variation.
	Motor speed variations occur at a specific frequency.	Adjust the output frequency to avoid a resonance area.
The motor rotation is different from the setting.	The V/F pattern is set incorrectly.	Set a V/F pattern that is suitable for the motor specification.
The motor deceleration time is too long even with Dynamic Braking (DB) resistor connected.	The deceleration time is set too long.	Change the setting accordingly.
	The motor torque is insufficient.	If motor parameters are normal, it is likely to be a motor capacity fault. Replace the motor with a model with increased capacity.
	The load is higher than the internal torque limit determined by the rated current of the inverter.	Replace the inverter with a model with increased capacity.
Operation is difficult in underload applications.	The carrier frequency is too high.	Reduce the carrier frequency.
	Over-excitation has occurred due to an inaccurate V/F setting at low speed.	Reduce the torque boost value to avoid over-excitation.
While the inverter is in operation, a control unit malfunctions or noise occurs.	Noise occurs due to switching inside the inverter.	Change the carrier frequency to the minimum value.
		Install a micro surge filter in the inverter output.
When the inverter is operating, the earth leakage breaker is activated.	An earth leakage breaker will interrupt the supply if current flows to ground during inverter operation.	Connect the inverter to a ground terminal.
		Check that the ground resistance is less than 100Ω for 200V inverters and less than 10Ω for 400V inverters.
		Check the capacity of the earth leakage breaker and make the appropriate connection, based on

Type	Cause	Remedy
		the rated current of the inverter.
		Lower the carrier frequency.
		Make the cable length between the inverter and the motor as short as possible.
The motor vibrates severely and does not rotate normally.	Phase-to-phase voltage of 3-phase power source is not balanced.	Check the input voltage and balance the voltage.
		Check and test the motor's insulation.
The motor makes humming, or loud noises.	Resonance occurs between the motor's natural frequency and the carrier frequency.	Slightly increase or decrease the carrier frequency.
	Resonance occurs between the motor's natural frequency and the inverter's output frequency.	Slightly increase or decrease the carrier frequency.
		Use the frequency jump function to avoid the frequency band where resonance occurs.
The motor vibrates/hunts.	The frequency input command is an external, analog command.	In situations of noise inflow on the analog input side that results in command interference, change the input filter time constant (In.07).
	The wiring length between the inverter and the motor is too long.	Ensure that the total cable length between the inverter and the motor is less than 200m (50m for motors rated 3.7 kW or lower).
The motor does not come to a complete stop when the inverter output stops.	It is difficult to decelerate sufficiently, because DC braking is not operating normally.	Adjust the DC braking parameter.
		Increase the set value for the DC braking current.
		Increase the set value for the DC braking stopping time.
The output frequency does not increase to the frequency reference.	The frequency reference is within the jump frequency range.	Set the frequency reference higher than the jump frequency range.
	The frequency reference is exceeding the upper limit of the frequency command.	Set the upper limit of the frequency command higher than the frequency reference.
	Because the load is too heavy, the stall prevention function is working.	Replace the inverter with a model with increased capacity.
The cooling fan does not rotate.	The control parameter for the cooling fan is set incorrectly.	Check the control parameter setting for the cooling fan.

10 Maintenance

This chapter explains how to replace the cooling fan, the regular inspections to complete, and how to store and dispose of the product. An inverter is vulnerable to environmental conditions and faults also occur due to component wear and tear. To prevent breakdowns, please follow the maintenance recommendations in this section.

⚠ Caution

- Before you inspect the product, read all safety instructions contained in this manual.
- Before you clean the product, ensure that the power is off.
- Clean the inverter with a dry cloth. Cleaning with wet cloths, water, solvents, or detergents may result in electric shock or damage to the product.

10.1 Regular Inspection Lists

10.1.1 Daily Inspections

Inspection area	Inspection item	Inspection details	Inspection method	Judgment standard	Inspection equipment
All	Ambient environment	Is the ambient temperature and humidity within the design range, and is there any dust or foreign objects present?	Refer to *1.3 Installation Considerations* on page *8*.	No icing (ambient temperature: -10 - +40) and no condensation (ambient humidity below 50%)	Thermometer, hygrometer, recorder
	Inverter	Is there any abnormal vibration or noise?	Visual inspection	No abnormality	
	Power voltage	Are the input and output voltages normal?	Measure voltages between R/ S/ T-phases in. the inverter terminal block.	Refer to *11.1 Input and Output Specification* on page *405*.	Digital multimeter tester
Input/Output circuit	Smoothing capacitor	Is there any leakage from the inside?	Visual inspection	No abnormality	-

Inspection area	Inspection item	Inspection details	Inspection method	Judgment standard	Inspection equipment
		Is the capacitor swollen?			
Cooling system	Cooling fan	Is there any abnormal vibration or noise?	Turn off the system and check operation by rotating the fan manually.	Fan rotates smoothly	-
Display	Measuring device	Is the display value normal?	Check the display value on the panel.	Check and manage specified values.	Voltmeter, ammeter, etc.
Motor	All	Is there any abnormal vibration or noise?	Visual inspection	No abnormality	-
		Is there any abnormal smell?	Check for overheating or damage.		

10.1.2 Annual Inspections

Inspection area	Inspection item	Inspection details	Inspection method	Judgment standard	Inspection equipment
Input/Output circuit	All	Megger test (between input/output terminals and and earth terminal)	Disconnect inverter and short R/S/T/U/V/W terminals, and then measure from each terminal to the ground terminal using a Megger.	Must be above 5 MΩ	DC 500 V Megger
		Is there anything loose in the device?	Tighten up all screws.	No abnormality	
		Is there any evidence of parts overheating?	Visual inspection		
	Cable connections	Are there any corroded cables?	Visual inspection	No abnormality	-

Inspection area	Inspection item	Inspection details	Inspection method	Judgment standard	Inspection equipment
		Is there any damage to cable insulation?			
	Terminal block	Is there any damage?	Visual inspection	No abnormality	-
	Smoothing condenser	Measure electrostatic capacity.	Measure with capacity meter.	Rated capacity over 85%	Capacity meter
	Relay	Is there any chattering noise during operation?	Visual inspection	No abnormality	-
		Is there any damage to the contacts?	Visual inspection		
	Brake resistor	Is there any damage from resistance?	Visual inspection	No abnormality	Digital multimeter / analog tester
		Check for disconnection.	Disconnect one side and measure with a tester.	Must be within ±10% of the rated value of the resistor.	
Control circuit Protection circuit	Operation check	Check for output voltage imbalance while the inverter is in operation.	Measure voltage between the inverter output terminal U/ V/ W.	Balance the voltage between phases: within 4V for 200V series and within 8V for 400V series.	Digital multimeter or DC voltmeter
		Is there an error in the display circuit after the sequence protection test?	Test the inverter ouput protection in both short and open circuit conditions.	The circuit must work according to the sequence.	
Cooling system	Cooling fan	Are any of the fan parts loose?	Check all connected parts and tighten all	No abnormality	-

Inspection area	Inspection item	Inspection details	Inspection method	Judgment standard	Inspection equipment
			screws.		
Display	Display device	Is the display value normal?	Check the command value on the display device.	Specified and managed values must match.	Voltmeter, Ammeter, etc.

10.1.3 Bi-annual Inspections

Inspection area	Inspection item	Inspection details	Inspection method	Judgment standard	Inspection equipment
Motor	Insulation resistance	Megger test (between the input, output and earth terminals).	Disconnect the cables for terminals U/V/W and test the wiring.	Must be above 5 MΩ	DC 500 V Megger

Caution

Do not run an insulation resistance test (Megger) on the control circuit as it may result in damage to the product.

10.2 Replacing Major Components

Refer to following for information on replacing major components.

10.2.1 Exchange Cycle for Major Components

Following table shows the cycles and information for major components.

Components	Exchange standard	Symptom	Action
Cooling fan	3 years	Spinning failure	Make inquiries to the A/S center and replace it with a new product.
Main circuit electrolytic condenser	3 years	Capacity reduction	Make inquiries to the A/S center and replace it with a new product.
Main circuit relay	-	Operation failure	Make inquiries to the A/S center.

Note

The life times of major components are based on the operating rated load consecutively. The lifetime may be different according to conditions and environment.

10.3 Storage and Disposal

10.3.1 Storage

If you are not using the product for an extended period, store it in the following way:

- Store the product in the same environmental conditions as specified for operation (refer to *1.3 Installation Considerations* on page *8*).
- When storing the product for a period longer than 3 months, store it between 10˚C and 30˚C, to prevent depletion of the electrolytic capacitor.
- Do not expose the inverter to snow, rain, fog, or dust.
- Package the inverter in a way that prevents contact with moisture. Keep the moisture level below 70% in the package by including a desiccant, such as silica gel.

10.3.2 Disposal

When disposing of the product, categorize it as general industrial waste. Recyclable materials are included in the product, so recycle them whenever possible. The packing materials and all metal parts can be recycled. Although plastic can also be recycled, it can be incinerated under contolled conditions in some regions.

Caution

If the inverter has not been operated for a long time, capacitors lose their charging characteristics and are depleted. To prevent degradation, turn on the product once a year and allow the device to operate for 30-60 min. Run the device under no-load conditions.

11 Technical Specification

11.1 Input and Output Specification

11.1.1 0.4-22kW Models

Single Phase 200V (0.4-2.2 kW)

Model □□□□S100-1□□□□□			0004	0008	0015	0022
Applied motor	Heavy load	HP	0.5	1.0	2.0	3.0
		kW	0.4	0.75	1.5	2.2
	Normal load	HP	1.0	2.0	3.0	5.0
		kW	0.75	1.5	2.2	3.7
Rated output	Rated capacity (kVA)	Heavy load	1.0	1.9	3.0	4.2
		Normal load	1.2	2.3	3.8	4.6
	Rated current (A)	Heavy load	2.5	5.0	8.0	11.0
		Normal load	3.1	6.0	9.6	12.0
	Output frequency		0-400 Hz (IM Sensorless: 0-120 Hz)			
	Output voltage (V)		3-phase 200-240 V			
Rated input	Working voltage (V)		Single phase 200-240 V AC (-15% to +10%)			
	Input frequency		50-60 Hz (±5%)			
	Rated current (A)	Heavy load	4.4	9.3	15.6	21.7
		Normal load	5.8	11.7	19.7	24.0
Weight (lb/kg)	Non-EMC Filter Type		2.0/0.9	2.9/1.3	3.3/1.5	4.4/2.0
	EMC Filter Type		2.5/1.1	3.4/1.6	3.9/1.8	4.9/2.2
	IP66 Type(EMC)		8.2/3.7	11.7/5.3	12.1/5.5	12.4/5.6
	IP66 Type(Non-EMC)		7.9/3.6	11.5/5.2	11.9/5.4	12.1/5.5

- The standard motor capacity is based on a standard 4-pole motor.
- The standard used for 200 V inverters is based on a 220 V supply voltage, and for 400V inverters is based on a 440 V supply voltage.
- The rated output current is limited based on the carrier frequency set at Cn.04.
- The output voltage becomes 20~40% lower during no-load operations to protect the inverter from the impact of the motor closing and opening (0.4-4.0kW models only).
- IP66 models do not support normal load operation.

3 Phase 200V (0.4-4 kW)

Model □□□□S100–2□□□□□			0004	0008	0015	0022	0037	0040
Applied motor	Heavy load	HP	0.5	1.0	2.0	3.0	5.0	5.4
		kW	0.4	0.75	1.5	2.2	3.7	4.0
	Normal load	HP	1.0	2.0	3.0	5.0	5.4	7.5
		kW	0.75	1.5	2.2	3.7	4.0	5.5
Rated output	Rated capacity (kVA)	Heavy load	1.0	1.9	3.0	4.2	6.1	6.5
		Normal load	1.2	2.3	3.8	4.6	6.9	6.9
	Rated current [3-Phase input] (A)	Heavy load	2.5	5.0	8.0	11.0	16.0	17.0
		Normal load	3.1	6.0	9.6	12.0	18.0	18.0
	Rated current [Single-Phase input] (A)	Heavy load	1.5	2.8	4.6	6.1	8.8	9.3
		Normal load	1.8	3.3	5.7	6.6	9.9	9.9
	Output frequency		0-400 Hz (IM Sensorless: 0-120 Hz)					
	Output voltage (V)		3-phase 200-240 V					
Rated input	Working voltage (V)		3-phase 200-240 VAC (-15% to +10%) Single phase 240VAC(-5% to +10%)					
	Input frequency		50-60 Hz (±5%) (In case of single phase input, input frequency is only 60Hz(±5%).)					
	Rated current (A)	Heavy load	2.2	4.9	8.4	11.8	17.5	18.5
		Normal load	3.0	6.3	10.8	13.1	19.4	19.4
Weight (lb/kg)	Non-EMC Filter Type		2.0/0.9	2.0/0.9	2.9/1.3	3.3/1.5	4.4/2.0	4.4/2.0
	IP66 Type(Non-EMC)		7.9/3.6	7.9/3.6	11.5/5.2	11.9/5.4	12.1/5.5	12.1/5.5

- The standard motor capacity is based on a standard 4-pole motor.
- The standard used for 200 V inverters is based on a 220 V supply voltage, and for 400V inverters is based on a 440 V supply voltage.
- The rated output current is limited based on the carrier frequency set at Cn.04.
- The output voltage becomes 20~40% lower during no-load operations to protect the inverter from the impact of the motor closing and opening (0.4-4.0kW models only).
- IP66 models do not support normal load operation.

3 Phase 200V (5.5-15 kW)

Model □□□□S100–2□□□□□			0055	0075	0110	0150
Applied motor	Heavy load	HP	7.5	10	15	20
		kW	5.5	7.5	11	15
	Normal load	HP	10	15	20	25
		kW	7.5	11	15	18.5
Rated output	Rated capacity (kVA)	Heavy load	9.1	12.2	17.5	22.9
		Normal load	11.4	15.2	21.3	26.3
	Rated current [3-Phase input] (A)	Heavy load	24.0	32.0	46.0	60.0
		Normal load	30.0	40.0	56.0	69.0
	Rated current [Single-Phase input] (A)	Heavy load	13.0	18.0	26.0	33.0
		Normal load	16.0	22.0	31.0	38.0
	Output frequency		0-400 Hz (IM Sensorless : 0-120 Hz)			
	Output voltage (V)		3 phase 200-240V			
Rated input	Working voltage (V)		3 phase 200-240VAC (-15% to +10%) Single phase 240VAC(-5% to +10%)			
	Input frequency		50-60 Hz (±5%) (In case of single phase input, input frequency is only 60Hz(±5%).)			
	Rated current (A)	Heavy load	25.8	34.9	50.8	66.7
		Normal load	32.7	44.2	62.3	77.2
Weight (lb/kg)	Non-EMC Filter Type		6.8/3.1	6.8/3.1	9.7/4.4	15.2/6.9
	IP66 Type(Non-EMC)		19.4/8.8	19.4/8.8	20.7/9.4	26.2/11.9

- The standard motor capacity is based on a standard 4-pole motor
- The standard used for 200 V inverters is based on a 220 V supply voltage, and for 400V inverters is based on a 440 V supply voltage.
- The rated output current is limited based on the carrier frequency set at Cn.04.
- IP66 models do not support normal load operation.

3-Phase 400V (0.4-4 kW)

Model □□□□S100–4□□□□□			0004	0008	0015	0022	0037	0040
Applied motor	Heavy load	HP	0.5	1.0	2.0	3.0	5.0	5.4
		kW	0.4	0.75	1.5	2.2	3.7	4.0
	Normal load	HP	1.0	2.0	3.0	5.0	5.4	7.5
		kW	0.75	1.5	2.2	3.7	4.0	5.5
Rated output	Rated capacity (kVA)	Heavy load	1.0	1.9	3.0	4.2	6.1	6.5
		Normal load	1.5	2.4	3.9	5.3	7.6	7.6
	Rated current [3-Phase input] (A)	Heavy load	1.3	2.5	4.0	5.5	8.0	9.0
		Normal load	2.0	3.1	5.1	6.9	10.0	10.0
	Rated current [Single-Phase input] (A)	Heavy load	0.8	1.5	2.3	3.1	4.8	5.4
		Normal load	1.3	1.9	3.0	3.9	5.9	5.9
	Output frequency		0-400 Hz (IM Sensorless: 0-120 Hz)					
	Output voltage (V)		3-phase 380-480V					
Rated input	Working voltage (V)		3-phase 380-480VAC (-15% to +10%) Single phase 480VAC(-5% to +10%)					
	Input frequency		50-60 Hz (±5%) (In case of single phase input, input frequency is only 60Hz(±5%).)					
	Rated current (A)	Heavy load	1.1	2.4	4.2	5.9	8.7	9.8
		Normal load	2.0	3.3	5.5	7.5	10.8	10.8
Weight (lb/kg)	EMC Filter Type		2.6/1.2	2.6/1.2	3.9/1.8	4.0/1.8	4.9/2.2	4.9/2.2
	Non-EMC Filter Type		2.0/0.9	2.0/0.9	2.9/1.3	3.3/1.5	4.4/2.0	4.4/2.0
	IP66 Type(EMC)		8.2/3.7	8.2/3.7	11.7/5.3	12.1/5.5	12.4/5.6	12.4/5.6
	IP66 Type(Non-EMC)		7.9/3.6	7.9/3.6	11.5/5.2	11.9/5.4	12.1/5.5	12.1/5.5

- The standard motor capacity is based on a standard 4-pole motor.
- The standard used for 200 V inverters is based on a 220 V supply voltage, and for 400V inverters is based on a 440 V supply voltage.
- The rated output current is limited based on the carrier frequency set at Cn.04.
- The output voltage becomes 20~40% lower during no-load operations to protect the inverter from the impact of the motor closing and opening (0.4-4.0kW models only).
- IP66 models do not support normal load operation.

3-Phase 400V (5.5-22 kW)

Model □□□□S100–4□□□□□			0055	0075	0110	0150	0185	0220
Applied motor	Heavy load	HP	7.5	10	15	20	25	30
		kW	5.5	7.5	11	15	18.5	22
	Normal load	HP	10	15	20	25	30	40
		kW	7.5	11	15	18.5	22	30
Rated output	Rated capacity (kVA)	Heavy load	9.1	12.2	18.3	22.9	29.7	34.3
		Normal load	12.2	17.5	22.9	29.0	33.5	44.2
	Rated current [3-Phase input] (A)	Heavy load	12.0	16.0	24.0	30.0	39.0	45.0
		Normal load	16.0	23.0	30.0	38.0	44.0	58.0
	Rated current [Single-Phase input] (A)	Heavy load	7.1	9.5	15.0	18.0	23.0	27.0
		Normal load	9.5	14.0	18.0	23.0	27.0	35.0
	Output frequency		0-400 Hz (IM Sensorless: 0-120 Hz)					
	Output voltage (V)		3-phase 380-480V					
Rated input	Working voltage (V)		3-phase 380-480VAC (-15% to +10%) Single phase 480VAC(-5% to +10%)					
	Input frequency		50-60 Hz (±5%) (In case of single phase input, input frequency is only 60Hz(±5%).)					
	Rated current (A)	Heavy load	12.9	17.5	26.5	33.4	43.6	50.7
		Normal load	17.5	25.4	33.4	42.5	49.5	65.7
Weight (lb/kg)	EMC Filter Type		7.3/3.3	7.5/3.4	10.1/4.6	10.5/4.8	16.5/7.5	16.5/7.5
	IP66 Type(EMC)		19.4/8.8	19.6/8.9	21.2/9.6	21.6/9.8	27.3/12.4	27.3/12.4
	IP66 Type(Non-EMC)		19.0/8.6	19.2/8.7	20.7/9.4	21.2/9.6	26.9/12.2	26.9/12.2

- The standard motor capacity is based on a standard 4-pole motor.
- The standard used for 200 V inverters is based on a 220 V supply voltage, and for 400V inverters is based on a 440 V supply voltage.
- The rated output current is limited, based on the carrier frequency set at Cn.04.
- IP66 models do not support normal load operation.

Note

Precautions for 1–phase input to 3-phase drive

- Please connect single-phase input to R(L1) and T(L3).
- AC or DC reactor is necessary to reduce DC ripple. Please select built-in reactor type for 30-75kW. For 0.4-22kW, external AC or DC reactor should be installed.
- Same peripheral devices (including a fuse and reactor) as 3-phase can be used for 1-phase as well.
- If phase open trip occurs, please turn off the input phase open protection(PR-05).
- Protection for output current like OCT or IOLT is based on 3-phase input ratings which is larger than single-phase input. User should set the parameters that are relative to motor information(bA-11~16), overload trip(Pr-17~22) and E-thermal functions(Pr-40~43)
- Performance of sensorless control could be unstable depending on DC ripple.
- The minimum input voltage must be larger than 228Vac for 240Vac supply and 456Vac for 480Vac supply to ensure motor voltage production of 207Vac and 415Vac, respectively.
- To minimize the effect of voltage deprivation, please choose 208Vac motor for 240Vac supply and 400Vac motor for 480Vac supply.

11.1.2 30-75kW Models

3-Phase 400 V (30–75 kW)

Model □□□□S100–4□□□			0300	0370	0450	0550	0750
Applied motor	HP		40	50	60	75	100
	kW		30	37	45	55	75
Rated output	Rated capacity (kVA)	Heavy load	46	57	69	84	116
		Normal load	55	67	78	106	126
	Rated current [3-Phase input] (A)	Heavy load	61	75	91	110	152
		Normal load	75	91	107	142	169
	Rated current [Single-Phase input] (A)	Heavy load	32	39	47	57	78
		Normal load	39	47	55	73	87
	Output frequency		0-400 Hz (IM Sensorless: 0-120 Hz)				
	Output voltage (V)		3-phase 380-480 V				
Rated input	Working voltage (V)		3-phase 380-480 VAC (-15% to +10%) Single phase 480VAC(-5% to +10%)				
	Input frequency		50-60 Hz (±5%) (In case of single phase input, input frequency is only 60Hz(±5%).)				
	Rated current (A)	Heavy load	56	69	85	103	143
		Normal load	69	85	100	134	160
Weight (lb/kg)	EMC Filter Type		57/26	77/35	77/35	-	-
	Non-EMC Filter Type		55/25	75/34	75/34	95/43	95/43

- 30-75kW models do not support IP66 certification.
- The 55-75 kW inverters do not have built-in EMC since they satisfy EMC standards even without it.

11.2 Product Specification Details

<table>
<tr><th colspan="3">Items</th><th colspan="2">Description</th></tr>
<tr><td rowspan="6">Control</td><td colspan="2">Control method</td><td colspan="2">V/F control, slip compensation, sensorless vector</td></tr>
<tr><td colspan="2">Frequency settings power resolution</td><td colspan="2">Digital command: 0.01 Hz
Analog command: 0.06 Hz (60 Hz standard)</td></tr>
<tr><td colspan="2">Frequency accuracy</td><td colspan="2">1% of maximum output frequency</td></tr>
<tr><td colspan="2">V/F pattern</td><td colspan="2">Linear, square reduction, user V/F</td></tr>
<tr><td colspan="2">Overload capacity</td><td colspan="2">Heavy load rated current: 150% 1 min, normal load rated current: 120% 1 min</td></tr>
<tr><td colspan="2">Torque boost</td><td colspan="2">Manual torque boost, automatic torque boost</td></tr>
<tr><td rowspan="5">Operation</td><td colspan="2">Operation type</td><td colspan="2">Select key pad, terminal strip, or communication operation</td></tr>
<tr><td colspan="2">Frequency settings</td><td colspan="2">Analog type: -10~10V, 0~10V, 4~20mA
Digital type: key pad, pulse train input</td></tr>
<tr><td colspan="2">Operation function</td><td>• PID control
• 3-wire operation
• Frequency limit
• Second function
• Anti-forward and reverse direction rotation
• Commercial transition
• Speed search
• Power braking
• Leakage reduction</td><td>• Up-down operation
• DC braking
• Frequency jump
• Slip compensation
• Automatic restart
• Automatic tuning
• Energy buffering
• Flux braking
• Fire Mode</td></tr>
<tr><td rowspan="2">Input</td><td rowspan="2">Multi function terminal (7EA) P1-P7</td><td colspan="2">Select PNP (Source) or NPN (Sink) mode. Functions can be set according to In.65- In.71 codes and parameter settings.
(Standard I/O is only provided for P5.)</td></tr>
<tr><td>• Forward direction operation
• Reset
• Emergency stop
• Multi step speed frequency-high/med/low
• DC braking during stop
• Frequency increase
• 3-wire
• Local/remote operation mode transition
• Select acc/dec/stop</td><td>• Reverse direction operation
• External trip
• Jog operation
• Multi step acc/dec-high/med/low
• Second motor selection
• Frequency reduction
• Fix analog command frequency
• Transtion from PID to general operation</td></tr>
</table>

<table>
<tr><th colspan="3">Items</th><th colspan="3">Description</th></tr>
<tr><td rowspan="7"></td><td></td><td>Pulse train</td><td colspan="3">0-32 kHz, Low Level: 0-2.5V, High Level: 3.5-12V</td></tr>
<tr><td rowspan="5">Output</td><td>Multi function open collector terminal</td><td rowspan="2">Fault output and inverter operation status output</td><td>Less than DC 24V, 50mA</td></tr>
<tr><td>Multi function relay terminal</td><td>Less than (N.O., N.C.) AC250V 1A,
Less than DC 30V, 1A</td></tr>
<tr><td>Analog output, Analog output 1</td><td colspan="2">0-12Vdc (0-24mA): Select frequency, output current, output voltage, DC terminal voltage and others</td></tr>
<tr><td>Analog output 2</td><td colspan="2">0-12Vdc: Select frequency, output current, output voltage, DC terminal voltage and others</td></tr>
<tr><td>Pulse train</td><td colspan="2">Maximum 32 kHz, 10-12V</td></tr>
<tr><td rowspan="3">Protection function</td><td colspan="2" rowspan="2">Trip</td><td>• Over current trip
• External signal trip
• ARM short circuit current trip
• Over heat trip
• Input imaging trip
• Ground trip
• Motor over heat trip
• I/O board link trip
• No motor trip
• Parameter writing trip
• Emergency stop trip
• Command loss trip
• External memory error
• CPU watchdog trip
• Motor normal load trip</td><td>• Over voltage trip
• Temperature sensor trip
• Inverter over heat
• Option trip
• Output imaging trip
• Inverter overload trip
• Fan trip
• Pre-PID operation failure
• External brake trip
• Low voltage trip during operation
• Low voltage trip
• Safety A(B) trip
• Analog input error
• Motor overload trip</td></tr>
<tr><td colspan="2">Alarm</td><td colspan="2">Command loss trip alarm, overload alarm, normal load alarm, inverter overload alarm, fan operation alarm, resistance braking rate alarm, number of corrections on rotor tuning error</td></tr>
<tr><td colspan="2">Instantaneous blackout</td><td colspan="2">Heavy load less than 15 ms (normal load less than 8 ms): continue operation (must be within the rated input voltage</td></tr>
</table>

Items		Description
		and rated output range) Heavy load more than 15 ms (normal load more than 8 ms): auto restart operation
Structure/ working environment	Cooling type	Forced fan cooling structure (excluding some models)
	Protection structure	• IP 20 , UL Open Type (UL Enclosed Type 1 is satisfied by conduit installation option.) • IP66(NEMA 4X Indoor Only)
	Input Mode	• 0.4-22kW: Keypad (LCD loader: Installation available but sold separately.) • 30-75kW: LCD loader
	Ambient temperature	Heavy load: -10-50℃ (14-122°F), normal load: -10-40℃ (14-104°F) No ice or frost should be present. Working under normal load at 50℃ (122°F), it is recommended that less than 80% load is applied.
	Ambient humidity	Relative humidity less than 90% RH (to avoid condensation forming)
	Storage temperature.	-20°C-65°C (-4-149°F)
	Surrounding environment	Prevent contact with corrosive gases, inflammable gases, oil stains, dust, and other pollutants (Pollution Degree 3 Environment).
	Operation altitude / Vibration	Maximum 1000m above sea level for standard operation. From 1000 to 4000m, the rated input voltage and rated output current of the drive must be derated by 1% for every 100m. / less than 1G (9.8m/sec^2)
	Pressure	70-106 kPa

* , ** IP66 models do not support normal load operation.

11.3 External Dimensions

11.3.1 0.4-22kW Models

0.4 kW (Single Phase), 0.4-0.8 kW (3-Phase)

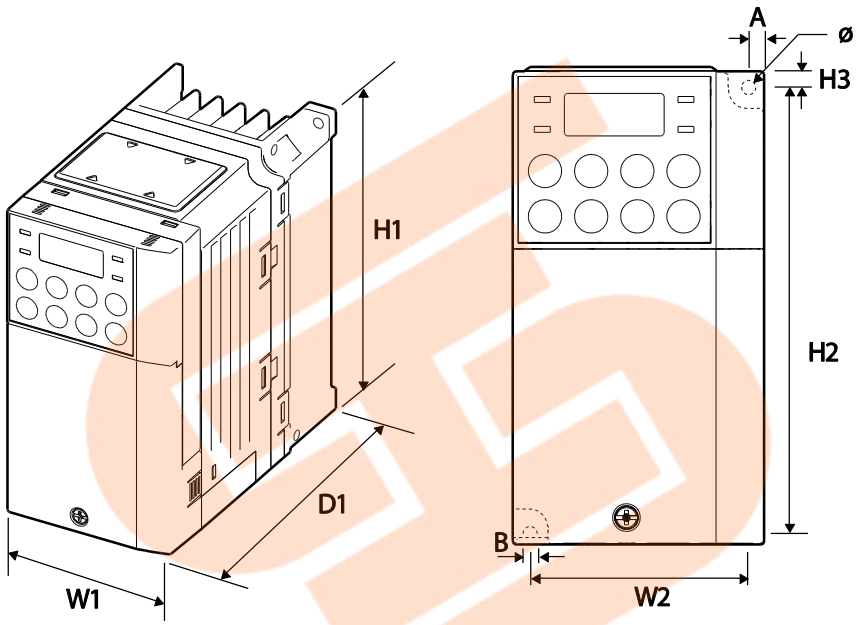

0.8kW-1.5kW(Single Phase 200V), 1.5kW-2.2kW(3-Phase 400V) EMC filter Type

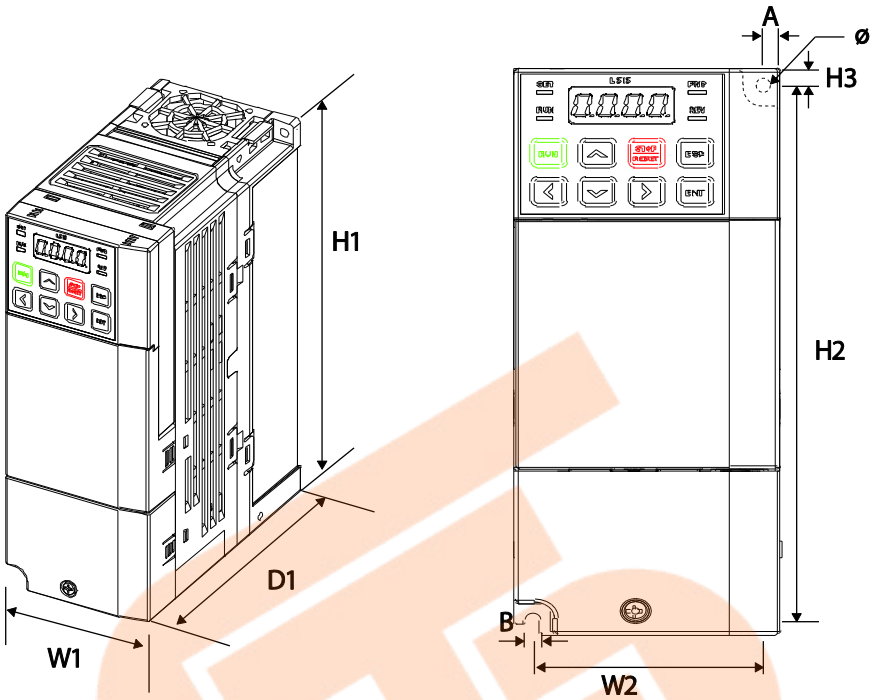

Items	W1	W2	H1	H2	H3	D1	A	B	Φ
0004S100-1, 0008S100-2, 0008S100-4	68 (2.68)	61.1 (2.41)	128 (5.04)	119 (4.69)	5 (0.20)	128 (5.04)	3.5 (0.14)	4 (0.16)	4 (0.16)
0004S100-2, 0004S100-4	68 (2.68)	61.1 (2.41)	128 (5.04)	119 (4.69)	5 (0.20)	123 (4.84)	3.5 (0.14)	4 (0.16)	4.2 (0.17)
004S100-1, 004S100-4, 008S100-4 EMC Type	68 (2.68)	63.5 (2.50)	180 (7.09)	170.5 (6.71)	5 (0.20)	130 (5.12)	4.5 (0.18)	4.5 (0.18)	4.2 (0.17)

Units: mm (inches)

0.8-1.5 kW (Single Phase), 1.5-2.2 kW(3-Phase)

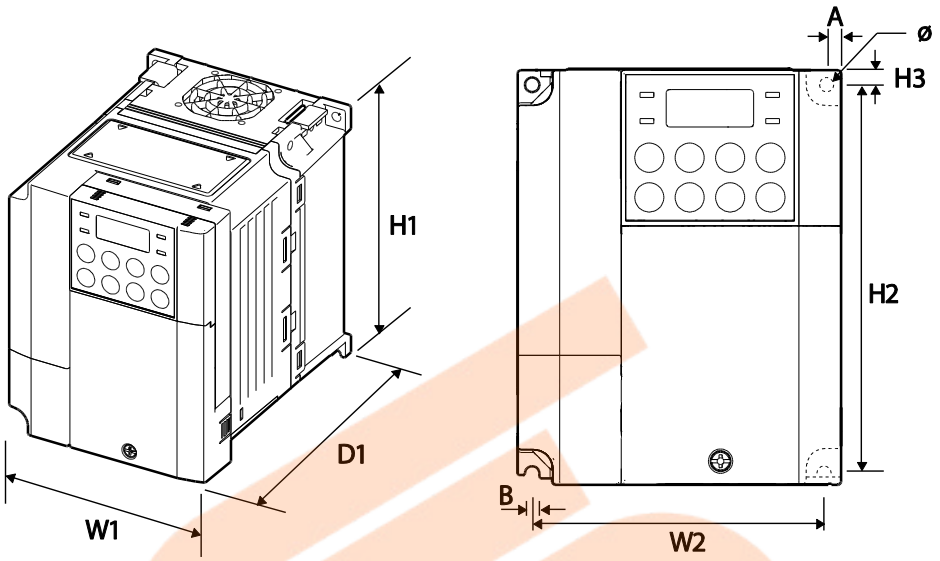

0.8kW-1.5kW(Single Phase 200V), 1.5kW-2.2kW(3-Phase 400V) EMC filter Type

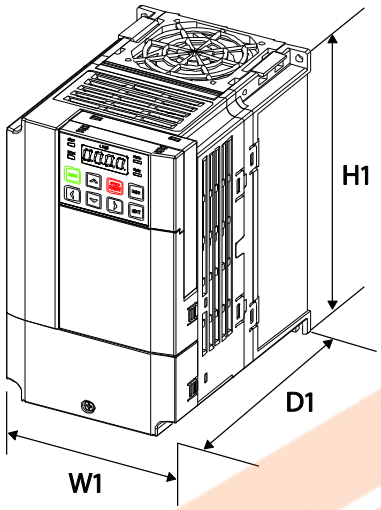

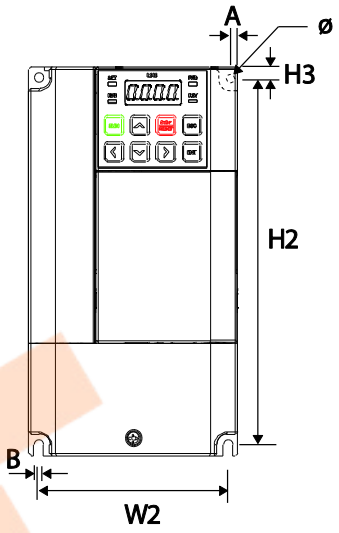

Items	W1	W2	H1	H2	H3	D1	A	B	Φ
0008S100-1, 0015S100-2, 0015S100-4	100 (3.94)	91 (3.58)	128 (5.04)	120 (4.72)	4.5 (0.18)	130 (5.12)	4.5 (0.18)	4.5 (0.18)	4.5 (0.18)
0015S100-1, 0022S100-2, 0022S100-4	100 (3.94)	91 (3.58)	128 (5.04)	120 (4.72)	4.5 (0.18)	145 (5.71)	4.5 (0.18)	4.5 (0.18)	4.5 (0.18)
0008S100-1, 0015S100-1, 0015S100-4, 0022S100-4 EMC Type	100 (3.94)	91 (3.58)	180 (7.09)	170 (6.69)	5 (0.20)	140 (5.51)	4.5 (0.18)	4.5 (0.18)	4.2 (0.17)

Units: mm (inches)

2.2 kW (Single Phase), 3.7-4.0 kW (3 Phase)

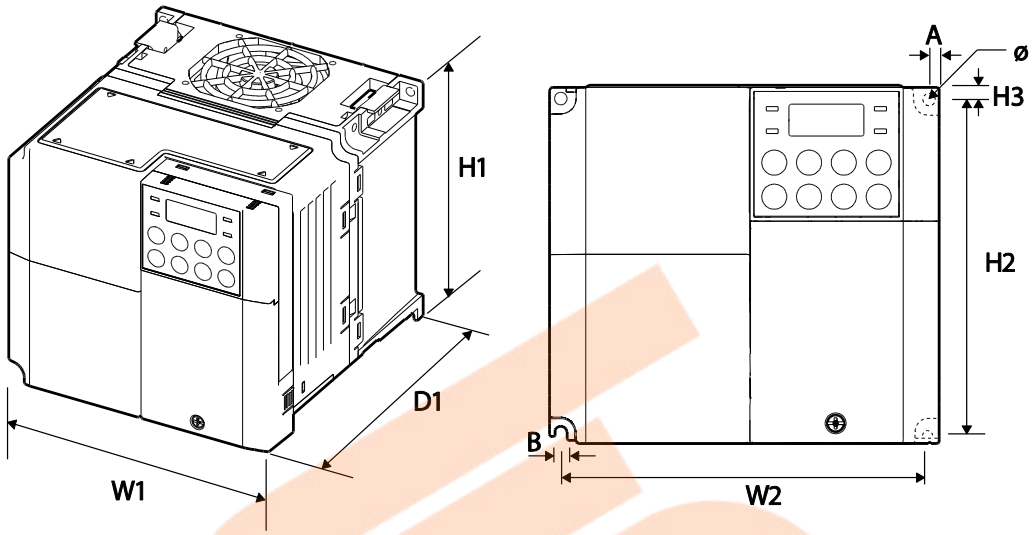

2.2kW(Single Phase 200V), 3.7-4.0kW(3-Phase 400V) EMC filter Type

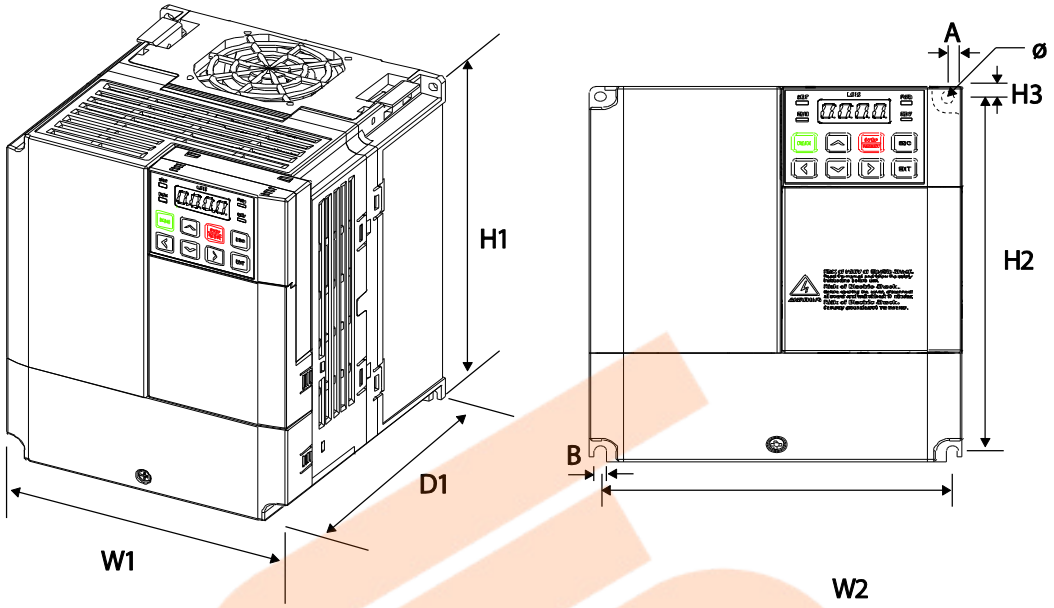

Items	W1	W2	H1	H2	H3	D1	A	B	Φ
0022S100-1 0037S100-2 0040S100-2 0037S100-4 0040S100-4	140 (5.51)	132.2 (5.20)	128 (5.04)	120.7 (4.75)	3.7 (0.15)	145 (5.71)	3.9 (0.15)	4.4 (0.17)	4.5 (0.18)
0022S100-1, 0037S100-4, 0040S100-4 EMC Type	140 (5.51)	132 (5.20)	180 (7.09)	170 (6.69)	5 (0.20)	140 (5.51)	4 (0.16)	4 (0.16)	4.2 (0.17)

Units: mm (inches)

5.5-22 kW (3-Phase)

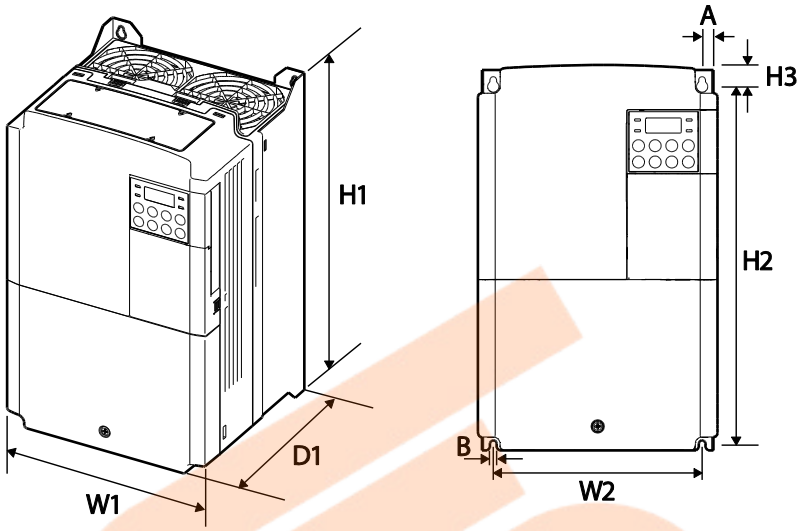

Items		W1	W2	H1	H2	H3	D1	A	B	Φ
3-phase 200V	0055S100-2	160 (6.30)	137 (5.39)	232 (9.13)	216.5 (8.52)	10.5 (0.41)	140 (5.51)	5 (0.20)	5 (0.20)	-
	0075S100-2									
	0110S100-2	180 (7.09)	157 (6.18)	290 (11.4)	273.7 (10.8)	11.3 (0.44)	163 (6.42)	5 (0.20)	5 (0.20)	-
	0150S100-2	220 (8.66)	193.8 (7.63)	350 (13.8)	331 (13.0)	13 (0.51)	187 (7.36)	6 (0.24)	6 (0.24)	-
3-phase 400V	0055S100-4	160 (6.30)	137 (5.39)	232 (9.13)	216.5 (8.52)	10.5 (0.41)	140 (5.51)	5 (0.20)	5 (0.20)	-
	0075S100-4									
	0110S100-4	180 (7.09)	157 (6.18)	290 (11.4)	273.7 (10.8)	11.3 (0.44)	163 (6.42)	5 (0.20)	5 (0.20)	-
	0150S100-4									
	0185S100-4	220 (8.66)	193.8 (7.63)	350 (13.8)	331 (13.0)	13 (0.51)	187 (7.36)	6 (0.24)	6 (0.24)	-
	0220S100-4									

Units: mm (inches)

11.3.2 30-75kW Models

30 kW (3-Phase)

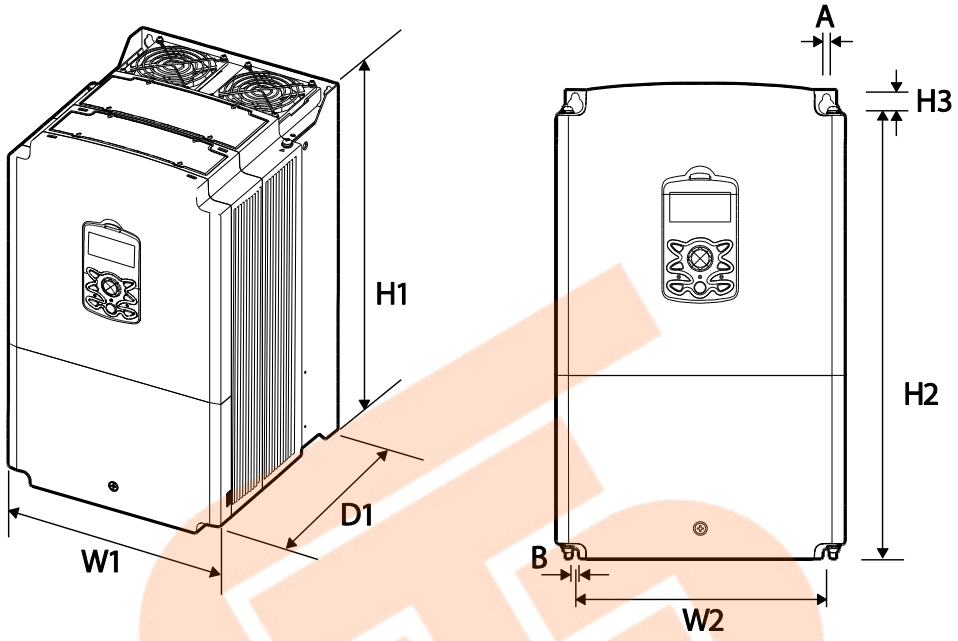

37–45 kW (3-Phase)

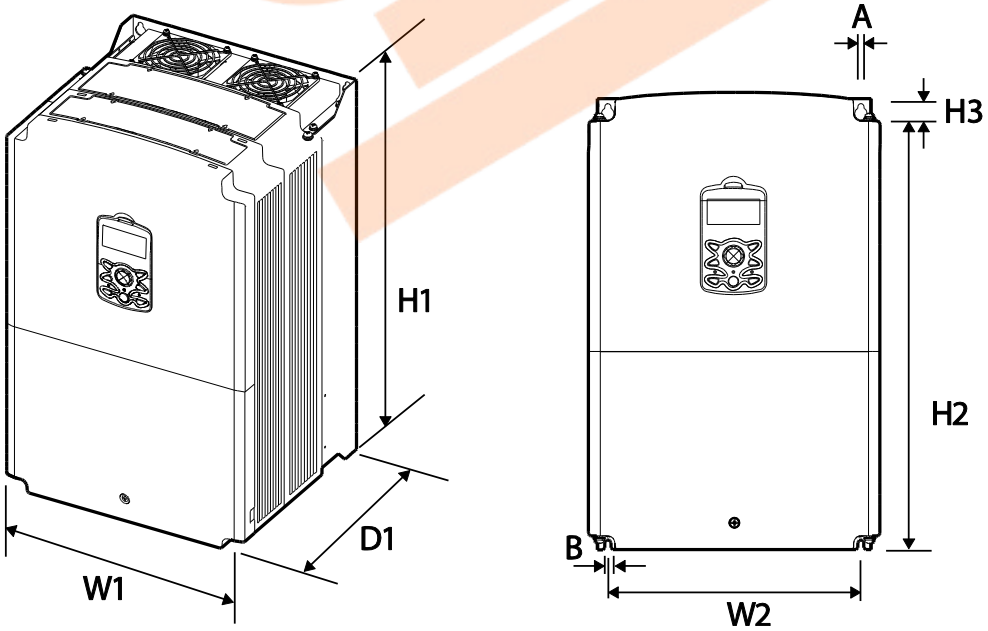

55–75 kW (3-Phase)

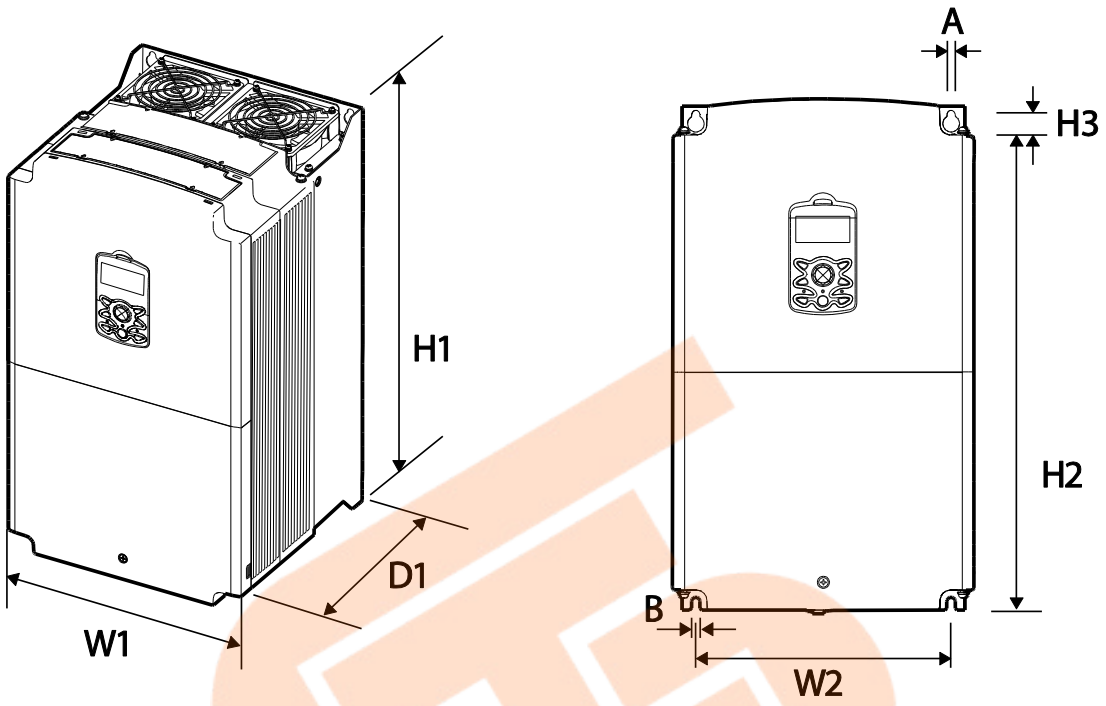

Items	W1	W2	H1	H2	H3	D1	A	B
0300S100-4	275 (10.8)	232	450 (17.7)	428.5	14	284 (11.2)	7 (0.28)	7 (0.28)
0370S100-4 0450S100-4	325 (12.8)	282	510 (20.1)	486.5	16			
0550S100-4 0750S100-4		275	550 (21.7)	524.5		309 (12.2)	9	9

Units: mm (inches)

11.3.3 IP66 Models

0.4-4.0kW (3-Phase) – NP (Non PDS) type

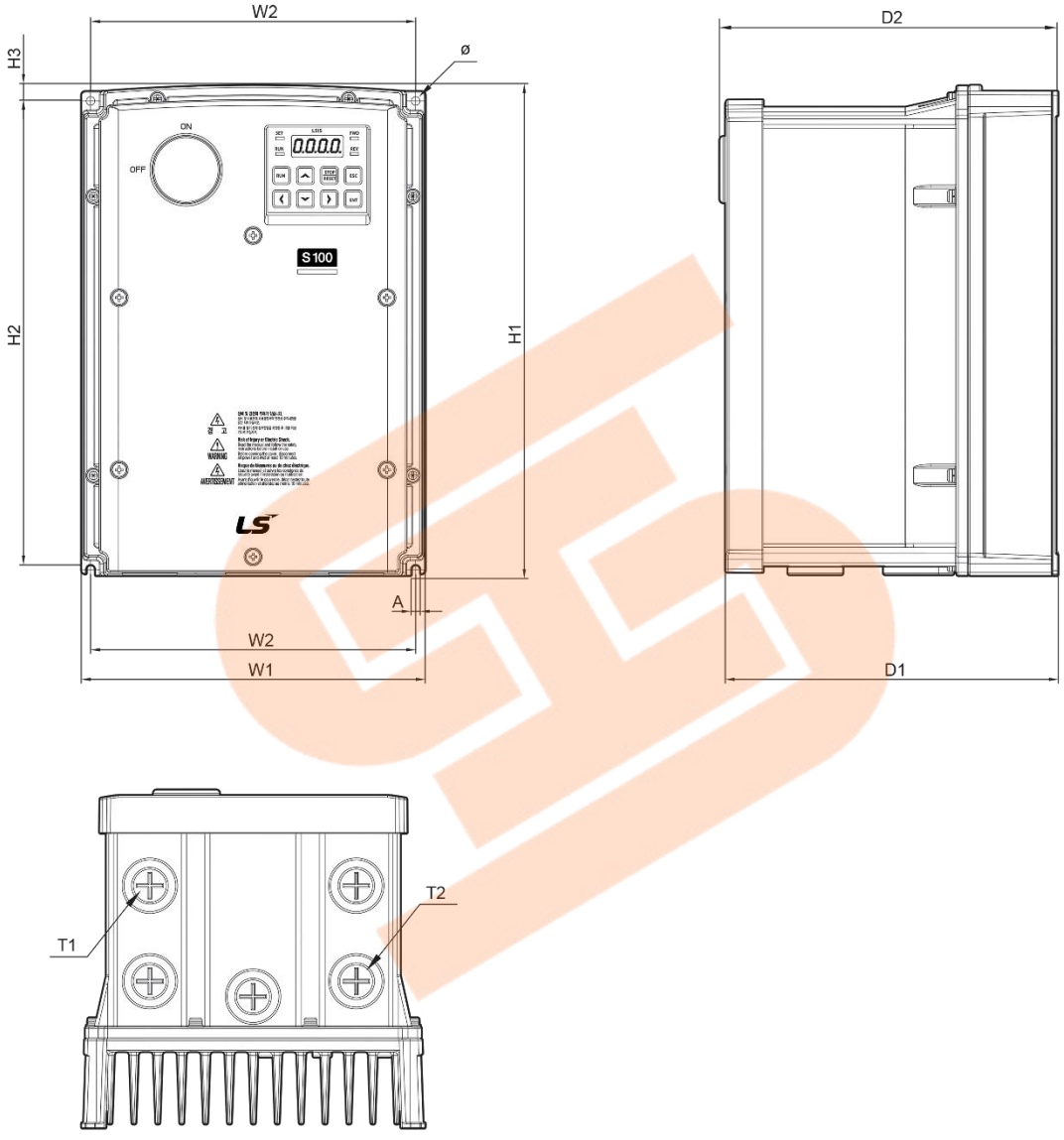

0.4-4.0kW (3-Phase) – PDS type

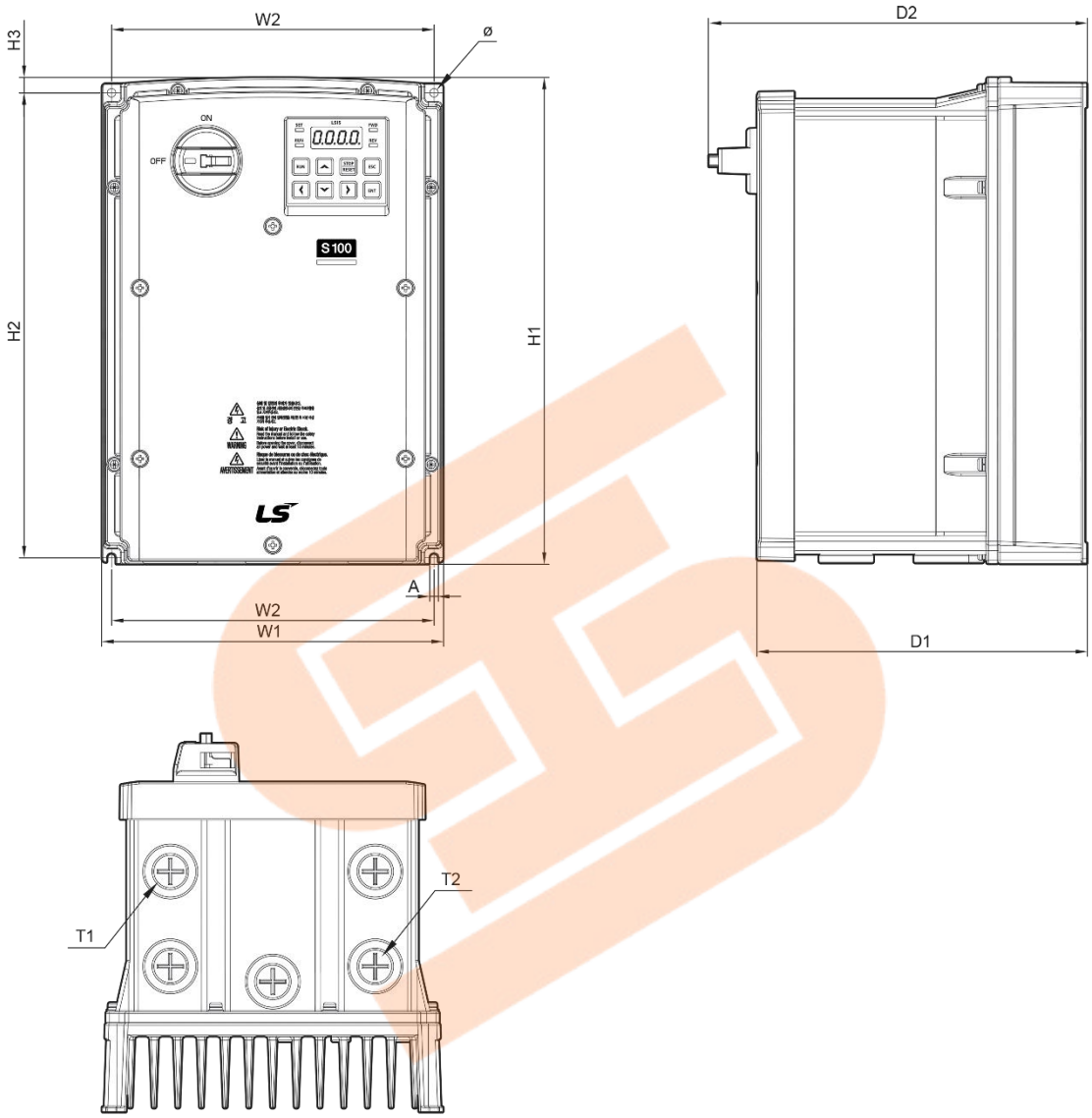

Items	W1	W2	H1	H2	H3	D1	D2	A	Φ	T1	T2
0004S100-1 0004S100-2 0008S100-2 0004S100-4 0008S100-4	180 (7.09)	170 (6.69)	256.6 (1010)	245 (9.65)	8.2 (0.32)	174.1 (6.85)	Non-PDS : 177.1 (6.97) PDS : 188.2 (7.41)	4.5 (0.18)	4.5 (0.18)	22.3 (0.88)	-
0008S100-1 0015S100-1 0022S100-1 0015S100-2 0022S100-2 0037S100-2 0040S100-2 0015S100-4 0022S100-4 0037S100-4 0040S100-4	220 (8.66)	204 (8.03)	258.8 (10.19)	241 (9.49)	11.8 (0.46)	201 (7.91)	Non-PDS : 204 (8.03) PDS : 215 (8.46)	5.5 (0.22)	5.5 (0.22)	22.3 (0.88)	28.6 (1.13)

Units: mm (inches)

5.5-7.5kW (3-Phase) – NP (Non PDS) type

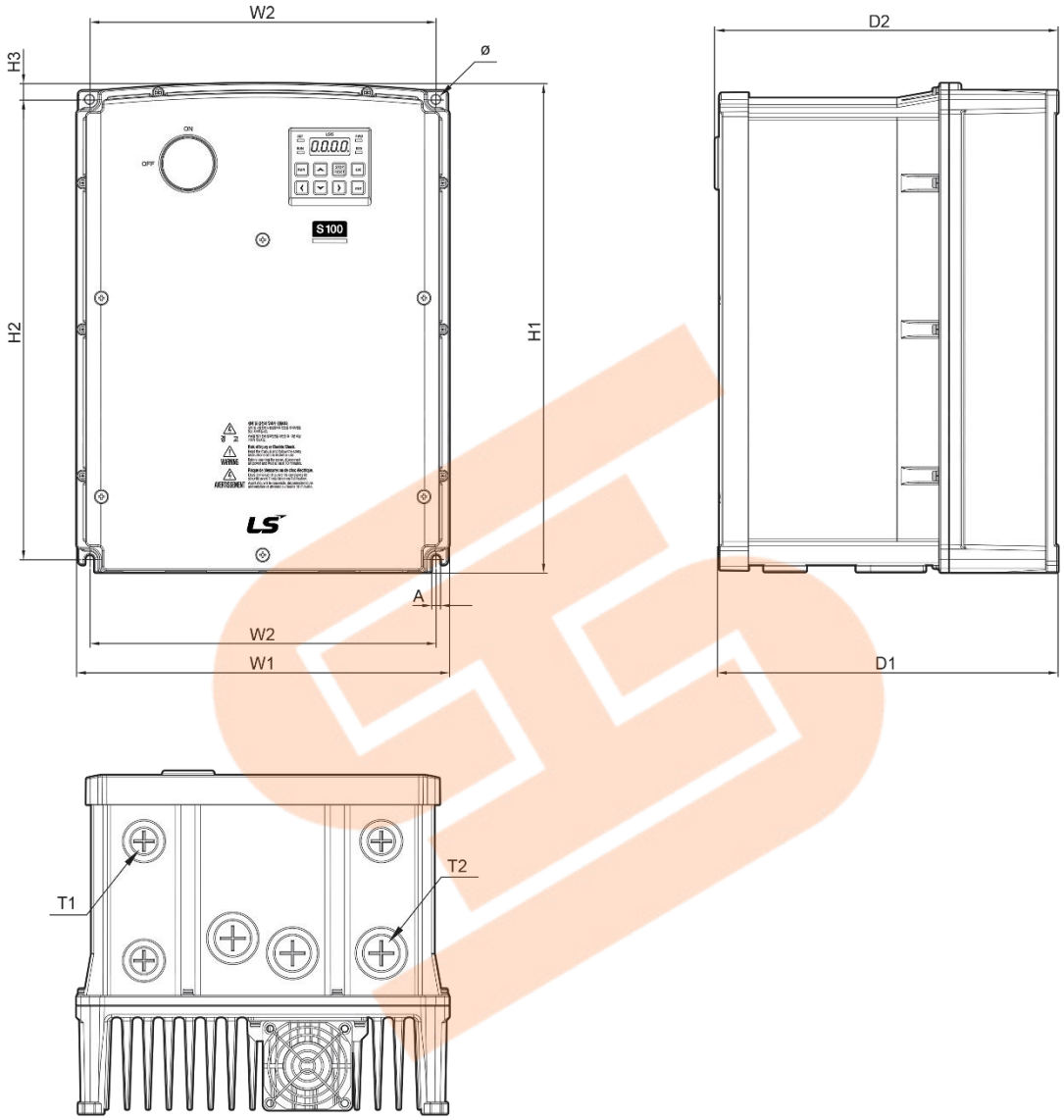

5.5-7.5kW (3-Phase) – PDS type

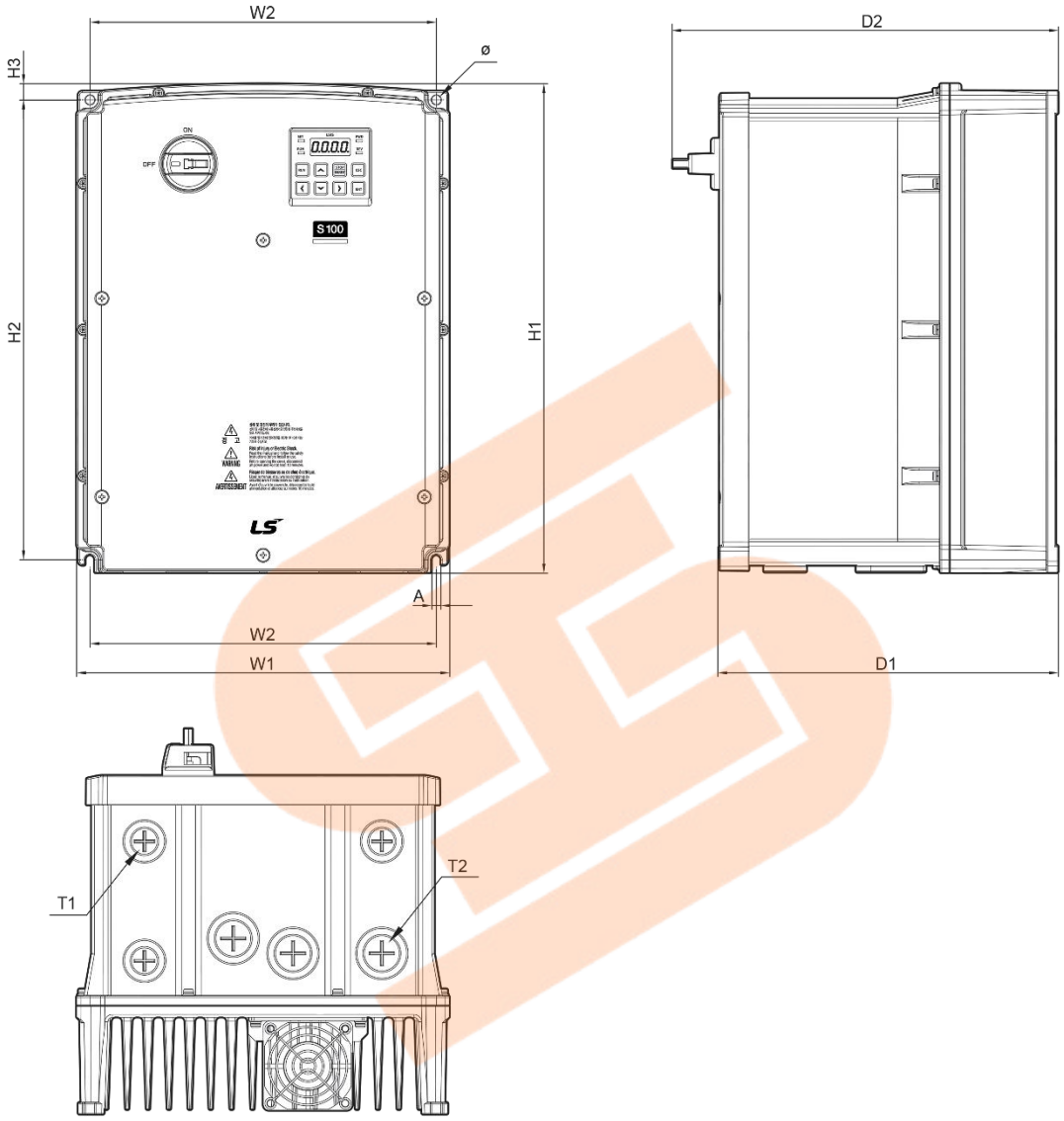

Items	W1	W2	H1	H2	H3	D1	D2	A	Φ	T1	T2
0055S100-2	250 (9.84)	232 (9.13)	328 (12.91)	308 (12.13)	11 (0.43)	227.2 (8.94)	Non-PDS : 230.1 (9.06) PDS: 241.2 (9.50)	6 (0.24)	6 (0.24)	22.3 (0.88)	28.6 (1.13)
0075S100-2											
0055S100-4											
0075S100-4											

Units: mm (inches)

11.0-22.0kW (3 Phase) – NP (Non PDS) type

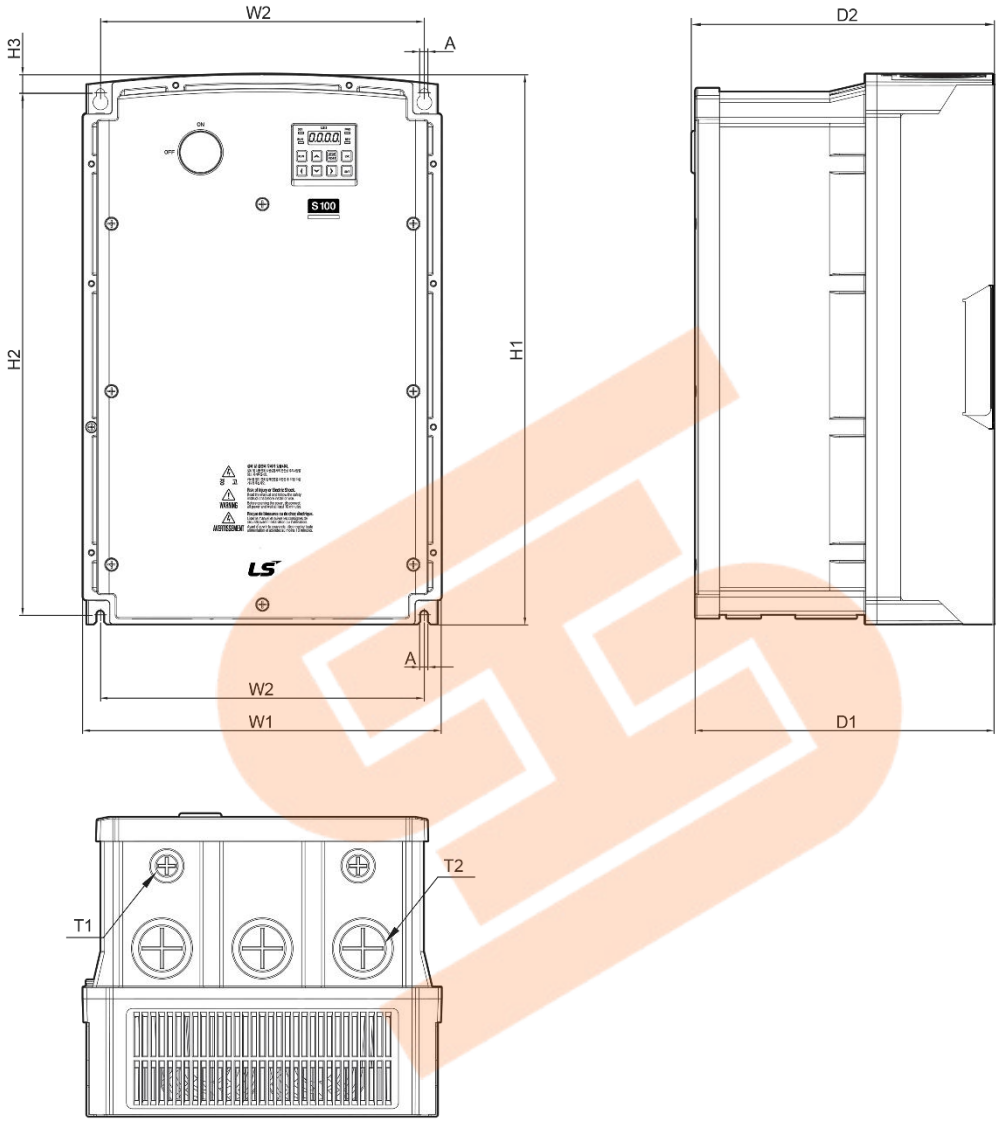

11.0-22.0kW (3 Phase) –PDS type

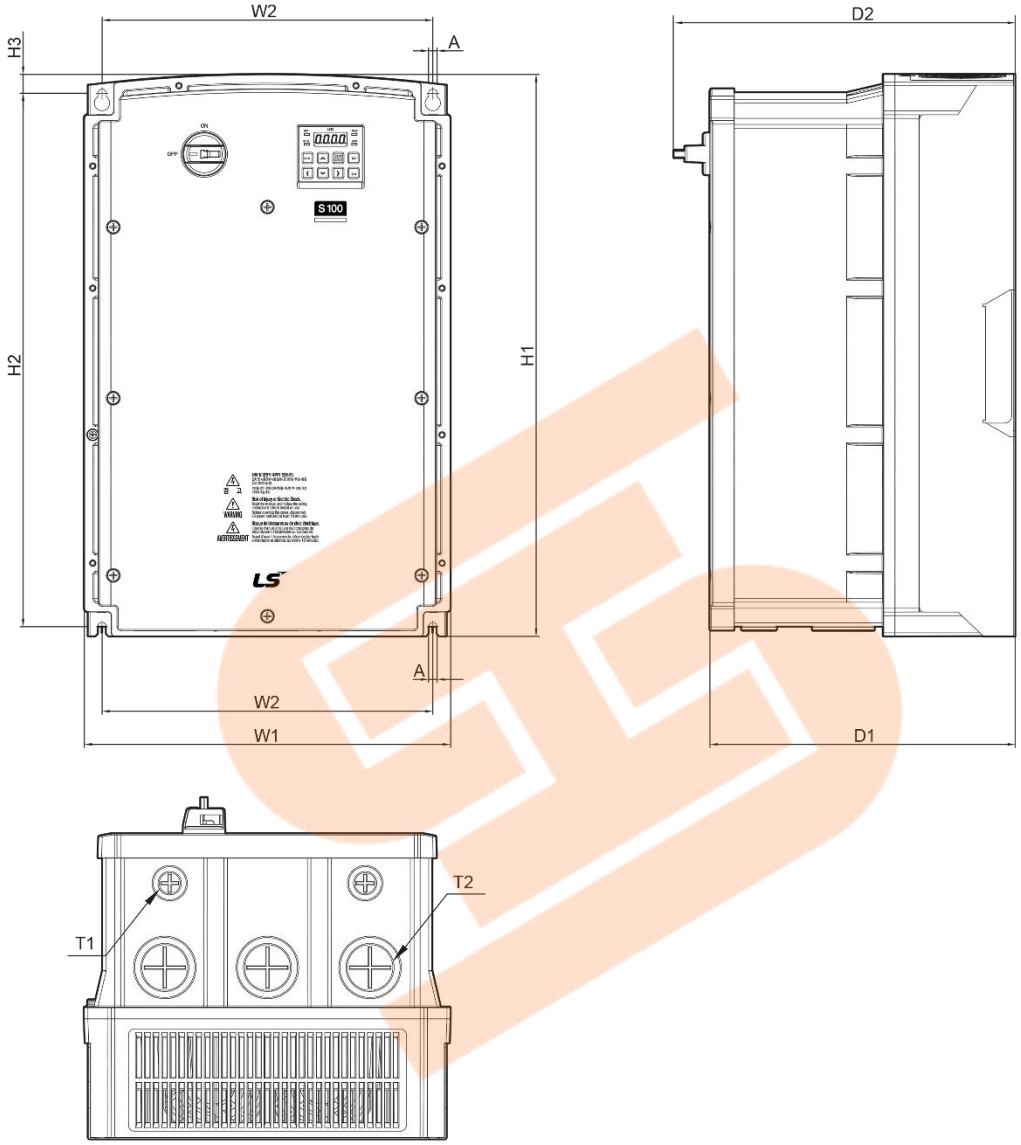

Items	W1	W2	H1	H2	H3	D1	D2	A	T1	T2
0110S100-2	260 (10.24)	229.2 (9.02)	399.6 (15.73)	377 (14.84)	14.6 (0.57)	245.4 (9.66)	Non-PDS : 248.5 (9.78) PDS : 259.6 (10.22)	6.5 (0.26)	22.3 (0.88)	34.9 (1.37)
0150S100-2										
0110S100-4										
0150S100-4										
0185S100-4	300 (11.81)	270.8 (10.66)	460 (18.11)	436.5 (17.19)	15.5 (0.61)	250 (9.84)	Non-PDS : 253.1 (9.96) PDS : 264 (10.39)	7 (0.28)	22.3 (0.88)	44.5 (1.75)
0220S100-4										

Units: mm (inches)

11.4 Peripheral Devices

11.4.1 0.4-22kW Models

Compatible Circuit Breaker, Leakage Breaker and Magnetic Contactor Models (manufactured by LS ELECTRIC)

Product (kW)		Circuit Breaker				Leakage Breaker		Magnetic Contactor	
		Model	Current (A)	Model	Current (A)	Model	Current (A)	Model	Current (A)
Single phase 200V	0.4	ABS33c	5	UTE100	15	EBS33c	5	MC-6a	9
	0.75		10				10	MC-9a, MC-9B	11
	1.5		15				15	MC-18a, MC-18B	18
	2.2		20		20		20	MC-22b	22
3-phase 200V	0.4	ABS33c	5	UTE100	15	EBS33c	5	MC-6a	9
	0.75		10				10	MC-9a, MC-9b	11
	1.5		15				15	MC-18a, MC-18b	18
	2.2		20		20		20	MC-22b	22
	3.7		30		30		30	MC-32a	32
	4								
	5.5	ABS53c	50		50	EBS53c	50	MC-50a	55
	7.5	ABS63c	60		60	EBS63c	60	MC-65a	65
	11	ABS103c	100		90	EBS103c	100	MC-85a	85
	15		125	UTS150	125		125	MC-130a	130

Product (kW)		Circuit Breaker				Leakage Breaker		Magnetic Contactor	
		Model	Current (A)	Model	Current (A)	Model	Current (A)	Model	Current (A)
3-phase 400V	0.4	ABS33c	3	UTE100	15	EBS33c	5	MC-6a	7
	0.75		5					MC-6a	
	1.5		10				10	MC-9a, MC-9b	9
	2.2							MC-12a, MC-12b	12
	3.7		15				15	MC-18a, MC-18b	18
	4		20		20		20		
	5.5		30		30		30	MC-22b	22
	7.5							MC-32a	32
	11	ABS53c	50		50	EBS53c	50	MC-50a	50
	15	ABS63c	60		60	EBS63c	60	MC-65a	65
	18.5	ABS103c	75		80	EBS103c	75	MC-75a	75
	22		100		90		100	MC-85a	85

11.4.2 30-75kW Models

Compatible Circuit Breaker, Leakage Breaker and Magnetic Contactor Models (manufactured by LS ELECTRIC)

Product(kW)	Circuit Breaker				Leakage Breaker		Magnetic Contactor	
	Model	Current (A)	Model	Current (A)	Model	Current (A)	Model	Current (A)
30 kW-4	ABS103c	125	UTS150	125	EBS 103c	125	MC-100a	105
37 kW-4	ABS203c	150		150	EBS203c	150	MC-130a	130
45 kW-4		175	UTS250	175		175	MC-150a	150
55 kW-4		225		225		225	MC-185a	185
75 kW-4	ABS403c	300	UTS400	300	EBS 403c	300	MC-225a	225

11.5 Fuse and Reactor Specifications

11.5.1 0.4-22kW Models

Product (kW)		AC Input Fuse		AC Reactor		DC Reactor	
		Current (A)	Voltage (V)	Inductance (mH)	Current(A)	Inductance (mH)	Current (A)
Single phase 200V	0.4	10	600	1.20	10	4	8.67
	0.75						
	1.5	15		0.88	14	3	13.05
	2.2	20		0.56	20	1.3	18.45
3-phase 200V	0.4	10		1.20	10	4	8.67
	0.75						
	1.5	15		0.88	14	3	13.05
	2.2	20		0.56	20	1.33	18.45
	3.7	32		0.39	30		26.35
	4	50					
	5.5	50		0.30	34	1.60	32
	7.5	63		0.22	45	1.25	43
	11	80		0.16	64	0.95	61
	15	100		0.13	79	0.70	75
3-phase 400V	0.4	10		4.81	4.8	16	4.27
	0.75						
	1.5			3.23	7.5	12	6.41
	2.2	15		2.34	10	8	8.9
	3.7	20		1.22	15	5.4	13.2
	4	32					
	5.5			1.12	19	3.20	17
	7.5	35		0.78	27	2.50	25
	11	50		0.59	35	1.90	32
	15	63		0.46	44	1.40	41
	18.5	70		0.40	52	1.00	49
	22	100		0.30	68	0.70	64

11.5.2 30-75kW Models

Product (kW)	AC Input Fuse		AC Reactor	
	Current (A)	Voltage (V)	Inductance(mH)	Current(A)
30 kW-4	125 A	600	0.29	69
37 kW-4			0.24	85
45 kW-4	160 A		0.20	100
55 kW-4	200 A		0.15	134
75 kW-4			0.13	160

Caution

Only use Class H or RK5, UL listed input fuses and UL listed circuit breakers. See the table above for the voltage and current ratings for fuses and circuit breakers.

Attention

Utiliser UNIQUEMENT des fusibles d'entrée homologués de Classe H ou RK5 UL et des disjoncteurs UL. Se reporter au tableau ci-dessus pour la tension et le courant nominal des fusibless et des disjoncteurs.

11.6 Terminal Screw Specification

11.6.1 Input/Output Terminal Screw Specification

11.6.1.1 0.4-22kW Models

Product (kW)		Terminal Screw Size	Screw Torque (Kgf·cm/Nm)
Single phase 200V	0.4	M3.5	8.2~10.2 / 0.8~1.0
	0.75		
	1.5		
	2.2	M4	12.2~14.3 / 1.2~1.4
3-phase 200V	0.4	M3.5	8.2~10.2 / 0.8~1.0
	0.75		
	1.5		
	2.2		
	3.7	M4	12.2~14.3 / 1.2~1.4

Product (kW)		Terminal Screw Size	Screw Torque (Kgf·cm/Nm)
	4		
	5.5		
	7.5		
	11	M5	20.4~24.5 / 2.0~2.4
	15		
3-phase 400V	0.4	M3.5	8.2~10.2 / 0.8~1.0
	0.75		
	1.5		
	2.2		
	3.7	M4	12.2~14.3 / 1.2~1.4
	4		
	5.5		
	7.5		
	11	M5	20.4~24.5 / 2.0~2.4
	15		
	18.5		
	22		

11.6.1.2 30-75kW Models

Product (kW)	Terminal Screw Size	Screw Torque (Kgf·cm/Nm)
30-75 kW	M8	56.1~67.3 / 5.5~6.6

11.6.2 Control Circuit Terminal Screw Specification

11.6.2.1 0.4-22kW Models

Terminal	Terminal Screw Size	Screw Torque (Kgf·cm/Nm)
P1-P7/ CM/VR/V1/I2/AO/Q1/EG/24/TI /TO/ SA,SB,SC/S+,S-,SG	M2	2.2-2.5/0.22-0.25
A1/B1/C1	M2.6	4.0/0.4

* Standard I/O doesn't support P6/P7/TI/TO terminal. Refer to *Step 4 Control Terminal Wiring* on page *36*.

11.6.2.2 30-75kW Models

Terminal	Terminal Screw Size	Screw Torque (Kgf·cm/Nm)
P1~P7/CM/VR/V1/I2/AO1/AO 2/Q1/EG/24/TI/TO/SA,SB,SC/ S+,S-,SG/A1,B1,C1/A2,C2	M2.6	0.4

Caution

Apply the rated torque when tightening terminal screws. Loose screws may cause short circuits and malfunctions. Overtightening terminal screws may damage the terminals and cause short circuits and malfunctions. Use copper conductors only, rated at 600V, 75℃ for power terminal wiring, and rated at 300V, 75℃ for control terminal wiring.

Attention

Appliquer des couples de marche aux vis des bornes. Des vis desserrées peuvent provoquer des courts-circuits et des dysfonctionnements. Ne pas trop serrer la vis, car cela risque d'endommager les bornes et de provoquer des courts-circuits et des dysfonctionnements. Utiliser uniquement des fils de cuivre avec une valeur nominale de 600 V, 75 ℃ pour le câblage de la borne d'alimentation, et une valeur nominale de 300 V, 75 ℃ pour le câblage de la borne de commande.

11.7 Dynamic Braking Unit(DBU) and Resistors

11.7.1 Brake Resistor Specification (0.4-22kW)

Product (kW)		Resistance (Ω)	Rated Capacity (W)
Single phase 200V	0.4	300	100
	0.75	150	150
	1.5	60	300
	2.2	50	400
3-phase 200V	0.4	300	100
	0.75	150	150
	1.5	60	300
	2.2	50	400
	3.7	33	600
	4	33	600
	5.5	20	800
	7.5	15	1,200
	11	10	2,400
	15	8	2,400
3-phase 400V	0.4	1,200	100
	0.75	600	150
	1.5	300	300
	2.2	200	400
	3.7	130	600
	4	130	600
	5.5	85	1,000
	7.5	60	1,200
	11	40	2,000
	15	30	2,400
	18.5	20	3,600
	22	20	3,600

- The standard for braking torque is 150% and the working rate (%ED) is 5%. If the working rate is 10%, the rated capacity for braking resistance must be calculated at twice the standard.

11.7.2 Dynamic Braking Unit (30-75kW)

UL form	Capacity of applied motor	Braking unit	Terminal arrangement & Dimensions
UL type	30-37kW	SV370DBU-4U	Refer to Group 1.
	45-55kW	SV550DBU-4U	
	75kW	SV750DBU-4U	
Non UL type	45-75kW	SV075DB-4	Refer to Group 2.
	30-37kW	LSLV0370DBU-4HN	Refer to Group 3.
		LSLV0370DBU-4LN	Refer to Group 4.
	45-75kW	LSLV0750DBU-4LN	
		LSLV0750DBU-4HN	Refer to Group 3.

Note

- It is not necessary to use option type dynamic braking unit for S100 below 22kW capacity because basically the dynamic braking unit is built in.
- You must refer to dynamic braking unit manual for usage recommended dynamic braking unit in the table above due to changeable table.

11.7.3 Terminal arrangement

Group 1:



Group 2:



Terminals	Functions
G	Ground Terminal
B2	Terminal for connection with B2 of DBU
B1	Terminal for connection with B1 of DBU
N	Terminal for connection with N of Inverter
P	Terminal for connection with P1 of Inverter

Group 3:

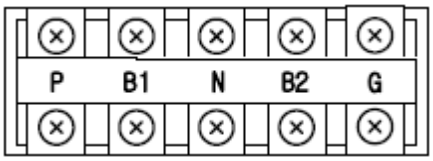

Terminals	Functions
G	Ground Terminal
B2	Terminal for connection with B2 of DBU
B1	Terminal for connection with B1 of DBU
N	Terminal for connection with N of Inverter
P	Terminal for connection with P1 of Inverter

Group 4,5:

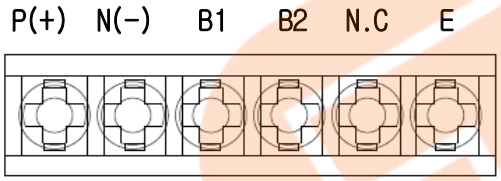

Terminals	Functions
P(+)	Terminal for connection with P of Inverter
N(-)	Terminal for connection with N of Inverter
B1	Terminal for connection with B1 of DBU
B2	Terminal for connection with B2 of DBU
N.C	Unused
E	Ground Terminal

Note

- You must refer to dynamic braking unit manual for choice the brake resistor to use the dynamic braking unit.
- For detailed information on DBU wiring, refer to *2.2 Cable Wiring, Step 7 Selecting the brake unit (30-75kW models only)* on page *52*.

11.7.4 Dynamic Braking Unit Dimensions

Group1

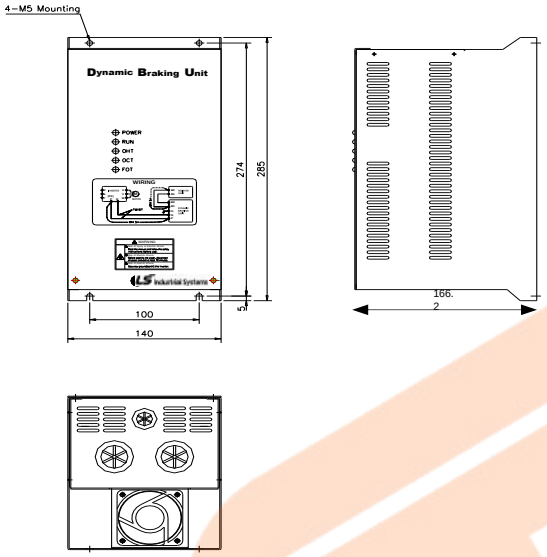

Group 2

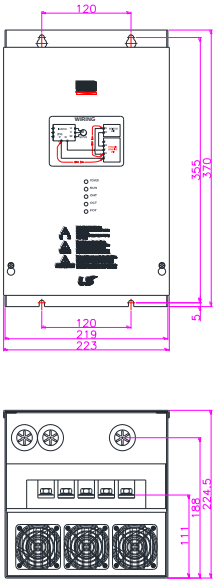

Group 4

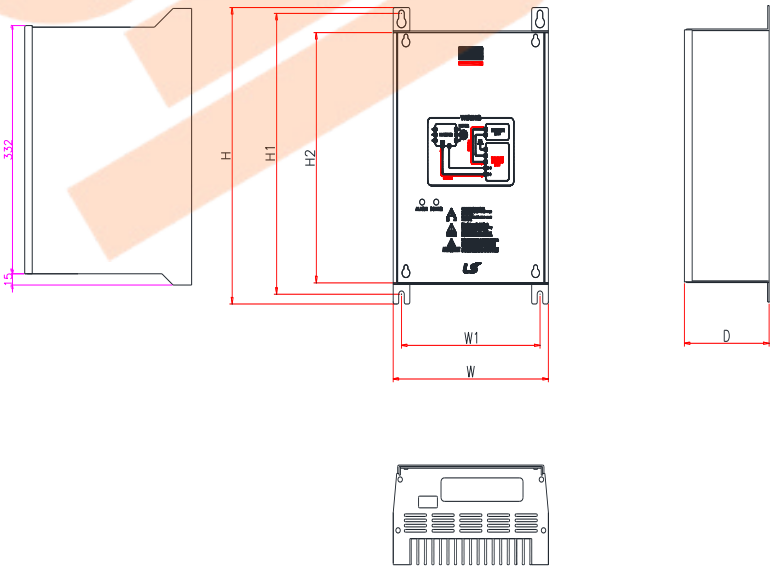

Voltage (V)	Capacity of applied motor(kW)	Dimension (mm)				Hole position for installation (mm)		Weight (kg)	Hole size for installation (ϕ)
		W	H	H2	D	W1	H1		
440	30~37	140	227.4	192	76.4	125	215.4	1.56	M4
	45~75							1.85	

Group 3

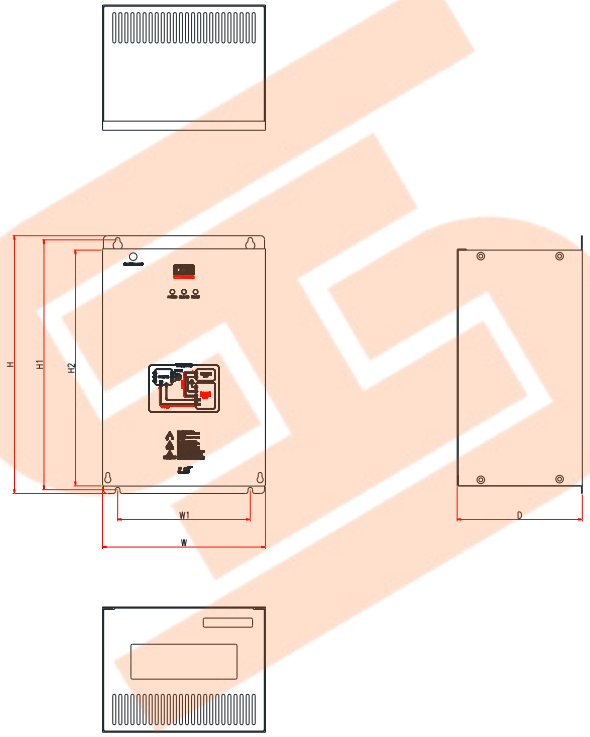

Voltage (V)	Capacity of applied motor(kW)	%ED	Dimension (mm)				Hole position for installation (mm)		Weight (kg)	Hole size for installation (ϕ)
			W	H	H2	D	W1	H1		
440	30~37	50	140	227.4	192	76.4	125	215.4	1.56	M4

11.7.5 Display Functions

DB Resistors connect with B1, B2 of DB Unit. DBU has 3 LEDs. Red LED which is located in middle displays supplying main power, one Green LED which is right side displays under braking and another green LED which is left side displays Over Heat Trip(OHT).

Displays	Function description
POWER (Red LED)	POWER LED is turned On when main power is supplied.Generally, POWER LED is turn On while main power supplied because DBU is connected with inverter.
RUN (Green LED)	RUN LED is turned off while DBU is ON by regenerative energy of Motor.
OHT (Green LED)	Under Braking, if the temperature is exceeded over setting value due to over heat of Heatsink, Cut the TURN ON signal of DBU and LED is turn on by working overheat protection function.

11.7.6 Dynamic Braking Unit Resistors

Product(kW)	DB Unit	Resistor(Ω)	Capacity(W)	Reference
30kW	SV370DBU-4U	16.9	6,400	100% braking torque, 10%ED
37kW	SV370DBU-4U	16.9	6,400	
45kW	SV550DBU-4U	11.4	9,600	
55kW	SV550DBU-4U	11.4	9,600	
75kW	SV750DBU-4U	8.4	12,800	

Note

- The resistance/rated capacity/braking torque/%ED of DB Resistor are valid only for the DB unit of type A and the values of DB Resistor for type B and C refer to the manual of DB Unit..
- Rating Watt of DBU has to be doubled when %ED is doubled.

11.8 Continuous Rated Current Derating

Carrier Frequency Setting Range and Default Values (by product capacity)

Refer to the following graphs for carrier frequency ranges and default values by product capacity.

Capacity	Heavy Duty					Normal Duty				
	Setting Range				Default Values	Setting Range				Default Values
	V/F		S/L			V/F		S/L		
	Min.	Max.	Min.	Max.		Min.	Max.	Min.	Max.	
0.4-4.0kW	2	15	2	15	3	2	5	2	5	2
5.5-22kW	1	15	2	15		1	5	2	5	
30-45kW	1	10	2	10		1	5	2	5	
55/75kW	1	7	2	7		1	3	2	3	

Continuous Rated Current Derating by Carrier Frequency

The continuous rated current of the inverter is limited based on the carrier frequency. Refer to the following graph.

Continuous Rated Current Graph (0.4-22kW Heavy Duty)

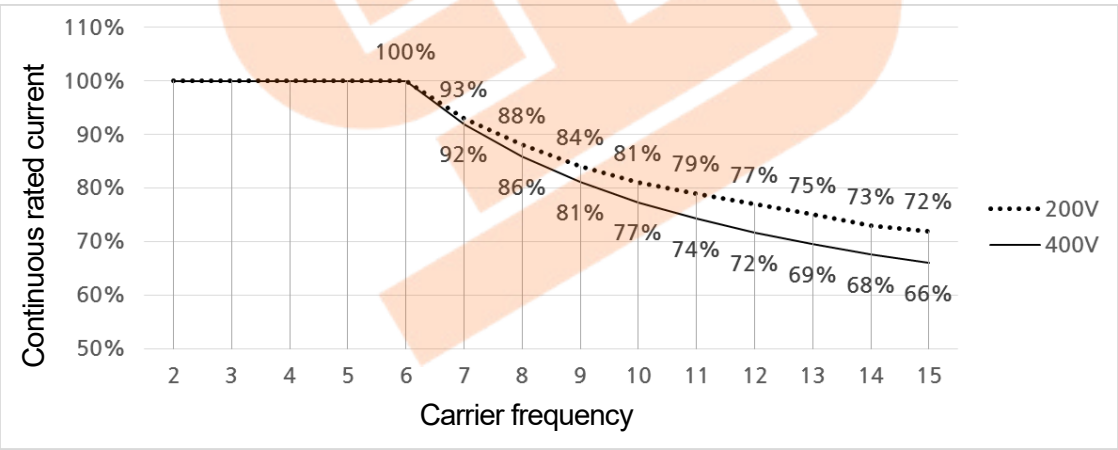

Continuous Rated Current Graph (30-75kW Heavy Duty)

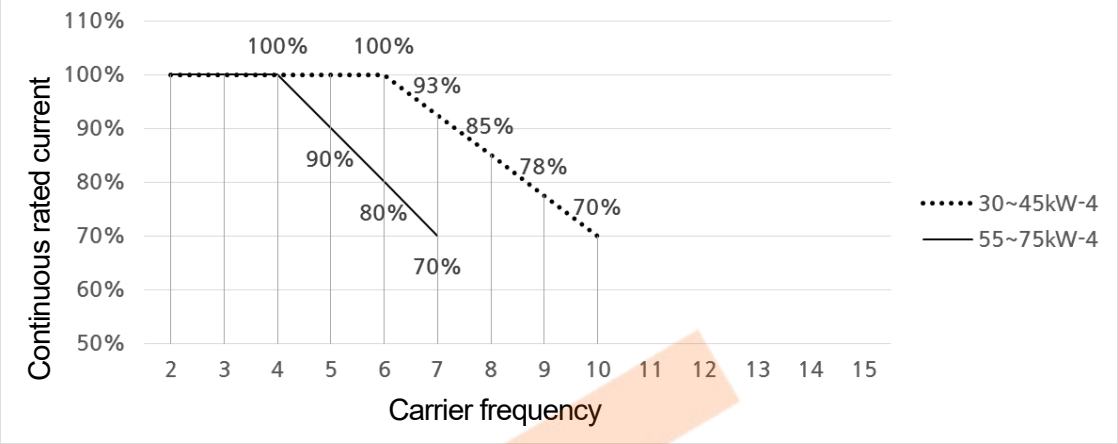

Continuous Rated Current Graph (0.4-75kW Normal Duty)

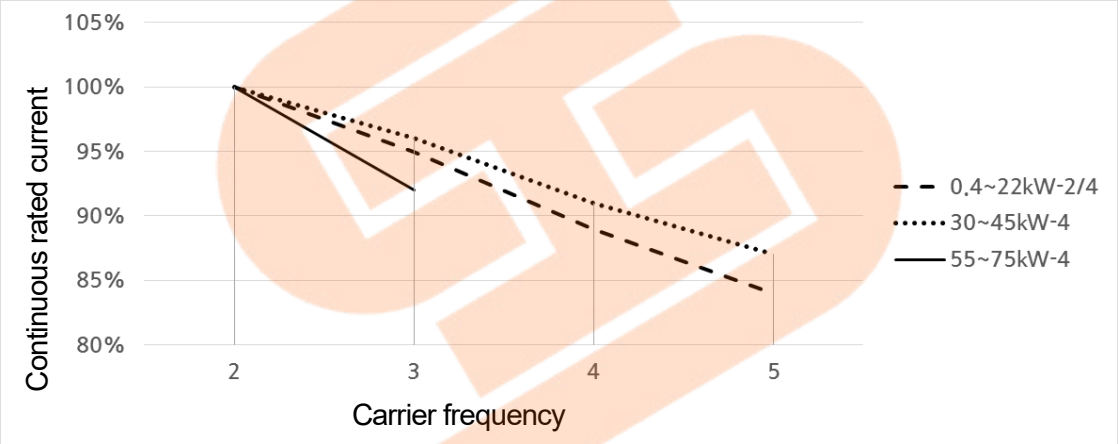

Capacity (kW)	DR (%)	Capacity (kW)	DR (%)	Capacity (kW)	DR (%)
0.4kW-2	85%	15kW-2	90%	11kW-4	85%
0.8kW-2	88%	0.4kW-4	74%	15kW-4	84%
1.5kW-2	88%	0.8kW-4	85%	18.5kW-4	92%
2.2kW-2	94%	1.5kW-4	84%	22kW-4	83%
3.7kW-2	92%	2.2kW-4	85%	30kW-4	86%
4.0kW-2	96%	3.7kW-4	85%	37kW-4	87%
5.5kW-2	85%	4.0kW-4	93%	45kW-4	89%
7.5kW-2	85%	5.5kW-4	81%	55kW-4	83%
11kW-2	87%	7.5kW-4	77%	75kW-4	92%

* DR (%) includes maximum carrier frequency values by product capacity.

Continuous Rated Current Derating by Input Voltage

The continuous rated current of the inverter is limited based on the input voltage. Refer to the following graph.

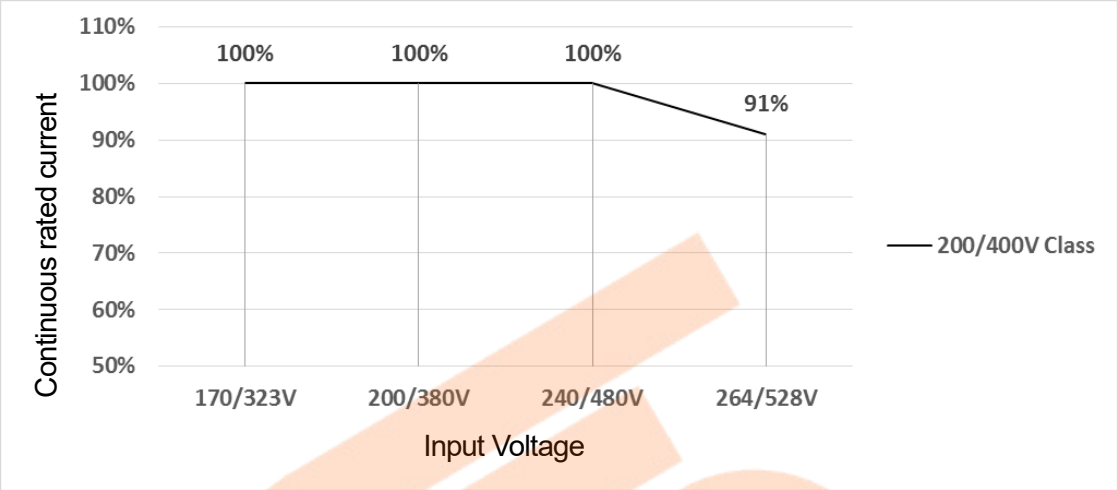

Continuous Rated Current Derating by Ambient Temperature and Installation Type

The constant-rated current of the inverter is limited based on the ambient temperature and installation type. Refer to the following graph. A side-by-side operation is only available with 0.4-22kW IP20.

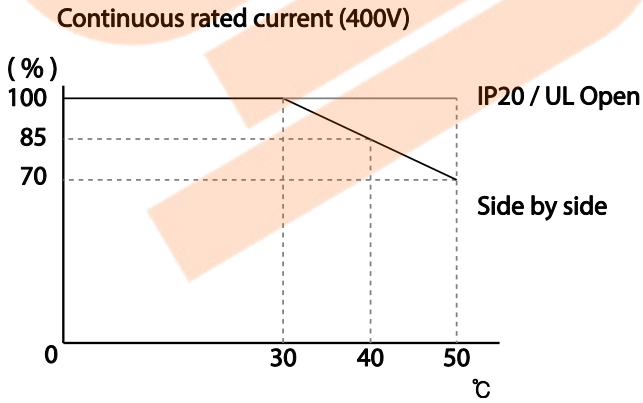

11.9 Heat Emmission

The following graph shows the inverters' heat emission characteristics (by product capacity).

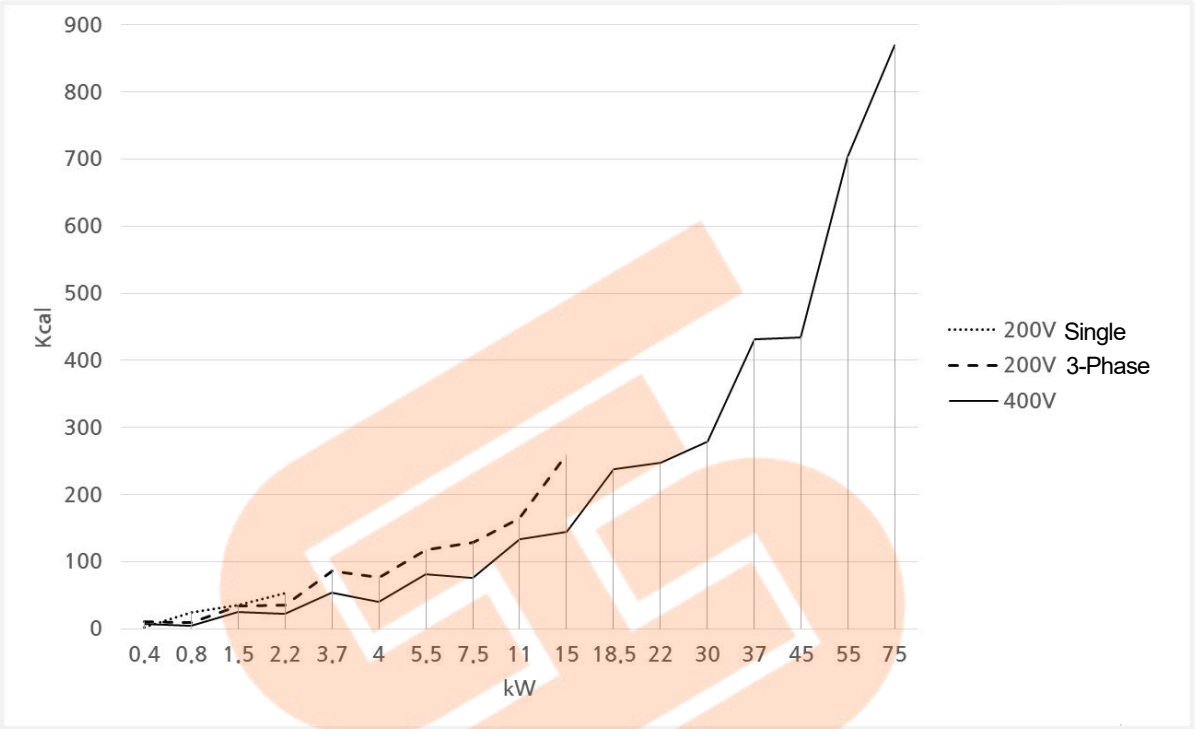

Capacity	Heat Emmission(Kcal)	Capacity	Heat Emmission(Kcal)	Capacity	Heat Emmission(Kcal)
0.4kW-1	3	7.5kW-2	128	11kW-4	133
0.8kW-1	25	11kW-2	164	15kW-4	145
1.5kW-1	36	15kW-2	260	18.5kW-4	238
2.2kW-1	53	0.4kW-4	7	22kW-4	247
0.4kW-2	10	0.8kW-4	4	30kW-4	280
0.8kW-2	9	1.5kW-4	24	37kW-4	432
1.5kW-2	34	2.2kW-4	22	45kW-4	434
2.2kW-2	36	3.7kW-4	54	55kW-4	703
3.7kW-2	86	4.0kW-4	40	75kW-4	869
4.0kW-2	77	5.5kW-4	82		
5.5kW-2	118	7.5kW-4	75		

Heat emission data is based on operations with default carrier frequency settings, under normal operating conditions.

11.10 Remote Option

The composition consists of a remote control loader and cables(1m,2m,3m,5m).

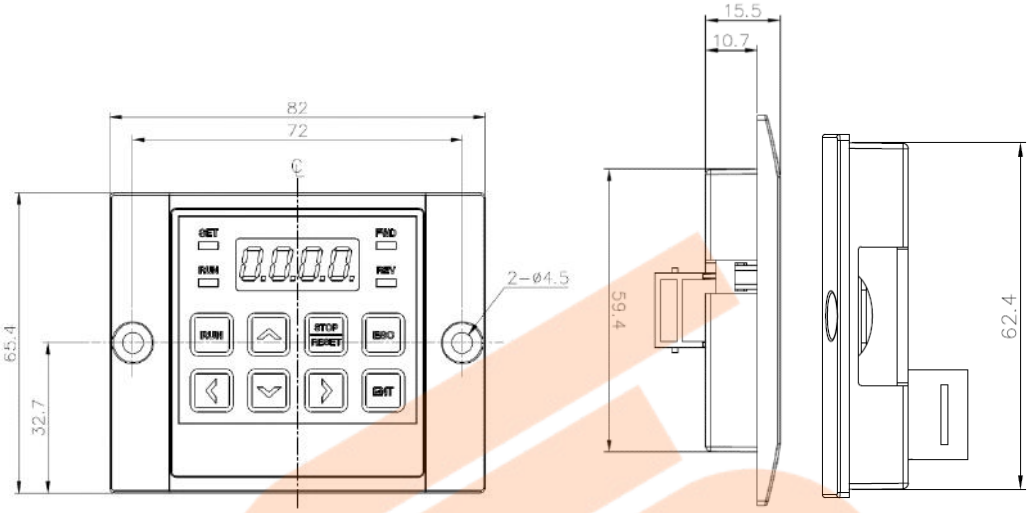

Scale : mm

Installation.

4 Take off the top cover of the I/O board kit and remove the hole cover to connect remote cable on the side.

5 Connect the other side of the remote cable to the remote keypad as shown below.

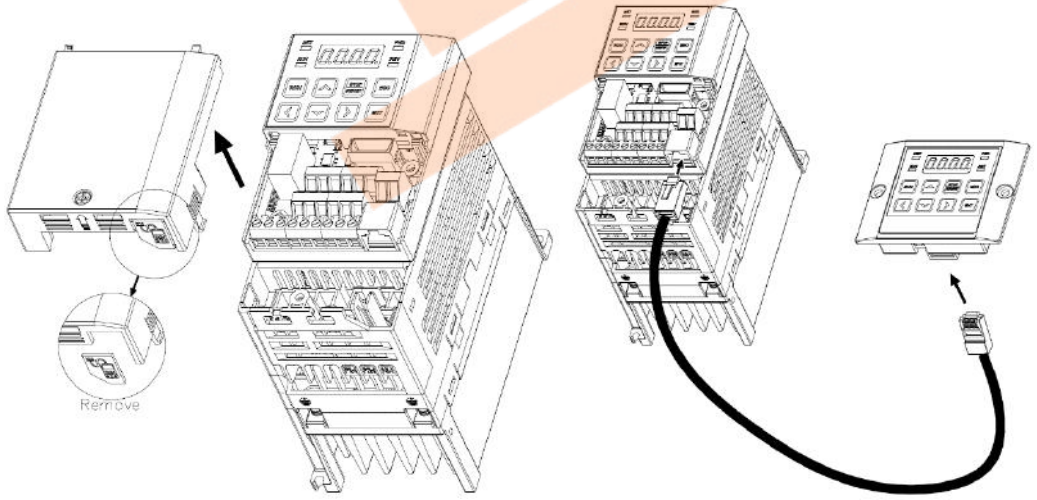

12 Applying Drives to Single-Phase Input Application

12.1 Introduction

LSLV-S100 is a three-phase standard variable frequency drive(VFD). When applying single-phase power to a three-phase VFD, there are several constraints that need to be considered. Standard Pulse-Width-Modulated (PWM) VFDs use a 6-pulse diode rectifier. The 6-pulse rectification results in 360 Hz DC bus ripple when used with a three-phase 60 Hz supply.

However, under single-phase use, the DC bus ripple becomes 120 Hz and the VFDs DC bus circuit is subject to higher stress in order to deliver equivalent power.

Additionally, input currents and harmonics increase beyond those encountered with three-phase input.

Input current distortion of 90% THD and greater can be expected under single-phase input, compared to approximately 40% with three-phase input as indicated in Figure 2.

Therefore, single-phase use requires the three-phase VFD power rating be reduced (derated) to avoid over stressing the rectifier and DC link components.

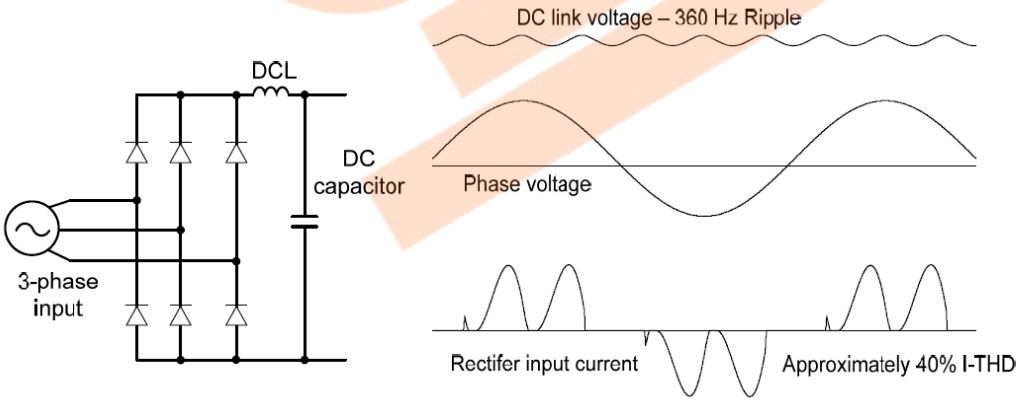

Figure-1 Typical Three-Phase Configuration

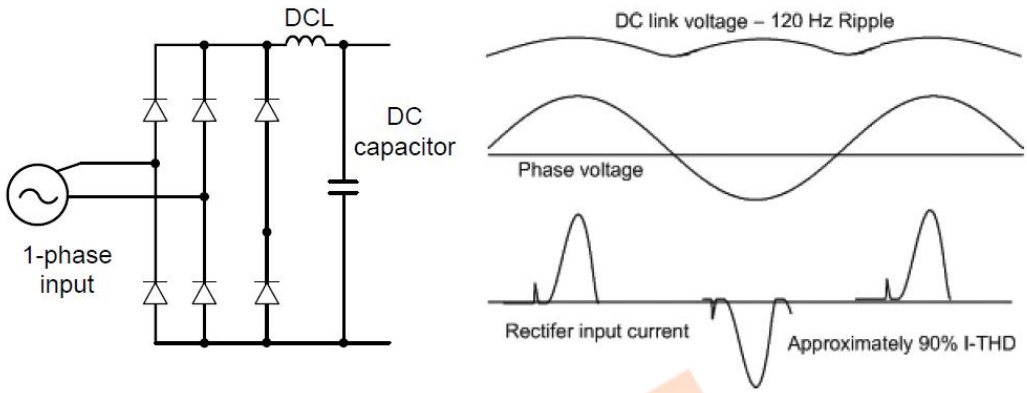

Figure-2 Typical Single-Phase Configuration

12.2 Power(HP), Input Current and Output Current

When using a three-phase VFD with single-phase input, derating the drive's output current and horsepower will be necessary because of the increase in DC bus ripple voltage and current. In addition, the input current through the remaining two phases on the diode bridge converter will approximately double, creating another derating consideration for the VFD. Input current harmonic distortion will increase beyond that with a three-phase supply making the overall input power factor low. Input current distortion over 100% is likely under single-phase conditions without a reactor. Therefore, the reactor is always required. When using a motor that is selected by the three-phase drive rating criteria when using single-phase input, it may result in poor performance, premature drive failure. The selected drive of single-phase current ratings must meet or exceed the motor current rating.

12.3 Input Frequency and Voltage Tolerance

The single-phase current ratings are valid for 60Hz input only. The AC supply voltage must be within the required voltage range of 240/480Vac +10% to –5% to maximize motor power production. Standard product with three-phase voltage input has an allowable range of +10% to –15%. Therefore, a stricter input voltage tolerance of +10 to –5% applies when using the drive with a single-phase supply. The average bus voltage with single-phase input is lower than the equivalent of a three-phase input. Therefore, the maximum output voltage (motor voltage) will be lower with a single-phase input. The minimum input voltage must be no less than 228Vac for 240 volt models and 456Vac for 480 volt models, to ensure motor voltage production of 207Vac and 415Vac, respectively. Thus, if full motor torque must be developed near base speed (full power) it will be necessary to maintain a rigid incoming line voltage so that adequate motor voltage can be produced. Operating a motor at reduced speed (reduced power), or using a motor with a base voltage that is lower than the incoming AC supply rating (ex. 208Vac motor with a 240Vac supply), will also minimize the effect of voltage deprivation. (240VAC Input →208V motor, 480VAC Input → 400V motor)

13 Safety Function STO(Safe Torque Off)

The S100 Inverter series provides resilient safety features with optional safety expansion module. When an emergency occurs, it instantly blocks inverter output to protect the operator and reduce the risk.

13.1 Safety Standard Product

The performance levels for the safety function are as follows.

EN ISO 13849-1: Category 3, PL Class d

EN 61800-5-2 (2007): SIL 2 (EN 60204-1, Stop Category 0)

PFH : 1.2123 x10^{-7}

Caution

When using the safety function, perform a risk assessment for the system and ensure that it meets the safety requirements.

Note

When wiring the inverter or performing maintenance, the inverter must be turned off. The safety function is not used to block the power supply to the motor or insulate the inverter electrically.

13.2 About the Safety Function

The safety function is a safety torque off (STO) function used to prevent a torque and to block the power supply to the motor by interrupting the gate using hard wires.

STO (Safety Torque Off): IEC61800-5-2

The STO function is independently connected to each input signal for 2 channels (SA) and (SB). The connected circuit cuts off the operation signal for the inverter output and turns off the power modules.

If the safety function is activated during operation, the inverter blocks the output and the motor enters Free Run mode. Also, the “Safety Err” message is displayed on the keypad.

To release the fault trip, short-circuit terminal block to return to the normal operation status

and press the [STOP/RESET] key.

13.3 Safety Function Wiring Diagram

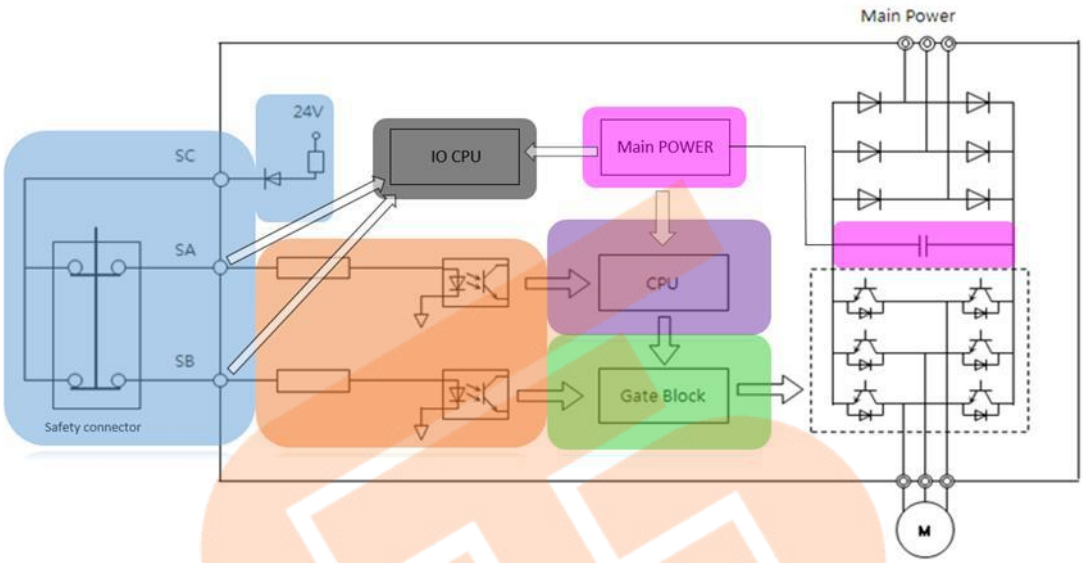

13.4 Safety Function Terminal Description

Function	Label	Name	Description
Safety functionality configuration	SA	Safety input A	Used to block the output from the inverter in an emergency. Conditions: • Normal Operation: Both the SA and SB terminals are connected to the SC terminal. • Output Block: One or both of the SA and SB terminals lose connection with the SC terminal.
	SB	Safety input B	
	SC	Safety input power source	DC 24V, < 25mA

Product Warranty

Warranty Information

Fill in this warranty information form and keep this page for future reference or when warranty service may be required.

Product Name	LS ELECTRIC Standard Inverter	Date of Installation	
Model Name	LSLV-S100	Warranty Period	
Customer Info	Name (or company)		
	Address		
	Contact Info.		
Retailer Info	Name		
	Address		
	Contact info.		

Warranty Period

The product warranty covers product malfunctions, under normal operating conditions, for 12 months from the date of installation. If the date of installation is unknown, the product warranty is valid for 18 months from the date of manufacturing. Please note that the product warranty terms may vary depending on purchase or installation contracts.

Warranty Service Information

During the product warranty period, warranty service (free of charge) is provided for product malfunctions caused under normal operating conditions. For warranty service, contact an official LS ELECTRIC agent or service center.

Non-Warranty Service

A service fee will be incurred for malfunctions in the following cases:

- intentional abuse or negligence
- power supply problems or from other appliances being connected to the product
- acts of nature (fire, flood, earthquake, gas accidents etc.)
- modifications or repair by unauthorized persons
- missing authentic LS ELECTRIC rating plates
- expired warranty period

Visit Our Website

Visit us at ***https://www.ls-electric.com*** for detailed service information.

EC DECLARATION OF CONFORMITY

We, the undersigned,

Representative:	**LS ELECTRIC Co., Ltd.**
Address:	**LS Tower, 127, LS-ro, Dongan-gu, Anyang-si, Gyeonggi-do, Korea**
Manufacturer:	**LS ELECTRIC Co., Ltd.**
Address:	**56, Samseong 4-gil, Mokcheon-eup, Dongnam-gu, Cheonan-si, Chungcheongnam-do, Korea**

Certify and declare under our sole responsibility that the following apparatus:

Type of Equipment:	**Inverter (Power Conversion Equipment)**
Model Name:	**LSLV-S100 series**
Trade Mark:	**LS ELECTRIC Co.,Ltd.**

This declaration of conformity is under the sole responsibility of the manufacturer.

Conforms to the essential requirements of the directives:

2014/30/EU Directive of the European Parliament and of the Council on the harmonization of the laws of the Member States relating to electromagnetic compatibility.

2014/35/EU Directive of the European Parliament and of the Council on the harmonization of the laws of the Member States relating to the making available on the market of electrical equipment designed for use within certain voltage limits.

2011/65/EU Directive on the restriction of the use certain of certain Hazardous Substances in electrical and electronic equipment –RoHs.-

Based on the following specifications applied:

EN IEC 61800-3:2018
EN 61800-5-1:2007+A1:2017+ A11:2021
EN IEC 63000:2018

and therefore, complies with the essential requirements and provisions of the 2014/30/EU, 2014/35/EU and 2011/65/EU Directives.

Place: **Cheonan, Chungnam, Korea**

박 창 근 2022. 8. 16 (Signature / Date)

Mr. PARK CHANGKEUN / Manager

UL mark



The UL mark applies to products in the United States and Canada. This mark indicates that UL has tested and evaluated the products and determined that the products satisfy the UL standards for product safety. If a product received UL certification, this means that all components inside the product had been certified for UL standards as well.

Suitable for Installation in a compartment Handing Conditioned Air

CE mark



The CE mark indicates that the products carrying this mark comply with European safety and environmental regulations. European standards include the Machinery Directive for machine manufacturers, the Low Voltage Directive for electronics manufacturers and the EMC guidelines for safe noise control.

Low Voltage Directive
We have confirmed that our products comply with the Low Voltage Directive (EN 61800-5-1).

EMC Directive
The Directive defines the requirements for immunity and emissions of electrical equipment used within the European Union. The EMC product standard (EN 61800-3) covers requirements stated for drives.

EAC mark



The EAC (EurAsian Conformity) mark is applied to the products before they are placed on the market of the Eurasian Customs Union member states.
It indicates the compliance of the products with the following technical regulations and requirements of the Eurasian Customs Union:
Technical Regulations of the Customs Union 004/2011 “On safety of low voltage quipment”
Technical Regulations of the Customs Union 020/2011 “On electromagnetic compatibility of technical products”

EMI / RFI POWER LINE FILTERS

LS inverters, S100 series

VMC vector motor control

RFI FILTERS

THE LS RANGE OF POWER LINE FILTERS FEB (Standard) and FF (Footprint) SERIES, HAVE BEEN SPECIFICALLY DESIGNED WITH HIGH FREQUENCY LSis INVERTERS. THE USE OF LS FILTERS, WITH THE INSTALLATION ADVICE OVERLEAF HELP TO ENSURE TROUBLE FREE USE ALONG SIDE SENSITIVE DEVICES AND COMPLIANCE TO CONDUCTED EMISSION AND IMMUNITY STANDARDS TO EN 50081.

CAUTION

IN CASE OF A LEAKAGE CURRENT PROTECTIVE DEVICES IS USED ON POWER SUPPLY, IT MAY BE FAULT AT POWER-ON OR OFF.
IN AVOID THIS CASE, THE SENSE CURRENT OF PROTECTIVE DEVICE SHOULD BE LARGER

RECOMMENDED INSTALLATION INSTRUCTIONS

To conform to the **EMC** directive, it is necessary that these instructions be followed as closely as possible. Follow the usual safety procedures when working with electrical equipment. All electrical connections to the filter, inverter and motor must be made by a qualified electrical technician.

1-) Check the filter rating label to ensure that the current, voltage rating and part number are correct.

2-) For best results the filter should be fitted as closely as possible to the incoming mains supply of the wiring enclousure, usually directly after the enclousures circuit breaker or supply switch.

3-) The back panel of the wiring cabinet of board should be prepared for the mounting dimensions of the filter. Care should be taken to remove any paint etc... from the mounting holes and face area of the panel to ensure the best possible earthing of the filter.

4-) Mount the filter securely.

5-) Connect the mains supply to the filter terminals marked **LINE**, connect any earth cables to the earth stud provided. Connect the filter terminals marked **LOAD** to the mains input of the inverter using short lengths of appropriate gauge cable.

6-) Connect the motor and fit the ferrite core (output chokes) as close to the inverter as possible. Armoured or screened cable should be used with the 3 phase conductors only threaded twice through the center of the ferrite core. The earth conductor should be securely earthed at both inverter and motor ends. The screen should be connected to the enclousure body via and earthed cable gland.

7-) Connect any control cables as instructed in the inverter instructions manual.

IT IS IMPORTANT THAT ALL LEAD LENGHTS ARE KEPT AS SHORT AS POSSIBLE AND THAT INCOMING MAINS AND OUTGOING MOTOR CABLES ARE KEPT WELL SEPARATED.

FEB/FEP SERIES (Standard)

Fig 1

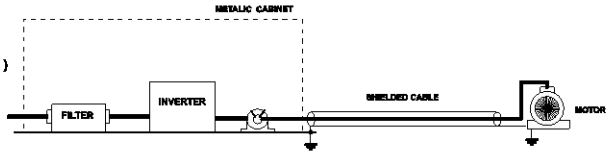

INTERNAL FILTERS

Fig 2

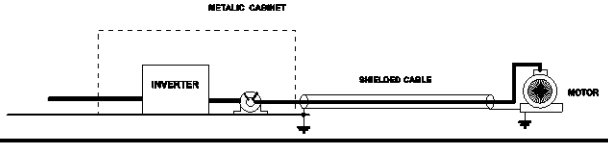

PR0064

Footprint Filters

EN 55011 CLASS B IEC/EN 61800-3 C2

Inverter	Power	Code	Current [A]	Voltage [Vac]	Leakage Current[mA]		Dimension [L,W,H]	Mounting [Y,X]	Weight [Kg]	Fig.	Output Choke
					Nom.	Max.					
LSLV0004S100-1	0.4kW	FFS100-M010-2	10	250	-	3.5	176x71.5x45	162x50	0.6	B	FS-1
LSLV0008S100-1	0.75kW	FFS100-M011-2	10	250	-	3.5	176x103.5x45	162x82	0.8	B	FS-1
LSLV0015S100-1	1.5kW	FFS100-M020-2	20	250	-	3.5	176x103.5x45	162x82	0.8	B	FS-2
LSLV0022S100-1	2.2kW	FFS100-M021-2	20	250	-	3.5	176x143.5x45	162x122	0.9	B	FS-2
LSLV0004S100-2	0.4kW	FFS100-T006-2	6	220-480	0.3	18	176x71.5x45	162x50	1.6	B	FS-2
LSLV0008S100-2	0.75kW										
LSLV0015S100-2	1.5kW	FFS100-T012-2	12	220-480	0.3	18	176x103.5x45	162x82	1.6	B	FS-2
LSLV0022S100-2	2.2kW										
LSLV0037S100-2	3.7kW	FFS100-T020-2	20	220-480	0.3	27	176x143.5x45	162x122	1.8	B	FS-2
LSLV0040S100-2	4.0kW										
LSLV0004S100-4	0.4kW	FFS100-T006-2	6	220-480	0.3	18	176x71.5x45	162x50	1.6	B	FS-2
LSLV0008S100-4	0.75kW										
LSLV0015S100-4	1.5kW	FFS100-T012-2	12	220-480	0.3	18	176x103.5x45	162x82	1.6	B	FS-2
LSLV0022S100-4	2.2kW										
LSLV0037S100-4	3.7kW	FFS100-T020-2	20	220-480	0.3	27	176x143.5x45	162x122	1.8	B	FS-2
LSLV0040S100-4	4.0kW										

Standard Filters

EN 55011 CLASS A IEC/EN 61800-3 C3

Inverter	Power	Code	Current [A]	Voltage [Vac]	Leakage Current[mA]		Dimension [L,W,H]	Mounting [Y,X]	Weight [Kg]	Fig.	Output Choke
					Nom.	Max.					
LSLV0055S100-2	5.5kW	FLD 3042	42A	220-480	0.5	27	335x60x150	35x320	2.8	C	FS-2
LSLV0075S100-2	7.5kW	FLD 3055	55A	220-480	0.5	27	335x60x150	35x320	3.1	C	FS-2
LSLV0110S100-2	11kW	FLD 3075	75A	220-480	0.5	27	335x60x150	35x320	4	C	FS-2
LSLV0150S100-2	15kW	FLD 3100	100A	220-480	0.5	27	330x80x220	55x314	5.5	C	FS-3

Internal Filters

EN 55011 CLASS A IEC/EN 61800-3 C3

Inverter	Power	Code	Current [A]	Voltage [Vac]	Leakage Current[mA]		Dimension [L,W,H]	Mounting [Y,X]	Weight [Kg]	Fig.	Output Choke
					Nom.	Max.					
LSLV0055S100-4	5.5kW										FS-2
LSLV0075S100-4	7.5kW										FS-2
LSLV0110S100-4	11kW										FS-2
LSLV0150S100-4	15kW										FS-3
LSLV0185S100-4	18.5kW										FS-3
LSLV0220S100-4	22kW										FS-3
LSLV0300S100-4	30kW										FS-3
LSLV0370S100-4	37kW										FS-3
LSLV0450S100-4	45kW										FS-3

Non-Filters

EN 55011 CLASS A IEC/EN 61800-3 C3

Inverter	Power	Code	Current [A]	Voltage [Vac]	Leakage Current[mA]		Dimension [L,W,H]	Mounting [Y,X]	Weight [Kg]	Fig.	Output Choke
					Nom.	Max.					
LSLV0550S100-4	55kW										FS-3
LSLV0750S100-4	75kW										FS-3

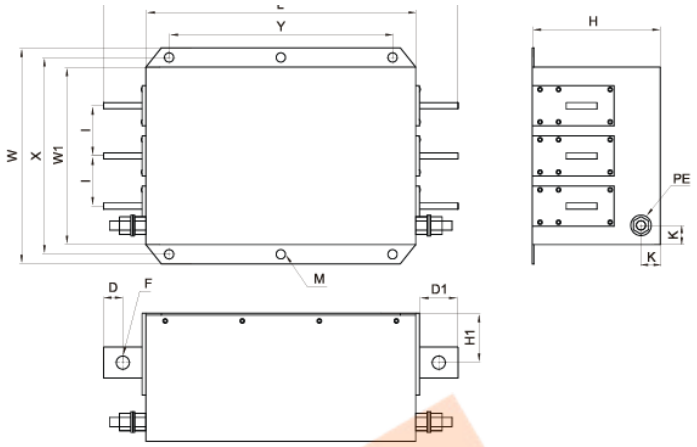

<FIG. A(FEPT Series)>

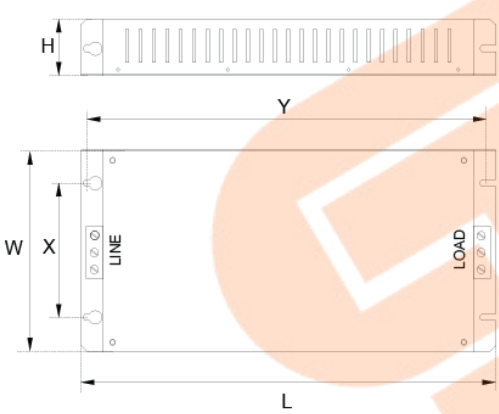

<FIG. B(FF Series)>

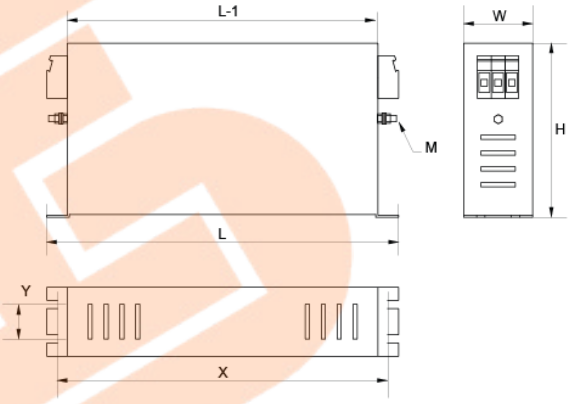

<FIG. C(FLD Series)>

VMC
vector motor control

Vector Motor Control Ibérica S.L.
C/ Mar del Caribe, 10
Pol. Ind. La Torre del Rector
08130 Santa Perpétua de Mogoda
(BARCELONA) ESPAÑA
Tel. (+34) 935 748 206
Fax (+34) 935 748 248
info@vmc.es
www.vmc.es

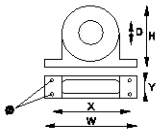

FS SERIES (output chokes)

CODE	D	W	H	X	Ø
FS-1	21	85	50	22	4
FS-2	28.5	105	62	80	5
FS-3	48	150	110	125 x 30	5

Manual Revision History

Revision History

No	Date	Edition	Changes
1	2013.12	First Release	-
2	2014.11	2nd Edition	S/W Version up(V2.0)
3	2015.06	3rd Edition	S/W Version up(V2.3)
4	2016.09	4th Edition	S/W Version up(V2.5)
5	2019.05	5th Edition	Three manuals are Unified
6	2020.05	6th Edition	S/W Version up(V2.8)
7	2020.12	7th Edition	S/W Version up(V2.9)
8	2023.04	8th Edition	S/W Version up(V3.0)

Index

[

[DOWN] key 63
[ESC] key 63
[HAND] key 63
[LEFT] key 63
[MODE] key 63
[MULTI] key 63
[OFF] key 63
[PROG / Ent] key 63
[RIGHT] key 63
[STOP/RESET] key 63
[UP] key 63

2

2 square reducion 100
24 terminal 43, 46
2nd Motor Function group ... Refer to M2 (2nd Motor Function group) group
2nd Motor Operation 221
2nd Operation mode 145
2nd command source 145
Shared command (Main Source) 145

3

3-phase 200V (0.4~4k W) 402
3-phase 200V (5.5~15 kW) 403
3-phase 400V (0.4~4 kW) 404
3-phase 400V (5.5~22 kW) 405, 407
3-Wire Operation 173

4

4-pole standard motor 401, 404, 405

7

7-segment display 58
letters 59
numbers 59

A

A terminal (Normally Open) 146
A1/C1/B1 terminal 44
AC power input terminal ..... Refer to *R/S/T terminal*, Refer to *R/S/T terminal*, Refer to *R/S/T terminal*
Acc/Dec pattern 100, 130
linear pattern 130
S-curve pattern 130
Acc/Dec reference 126
Delta Freq 125
Max Freq 125
Acc/Dec reference frequency 125
Ramp T Mode 125
Acc/Dec stop 132
Acc/Dec time 125
Acc/Dec time switch frequency 129
configuration via multi-function terminal 127
maximum frequency 125
operation frequency 126
accumulated electric energy initialize 232
Ad (Expanded function group) 317
Add User group
UserGrp SelKey 230
advanced features group 65
Advanced function group .. Refer to ADV (advanced) function group
analog frequency hold 114
Analog Hold 114
Analog Hold ..... Refer to *analog frequency hold*
analog input 41, 64
I2 current input 109
I2 voltage input 110
TI Pulse input 111
V1 voltage input 103
analog input selection switch(SW2) 39, 110
analog output 43
AO terminal 43
pulse output 240
voltage and current output 237
Analog Output 237
analog output selection switch(SW3) 39, 237

AO terminal 43, 123, 237
analog output selection switch(SW3) 39
AP(Application Function group) 346
ARM short current fault trip ..Refer to *Over Current2*
ASCII code 286
asymmetric ground power 48
asymmetric ground structure
EMC filter 48
asynchronous communications system 275
auto restart settings 218
auto torque boost 136, 137
auto tuning 136, 186
auto tuning 186
All(rotating) 188
All(static) 188
default parameter setting 187
Tr(static) 188
Auto Tuning 314
auxiliary frequency 163
auxiliary frequency reference configuration 163
auxiliary reference 163
auxiliary reference gain 164
configuration 163
final command frequency calculation 165
main reference 163

B

B terminal (Normally Closed) 146
bA(Basic function group) 312
basic configuration diagram 16
Basic group ..... Refer to BAS (Basic function group)
basic operation 57
bit 146
bit (Off) 147
bit (On) 147
bit setting 147
multi-function input setting 146
multi-function output setting 247
speed search setting 216
stall prevention 257
Bootlace Ferrule 44
brake control 234
BR Control 234
brake engage sequence 234
brake release sequence 234
brake resistor 34, 35, 36
brake unit 236
braking resistance
braking torque 434
brake resistors 16
broadcast 283
built-in communication ..... Refer to *RS-485*
BX 274, 387

C

cable 13, 23, 25, 26, 28, 29, 30, 31, 32, 38
selection 13, 23, 25, 26, 28, 29, 30, 31, 32, 38
shielded twisted pair 54
signal(control) cable specifications 14
Cable
Ground Specifications 13
Power I/O Cable Specifications 13
cable tie 45
carrier frequency 37, 219
charge indicator 21, 385, 391
charge lamp 21
cleaning 395
CM terminal 41, 46
CM(communication function group) 342
Cn (Control Function group) 323
CNF (configuration mode) 66
command 117
configuration 117
Command
Cmd Source 117
command source
keypad 117
Command source
fwd/rev command terminal 118
RS-485 120
run command/rotational direction configuration 119
commercial power source transition 222
common terminal ..... Refer to *EG terminal*
communication 275
command loss protective operation 279
communication address 288
communication line connection 276
communication parameters 277
communication speed 277
communication standards 275
memory map 281
PLC 275
protocol 282
saving parameters defined by communication

.....280
setting virtual multi-function input 280
Communication function group..... Refer to COM (communication function group)
compatible common area parameter.....291
config (CNF) mode 232
Considerations for the installation
Air Pressure..... 8
Altitude/Vibration 8
Ambient Humidity..... 8
Environmental Factors 8
Considerations for the installation
Ambient Temperature..... 8
contact
A contact 262
B contact.....262
Control group..... Refer to CON (Control Function group)
control terminal board wiring..... 38
cooling fan
fan Operation accumulated time 252
fan Operation accumulated time initialization.252
Cooling Fan 223
Fan Control.....223
cooling fan malfunction.....268
CPU Watch Dog fault trip 274
cursor keys 63
[DOWN] key 63
[LEFT] key 63
[RIGHT] key..... 63
[UP] key 63

D

DB resistor
brakie resistor circuit 265
DB Warn %ED 265
DB Warn %ED .....Refer to DB Warn %ED
DC braking after start..... 138
DC braking after stop..... 139
DC braking frequency..... 139
DC link voltage 161, 207
delta wiring..... 48, 406
derating 220
Digital Output.....243
digital source..... 122
disposal 395, 400
dr(Drive group) 306
draw operation..... 161
Drive group..... Refer to DRV (Drive group)
Dwell Operation 175
Acc/Dec dewel frequency..... 175
acceleration Dwell 175
deceleration Dwell 175

E

earth leakage breaker 393
EEP Rom Empty 225
EG terminal 43
electronic thermal overheating protection (ETH) 253
EMC filter.....48
asymmetric power 48
disable 48
enable 49
emergency stop fault trip..... Refer to *BX*
energy buttfering operation..... 207
energy saving operation 213
automatic energy saving operation..... 214
manual energy saving operation..... 213
error code 286
FE(frame error)..... 286
IA(illegal data address) 286
ID(illegal data value)..... 286
IF(illegal function)..... 286
WM(write mode error)..... 286
ESC key.....62
[ESC] key configuration 169
[ESC] key setup..... 120
cancel input 62
Jog key 80
local/remote switching..... 121
multi-function key..... 120
remote / local operation switching..... 121
ETH..... Refer to *electronic thermal overheating protection (ETH)*
E-Thermal..... 273
Exciting Current 192
external 24V power terminal... Refer to *24 terminal*
external dimensions
0.8~1.5kW(Single Phase), 1.5~2.2kW(3 Phase) 413
5.5~22kW(3 phase)..... 417
External dimensions.....411
External dimensions
0.4kW(Single Phase), 0.4~0.8kW(3 Phase) ..411
External Trip 273, 386

external trip signal 262

F

factory default 87, 88, 89
fan trip 268
Fan Trip 273, 387
fan warning 268
Fan Warning 274, 388
fatal 385
fault 273
  fatal 385
  fault/warning list 273
  latch 385
  level 385
  major fault 273
fault monitoring
  multiple fault trips 97
fault signal output terminal ..... Refer to *A1/C1/B1 terminal*
fault trip mode 66
FE(FRAME ERROR) 286
ferrite 45
fieldbus 102, 117
  communication option 145
Fieldbus ..... Refer to *fieldbus*
filter time constant 104
filter time constant number 146
flux braking 256
free run stop 141
frequency jump 144
frequency limit 142
  frequency jump 144
  frequency upper and lower limit value 143
  maximum/start frequency 142
frequency reference 102, 138
frequency setting 102
  I2 current input 109
  I2 voltage input 110
  keypad 102, 103
  RS-485 113
  TI Pulse input 111
  V1 voltage input 103
  variable resistor 87
frequency setting (Pulse train) terminal ..... Refer to *TI terminal*
frequency setting(voltage) terminal ..... Refer to *V1 terminal*
fuse 431
Fuse and Reactor Specifications 429

G

ground 28
  class 3 ground 28
  class 3 ground 28
  ground terminal 29, 30, 31
Ground
  Ground Cable Specifications 13
ground fault trip ..... Refer to *Ground Trip*
Ground Trip 273, 386
  ground fault trip 386

H

half duplex system 275
Heavy Duty 8
heavy load 401
hunting 196

I

I2 41, 109
  analog input selection switch(SW2) 42
  frequency setting(current/voltage) terminal 41
IA(illegal data address) 286
ID(illegal data value) 286
IF(illegal function) 286
In Phase Open 273, 386
In(Input Terminal Block Function group) 332
input and output specification
  applied motor 401
  rated input 401
  rated output 401
input open-phase fault trip .. Refer to *In Phase Open*
input phase open
  input open-phase protection 261
input power frequency 224
input power voltage 224
input terminal 41
  CM terminal 41
  I2 terminal 41
  P1–P7 terminal 41
  SA terminal 42

SB terminal 42
SC terminal 42
TI terminal 42
V1 terminal 41
VR terminal 41
Input terminal function group ..... Refer to IN (Input terminal function group)
inspection
annual inspection 396
bi-annual inspection) 398
installation 15
basic configuration diagram 16
Installation flowchart 15
wiring 21
Installation
Mounting the Inverter 17
installation considerations 8
IP 20 409

J

Jog Operation 167
[ESC] key configuration 80
FWD Jog 167
Jog frequency 167
keypad 169
jump frequency 144

K

keypad 57
[ESC] key 63
[HAND] key 63
[MODE] key 63
[MULTI] key 63
[OFF] key 63
[PROG / Ent] key 63
[STOP/RESET] key 63
configuration mode 66
cursor keys 63
display 57
monitor mode 66
navigating between groups 65
operation keys 57
parameter mode 66
S/W version 232
trip mode 66
Keypad
Keypad Language 249
keypad display 58
keypad key 62
[▲]/[▼]/[◀]/[▶] key 62
[ESC] key 62
[RUN] key 62
[STOP/RESET] key 62

L

latch 385
LCD keypad 25, 28
LCD brightness/contrast adjustment 232
wiring length 45
leakage breaker 428
level 385
lift-type load 130, 135, 136, 175
linear pattern 130
linear V/F pattern operation 132
linear V/F pattern Operation
base frequency 133
start frequency 133
local operation
[ESC] key 121
Local/Remote Mode Switching 120
remote peration 121
local Operation 121
locating the installation site 9
location 9
loop 149
loop time 153
Lost Command 274, 387, 388
command loss fault trip warning 274
command loss trip 274
low voltage 269
low voltage fault trip 269
low voltage trip 2 272
Low Voltage 274, 386
low voltage fault trip 274
LowLeakage PWM 220
LS INV 485 protocol 282

M

M2(2nd Motor Function group) 354
magnetic contactor 37
Magnetic contactor 428
maintenance 395

manual torque boost....135
Master....276
master inverter....148
master unit....147
megger test....396
micro surge filter....37
momentary power interruption....207, 216, 217
monitor....90
monitor registration protocol details....285
Operation State Monitor....249
Operation time monitor....252
monitoring
monitor mode....66
monitor mode display....59
motor output voltage adjustment....137
motor protection....253
motor rotational direction....56
motor thermal protection(ETH)
ETH trip....253
E-Thermal....253
mounting bolt....17
mounting bracket....19
multi function input terminal
In.65~71....334
Px terminal function setting....334
multi function input terminal
Px Define....334
multi keypad
Multi KPD....149
multi keypad(Multi-keypad)
slave parameter....149
multi-drop Link System....275
Multi-function (open collector) output terminal
Multi-function output item1(Q1 Define)....339
Multi-function relay 1 item(Relay 1)....338
multi-function input terminal....41
factory default....41
multi-function input terminal Off filter....146
multi-function input terminal On filter....146
P1–P7....Refer
multi-function input terminal control....146
multi-function key....58
Multi Key Sel....382
multi-function key options....382
multi-function output
multi-function output terminal delay time settings....248
multi-function output terminal
multi-function output on/off control....235
multi-function output terminal and relay settings....243
multi-function output terminal delay time settings....248
trip output by multi-function output terminal and relay....247
multi-function(open collector) output terminal.. Refer to *Q1 terminal*
multi-keypad....148
master parameter....149
multi-keypad)
setting....148
multi-step frequency....115
setting....115
Speed-L/Speed-M/Speed-H....116

N

N- terminal(- DC link terminal)....34, 36
no motor trip....272
No Motor Trip....274, 386
noise....48, 106
Normal Duty....8
normal load....401
Normal PWM....220
NPN mode(Sink)....47

O

oOut Phase Open....386
open-phase protection....261
Operation frequency....*Refer to frequency setting*
operation group....305
operation noise....219
carrier frequency....219
frequency jump....144
Operation time....252
operation accumulated time....252
Operation accumulated time....252
Operation accumulated time initialization....252
option trip....271, Refer to *Option Trip-x*
Option Trip-x....273
option trip....273
OU(Output Terminal Block Function group)....337
Out Phase Open....273
output block by multi-function terminal....270
output open-phase fault trip....Refer to *Out Phase*

Open
output terminal.....Refer to *R/S/T terminal*, Refer to *R/S/T terminal*, Refer to *R/S/T terminal*
Output terminal function group ..... Refer to OUT (Output terminal function group)
output/communication terminal 43
24 terminal 43
A1/C1/B1 terminal 44
AO terminal 43
EG terminal 43
Q1 terminal 43
S+/S-/SG terminal 44
TO terminal 43
over current trip ..... Refer to *Over Current1*
Over Current1 ..... 273, 385
Over Current2 ..... 273, 386
Over Heat 273, 386
over heat fault trip ..... Refer to *Over Heat*
Over Load 274, 385
overload fault trip 274
overload warning 274, 388
Over Voltage 273, 386
over voltage trip ..... Refer to *Over Voltage*
overload ..... Refer to *Over Load*
overload overload trip 254
overload warning 254
overload rate 220
overload trip ..... Refer to *Over Load*

P

P/Igain 217
P1+ terminals(+ DC link terminals) 34, 35, 36
P2P 147
communication function 147
master parameter 147
setting 147, 148
slave parameter 148
parameter 77
display changed parameter 229
hide parameters 227
initialization 226
parameter lock 228
parameter setting 77
parameter settings 78
password 227, 228
read/write/save 225
parameter mode 66
parameter view lock 227
part names 3
parts illustrated 3
password 227, 302
Password 228
Peripheral devices 428
phase-to-phase voltage 392
PID control 178
basic PID operation 179
configuration 178
Differential time(PID D-Time) 181
integral time(PID I-Time) 181
oscillation 182
Pgain 181
PID feedback 387
PID Operation Sleep mode 185
PID output 180
PID reference 180
PID Switching 186
Pre-PID Operation 184
PNP mode(Source) 46
PNP/NPN mode selection switch(SW1) 39
NPN mode(Sink) 47
PNP mode(Source) 46
post-installation checklist 53
power consumption 250, 251
power slot 233
power terminal 36
N- terminal 34, 36
P2+/B terminal 34, 35, 36
U/V/W terminal 34, 35, 36
power terminal board wiring 32
power terminals
R/S/T terminals 34, 35, 36
Power-on Run ..... Refer to *start at power-on*
Pr(Protection Function group) 349
pre-exciting time 193
Preinsulated Crimp Terminal 44
press regeneration prevention 236
Press regeneration prevention
P gain/I gain 237
protocol 282
LS INV 485 protocol 282
Pulse output terminal ..... Refer to *TO terminal*
PWM 219
frequency modulation 219

Q

Q1 terminal 43
quantizing ..... Refer to *Quantizing*
Quantizing 105
  noise 106

R

R/S/T terminal 37
R/S/T terminals 34, 35, 36, 391
rated 402
  braking resistance rated capacity 434
  rated input 402
Rated
  rated output 402
rated torque current 239
rating
  rated motor current 177
  rated motor voltage 186
  rated slip frequency 178
  rated slip speed 177
reactor 16, 431
regenerated energy 141, 207
remote operation 121
  [ESC] key 121
  local operation 121
  Local/Remote Mode Switching 120
Reset Restart ..... *refer to restarting after a trip*
resonance frequency 144
  carrier frequency 219
  frequency jump 144
restarting after a trip 124
RS-232 276
  communication 276
RS-485 275
  communication 276
  converter 276
  integrated communication 113
  signal terminal 44, 113
RS-485 signal input terminal ..... Refer to *S+/S-/SG terminal*
run prevention
  Fwd 122
  Rev 122

S

S/W version 232
  keypad 232
  product 232
S+/S-/SG terminal 44
S100 expansion common area parameter
  control area parameter(Read/Write) 299
  memory control area parameter(Read/Write) 301
  monitor area parameter (read only) 294
SA terminal 42
Safe Operation mode 174
safety information ii
safety input power terminal ..... Refer to *SC terminal*
safety inputA terminal ..... Refer to *SA terminal*
Safety inputB terminal ..... Refer to *SB terminal*
SB terminal 42
SC terminal 42
screw specification
  control circuit terminal screw 433
  input/output terminal screw 431
  screw size 431
  screw torque 431
S-curve pattern 130
  actual Acc/Dec time 131
sensorless vector control 190
  configuration 192
  Hold Time 193
  Igain 194
  IM Sensorless 192
  Pgain 194
  pre-exciting time 193
  sensorless vector control operation guide 196
sequence common terminal . Reftrer to *CM terminal*
serge killer 53
setting virtual multi-function input 280
single phase 200V (0.4~2.2 kW) 401
Slave 276
slave inverter 148
slave unit 147
Slip 177
slip compensation operation 177
speed command loss 263
speed search operation 214
  Flying Start-1 215
  Flying Start-2 215
  options 216
  P/Igain 217

speed unit selection (Hz or Rpm) 115
Square reduction
Square reduction load 133
V/F pattern Operation 133
stall
bit on/off 257
stall prevention 256
Stall 256
start at power-on 123
start mode 138
acceleration start 138
start after DC braking 138
Station 149
Station ID 288
stop mode 139
DC braking after stop 139
deceleration stop 139
free run stop 141
power braking 141
storage 399
Storing Temperature 8
surge killer 37
SW1 ..... Refer to PNP/NPN mode selection switch(SW1), Refer to PNP/NPN mode selection switch(SW1)
SW2 ..... Refer to analog input selection switch(SW2)
SW3 Refer to analog output selection switch(SW3)
switch 39
analog input selection switch(SW2) 39
analog output selection switch(SW3) 39
PNP/NPN mode selection switch(SW1) 39

T

target frequency
Cmd Frequency 306
technical specification 401
terminal 146
A terminal 146, 248
B terminal 146, 248
terminal for frequency reference setting . Refer to *VR terminal*
test run 55
TI terminal 42, 111
time scale
0.01sec 126
0.1sec 126
1sec 126
time scale setting 125
Timer 233
protection features group .. PRT (protection features) group
TO terminal 43, 240
torque 37
torque control 210
torque reference setting option 211
torque boost 135
auto torque boost 136, 137
manual torque boost 135
overexcitation 136
trip 385
fault/waring list 273
trip condition monitor 91
trip mode 66
trip status reset 270
Trip
troubleshooting 389
trip(Trip)
Erase trip history 232
troubleshooting 385
other faults 391
troubleshooting fault trips 389

U

U&M mode 231
U/V/W terminal 34, 36, 37
U/V/W terminals 35, 391
UF 359
under load
under load trip 267
under load warning 267
Under Load 274
underload fault trip 274
underload trip 385
underload warning 274, 388
underload fault trip ..... Refer to *Under Load*
update 232, 285
Up-Down Operation 170
US 356
user group 230
delete parameters 231
user group
parameter registration 230
User mode 65
user sequence 149
function block parameter 154

setting 149
UF group 150
US group 150
user function operation condition 154
void parameter 149, 153
user V/F pattern Operation 134
using the keypad 67
groups/codes 70
Jog Operation key 80
parameter settings 78
switching between groups in parameter display mode 72
using the using the keypad parameter setting 77

V

V/F control 132
linear V/F pattern operation 132
Square reductionV/F pattern Operation 133
user V/F pattern Operation 134
V1 terminal 41, 103
V2
analog input selection switch(SW2) 42
V2 input 110
I2 voltage input 110
variable resistor 87
variable torque load 133, 209
voltage drop 37
voltage/current output terminal Refer to *AO terminal*
VR terminal 41

W

warning 385
Warning
fault/warning list 273
wiring 21
circuit breaker 428
control terminal board wiring 38
copper cable 21
cover disassembly 22
ferrite 45
ground 28
power terminal board wiring 32
re-assembling the covers 52
signal wiring 44
torque 21
wiring length 37, 45
WM(write mode error) 286



021-88406044
09106611367
WWW.LSKALA.COM

www.ls-electric.com

LS ELECTRIC Co., Ltd.

■ **Headquarter**
LS-ro 127(Hogye-dong) Dongan-gu, Anyang-si, Gyeonggi-Do, 14119, Korea

■ **Seoul Office**
LS Yongsan Tower, 92, Hangang-daero, Yongsan-gu, Seoul, 04386, Korea
Tel: 82-2-2034-4033, 4888, 4703 Fax: 82-2-2034-4588
E-mail: automation@ls-electric.com

■ **Overseas Subsidiaries**
- **LS ELECTRIC Japan Co., Ltd. (Tokyo, Japan)**
  Tel: 81-3-6268-8241 E-Mail: japan@ls-electric.com
- **LS ELECTRIC (Dalian) Co., Ltd. (Dalian, China)**
  Tel: 86-411-8730-6495 E-Mail: china.dalian@lselectric.com.cn
- **LS ELECTRIC (Wuxi) Co., Ltd. (Wuxi, China)**
  Tel: 86-510-6851-6666 E-Mail: china.wuxi@lselectric.com.cn
- **LS ELECTRIC Middle East FZE (Dubai, U.A.E.)**
  Tel: 971-4-886-5360 E-Mail: middleeast@ls-electric.com
- **LS ELECTRIC Europe B.V. (Hoofddorp, Netherlands)**
  Tel: 31-20-654-1424 E-Mail: europartner@ls-electric.com
- **LS ELECTRIC America Inc. (Chicago, USA)**
  Tel: 1-800-891-2941 E-Mail: sales.us@lselectricamerica.com
- **LS ELECTRIC Türkiye Co., Ltd.**
  Tel: 90-212-806-1225 E-Mail: türkiye@ls-electric.com

■ **Overseas Branches**
- **LS ELECTRIC Tokyo Office (Japan)**
  Tel: 81-3-6268-8241 E-Mail: tokyo@ls-electric.com
- **LS ELECTRIC Beijing Office (China)**
  Tel: 86-10-5095-1631 E-Mail: china.auto@lselectric.com.cn
- **LS ELECTRIC Shanghai Office (China)**
  Tel: 86-21-5237-9977 E-Mail: china.auto@lselectric.com.cn
- **LS ELECTRIC Guangzhou Office (China)**
  Tel: 86-20-3818-2883 E-Mail: china.auto@lselectric.com.cn
- **LS ELECTRIC Chengdu Office (China)**
  Tel: 86-28-8670-3201 E-Mail: china.auto@lselectric.com.cn
- **LS ELECTRIC Qingdao Office (China)**
  Tel: 86-532-8501-2065 E-Mail: china.auto@lselectric.com.cn
- **LS ELECTRIC Nanjing Office (China)**
  Tel: 86-25-8467-0005 E-Mail: china.auto@lselectric.com.cn
- **LS ELECTRIC Bangkok Office (Thailand)**
  Tel: 66-90-950-9683 E-Mail: thailand@ls-electric.com
- **LS ELECTRIC Jakarta Office (Indonesia)**
  Tel: 62-21-2933-7614 E-Mail: indonesia@ls-electric.com
- **LS ELECTRIC Moscow Office (Russia)**
  Tel: 7-499-682-6130 E-Mail: info@lselectric-ru.com
- **LS ELECTRIC America Western Office (Irvine, USA)**
  Tel: 1-949-333-3140 E-Mail: america@ls-electric.com
- **LS ELECTRIC Italy office (Italy)**
  Tel: 39-030-8081-833 E-Mail: italia@ls-electric.com

10310001390

Disclaimer of Liability
LS ELECTRIC has reviewed the information in this publication to ensure consistency with the hardware and software described. However, LS ELECTRIC cannot guarantee full consistency, nor be responsible for any damages or compensation, since variance cannot be precluded entirely. Please check again the version of this publication before you use the product.
© LS ELECTRIC Co., Ltd 2020 All Right Reserved.

LSLV-S100 / 2023.04