

Catalogue

Reliable made affordable



Himel

www.electroshaili.com Electro Shaili الکتروشایلی



About Himel

Himel is a multinational manufacturer and provider of electrical products successfully combining global expertise with local knowledge.

Founded by a Spanish entrepreneur in 1958, the company pioneered in exporting quality electrical enclosures, establishing Himel brand globally. Today, our global footprint and technology enable us to provide the best combination of affordable and reliable offers for Low Voltage Power distribution, Industry Automation and Home Electric to our long-term customers and partners in over 50 countries where we are present.

Himel. Reliable made affordable

www.electroshaili.ir ۰۲۱-۶۶۳۴۱۴۷۱۴ ۰۹۱۲-۶۳۹۸۹۶۱ ۰۹۱۰-۷۲۴۹۰۷۴ ۰۲۱-۶۶۱۷۰۰۶۲-۵ ۰۲۱-۹۲۰۰۶۶۱۷ (ده خط)

www.electroshaili.com Electro Shaili الکتروشایلی

Molded Case Circuit Breaker Product Overview

Molded Case Circuit Breaker



HDM3 002

Current: 10~1250A
Breaking Capacity: S, L, F, M, N, T



HDM2 068

Current: 10~100A
Breaking Capacity: L



HDM6s 074

Current: 16-800A
Breaking Capacity: L, S, M, T



HDM3E 099

Current: 50~1600A
Breaking Capacity: M



HDM6E 145

Current: 50~800A
Breaking Capacity: M



HDM3L 161

Current: 40~630A
Breaking Capacity: S,F,N

HDM3 Molded Case Circuit Breaker

Product selection
Standard:IEC/EN 60947-2

Material code: M363S6333102FR
Material description: HDM3-63S/33102 63A Fixed at rear

Product	Framesize	Breaking Capacity	Rated Current	Poles	Tripping Type	Product accessories	Protection Type	Operation Type	Product Inner Acc	Installation Type	Temperature
HDM3	63: 63A	S	10:10A	3: 3 Poles	2: Mag	xx:No accessories	Default: Power Distribution	Default:Toggle	Default: MX/MN AC400V	Default: Fixed Front	Default:40 ℃
	100: 100A	L	...	A: 4 Poles A type	3: Mag-therm	08: Alarm	2: Motor Protection	P: MCH	A: MX/MN AC230V	FR: Fixed Rear	T50 ℃
	160: 160A	F	1250:1250A	(The N phase is		10: Shunt		Z:Turning Toggle	B: MX DC24V	PF: Plug-in Front	
	250: 250A	M		directly connected		20: Auxiliary			C: MX AC230V MN: AC230V	PR: Plug-in Rear	
	400: 400A	N		with a wire, and		30: Undervoltage			D: MX AC400V MN AC230V	D: Draw-out	
	630: 630A	T		without contacts.		40: Shunt+auxiliary			E: MX DC24V MN AC230V		
	800: 800A			It's always		50: Shunt+undervoltage			F: MX AC230V MN: AC400V		
	1250: 1250A			closed.)		60: Two groups of auxiliary			G: MX AC400V MN AC400V		
				B: 4 Poles B type		70: Undervoltage+auxiliary			H: MX DC24V MN AC400V		
				(The N phase is		18: Shunt+alarm			I: MX DC110V		
				equipped with		28: Auxiliary+alarm			J: MX DC220V		
				contacts, but		38: Undervoltage+alarm			K: MX DC110V MN AC230V		
				without magnetic		48: Shunt+auxiliary alarm			L: MX DC110V MN AC400V		
				protection		68: Auxiliary+auxiliary			M: MX DC220V MN AC230V		
				or thermal		alarm			N: MX DC220V MN AC400V		
				protection. It		78: Undervoltage+auxiliary					
				closes earlier and		alarm					
				opens later than							
				the other 3 poles.)							

Remark:
1. Shunt/auxiliary/alarm contacts are classified into terminals and standard configured leadsTwo types for Shunt/auxiliary/alarm contacts: terminals and configured leads (standard offer)
2. Standard configuration of connection mode: fixed front connection
3. Standard configuration of conventional products: interphase barriers and mounting screw (without wiring copper bar)
4. As customized models, DC110V and DC220V shall be described specially
5. HDM3-100M/F/T/N minimum rated current is 40A.

www.electroshaili.ir ۰۲۱-۶۶۳۴۱۴۷۱۴ ۰۹۱۲-۶۳۹۸۹۶۱ ۰۹۱۰-۷۲۴۹۰۷۴ ۰۲۱-۶۶۱۷۰۰۶۲-۵ ۰۲۱-۹۲۰۰۶۶۱۷ (ده خط)

www.electroshaili.com Electro Shaili الکتروشایلی

HDM3 Molded Case Circuit Breaker

Product selection
Standard:IEC/EN 60947-2

Selection of accessories
HDM3-100 H1

Name	Current frame	Breaking Capacity	Product Inner Acc	Voltage Type	Installation Position	Poles
HDM3	100	FN	AL1	A2	L	3P
	63:63A	S	AL1:Alarm (with wire)	MX shunt:	L:Left	3P:3P
	100:100A	L	AL2:Alarm (with terminal)	A2:AC230V	R:Right	4P:4P
	160:160A	F	MX1:Shunt release (with wire)	A3:AC400V		
	250:250A	M	MX2:Shunt release (with terminal)	D1:DC110V		
	400:400A	N	OF11K1B:Auxiliary contact 1K1B(with wire)	D2:DC24V		
	630:630A	T	OF:21K1B:Auxiliary contact 1K1B(with terminal)	D3:DC220V		
	800:800A		OF12K2B:Auxiliary contact 2K2B(with wire)	MN under-		
	1250:1250A		OF22K2B:Auxiliary contact 2K2B(with terminal)	voltage:		
			MN:Undervoltage release	A2:AC230V		
			C3:Expanding terminal 3P(3pcs)	A3:AC400V		
			C4:Expanding terminal 4P(4pcs)			
			IB3:Interphase clapboard 3P(4pcs)			
			IB4:Interphase clapboard 4P(6pcs)			
			OFAL1:Auxiliary contact&Alarm (with wire)			
			OFAL2:Auxiliary contact&Alarm (with terminal)			
			CD1:AC Electric operating mechanism			
			CD2:DC Electric operating mechanism			
			H1: Round direct handle			
			H2: Square direct handle			
			HL1:Round extended rotation handle			
			HL2:Square extended rotation handle			

Remark:
1. The extension terminal is all called accessory plate or wiring copper bus
2. AL/MX/OF is equipped with terminal or lead can mount in the left and right position , and MN only mount in the left the default wiring length is 500mm, and when choose terminal type mount in the right, please remark the product is 3P or 4P.AL/OF default mount in the left, MX default mount in the right.
3. 100AF and the accessories of type S breaker and F/N breaker are different and shall be distinguished
4. MX shunt voltage type: AC230V、AC400V、DC24V、DC110V、DC220V
5. MN under-voltage type: AC230V、AC400V
6. Shunt: installed on the right
Under-voltage: installed on the left
Auxiliary, alarm and auxiliary alarm: optional on left or right
7. CD1:HDM3-1250 CD2:HDM3-63~800
8. HDM3-800 internal accessories (alarm, auxiliary, shunt, undervoltage) does not provide single selling
9. HDM3-1250 only provide motor mechanism selling separately

HDM3 Molded Case Circuit Breaker

Product Features
Standard:IEC/EN 60947-2

Product Features



Standard
·IEC 60947-1
·IEC 60947-2

Pollution Degree
HDM3 products operate in the environment (industrial environment) with pollution class 3 defined in IEC/EN 60947-1 and IEC/EN 60947-2 standards.

Wet and heat resistance
Dry and cold
Dry and heat
Wet and heat

Environment temperature
· HDM3 series can work for a long time under normal environment and operating temperature between -5℃ and 50℃ .

· Refer to the temperature derating factor table or contact us if the operating ambient temperature exceeds 40℃ (motor protection exceeds 60℃).
· Storage temperature ranges between -20℃ and 70℃ .

Altitude
· Altitude at normal installation site does not exceed 2000m.
· If the altitude exceeds 2000m, the changes in the dielectric strength and the air temperature drop must be considered. Refer to the altitude derating factor table or contact us.

Humidity
The following conditions must be met during normal operation:
· The relative humidity of atmosphere does not exceed 50% if the ambient air temperature is +40℃ .The product can be used at a high relative humidity if the temperature is low.
· The monthly average relative humidity at the wettest month is 90%.
· The impact of the condensation generated on the product surface on the product property shall be considered.

Reliable contact indication with isolating function
HDM3 moulded case circuit breaker complies with the isolation defined in IEC standard 60947-2
· The isolated location corresponds to O (OFF)
· The operating handle can indicate "OFF" only when the contact is really open
· he rotation handle or electric operating mechanism will not change the reliability of the contact indication system.Through the test, the isolating function must guarantee:

· Mechanical reliability of contact indication system
· No leakage current
· There is a certain overvoltage resistance capacity between the input and output terminals.

Protection class
· IP protection class of circuit breaker body: IP20
· Circuit breaker installed in the switch cabinet:
circuit breaker with a toggle handle IP40
circuit breaker with an electric operating mechanism IP40

www.electroshaili.ir ۰۲۱-۶۶۳۴۱۴۷۱۴ ۰۹۱۲-۶۳۹۸۹۶۱ ۰۹۱۰-۷۲۴۹۰۷۴ ۰۲۱-۶۶۱۷۰۰۶۲-۵ ۰۲۱-۹۲۰۰۶۶۱۷ (ده خط)

www.electroshaili.com Electro Shaili الکتروشایلی

HDM3 Molded Case Circuit Breaker

Technical parameters
Standard:IEC/EN 60947-2

Technical parameters

Shell frame current		HDM3-63				HDM3-100					
Rated voltage Ue(V)		400/415				400/415					
Rated insulation voltage Ui(V)		690				800					
Rated impulse withstand voltage Uimp(kV)		6				8					
Rated current In(A)		10--63				10--100		40--100			
Number of poles Pole (3P,4P-A/B)		3/4				3/4		3/4		3	
		L	S	M	F	L	S	M	F	T	N
Rated ultimate short circuit breaking capacity Icu (kA)	50/60Hz AC 400/415V	18	25	30	50	18	25	26	35	30	50
Rated operating short circuit breaking capacity Ics (kA)	50/60Hz AC 400/415V	18	18	30	30	18	18	26	26	30	30
Mechanical life	Mechanical with maintenance	20000				20000					
	Mechanical without maintenance	10000				10000					
Electrical life	AC 400/415V	4000				4000					
Protection type	Power distribution protection	■				■					
	Motor protection	■				■					
Tripping ways	Thermal magnetic tripping	■				■					
	Single magnetic tripping	■				■					
Installation mode	Fixed front connection	■				■					
	Fixed rear connection	■				■					
	Plug-in front connection	■				■					
	Plug-in rear connection	■				■					
	Withdrawable	-				-					
Product accessories	Undervoltage release	■				■					
	Shunt release	■				■					
	Alarm contact	■				■					
	Auxiliary contacts (one open and one closed)	■				■					
	Auxiliary contacts (two open and two closed)	■				■					
	Extension terminal	■				■					
	AC/DC general electrically operated	■				■					
	Round direct manually operated	■				■					
	Square direct manually operated	■				■					
	Round extended manually operated	■				■					
	Square extended manually operated	■				■					
	Phase partition	■				■					
Independent accessory installation		■				■					
Isolating function		■				■					
Use class		Class A				Class A					
Certification		TUV CE				TUV CE		KEMA CE			
Dimensions–Fixedfrontconnection W*H*D	3P(mm)	75*130*68				75*130*68		92*150*93.5			
	4P(mm)	100*130*68				100*130*68		122*150*93.5			
Weight	Fixed 3/4P [kg]	0.78/0.98				0.78/0.98		1.28/1.63			

HDM3 Molded Case Circuit Breaker

Technical parameters
Standard:IEC/EN 60947-2

Technical parameters

HDM3-160						HDM3-250						HDM3-400					
400/415						400/415						400/415					
800						800						800					
8						8						8					
100--160						100--250						200--400					
3/4						3/4						3/4					
L	S	M	F	T	N	L	S	M	F	T	N	L	S	M	F	T	N
21	35	30	50	36	60	21	35	30	50	36	60	21	35	30	50	39	70
21	21	30	30	36	36	21	21	30	30	36	36	21	21	30	30	39	39
20000						20000						20000					
10000						10000						5000					
4000						4000						2000					
■						■						■					
■						■						■					
■						■						■					
■						■						■					
■						■						■					
■						■						■					
■						■						-					
■						■						■					
-						-						■					
■						■						■					
■						■						■					
■						■						■					
■						■						■					
■						■						■					
■						■						■					
■						■						■					
■						■						■					
■						■						■					
■						■						■					
■						■						■					
■						■						■					
■						■						■					
■						■						■					
Class A						Class A						Class A					
KEMA CE						KEMA CE						KEMA CE					
107*165*76		107*165*88				107*165*76		107*165*88				150*257*107.5					
142*165*76		142*165*88				142*165*76		142*165*88				198*257*107.5					
1.53/2.03		1.53/2.03				1.53/2.03		1.53/2.03				4.60/5.05					

www.electroshaili.ir ۰۲۱-۶۶۳۴۱۴۷۱۴ ۰۹۱۲-۶۳۹۸۹۶۱ ۰۹۱۰-۷۲۴۹۰۷۴ ۰۲۱-۶۶۱۷۰۰۶۲-۵ ۰۲۱-۹۲۰۰۶۶۱۷ (ده خط)

www.electroshaili.com Electro Shaili الکتروشایلی

HDM3 Molded Case Circuit Breaker

Technical parameters
Standard:IEC/EN 60947-2

Shell frame current		HDM3-630						HDM3-800				HDM3-1250
Rated voltage Ue(V)		400/415						400				400
Rated insulation voltage Ui(V)		800						800				800
Rated impulse withstand voltage Uimp(kV)		8						8				8
Rated current In(A)		400--630						630--800				800--1250
Number of poles Pole (3P,4P-A/B)		3/4						3/4				3
		L	S	M	F	T	N	L	S	M	F	N
Rated ultimate short circuit breaking capacity Icu(kA)	50/60Hz AC 400/415V	21	35	30	50	39	70	25	50	40	70	85
Rated operating short circuit breaking capacity Ics(kA)	50/60Hz AC 400/415V	21	21	30	30	39	39	25	25	40	40	45
Mechanical life	Mechanical with maintenance	10000						2500				2500
	Mechanical without maintenance	5000						1250				1250
Electrical life	AC 400/415V	2000						500				500
Protection type	Power distribution protection	■						■				■
	Motor protection	■						-				-
Tripping ways	Thermal magnetic tripping	■						■				■
	Single magnetic tripping	■						■				■
Installation mode	Fixed front connection	■						■				■
	Fixed rear connection	■						■				-
	Plug-in front connection	-						-				-
	Plug-in rear connection	■						■				-
	Withdrawable	■						■				-
Product accessories	Undervoltage release	■						■				■
	Shunt release	■						■				■
	Alarm contact	■						■				-
	Auxiliary contacts (one open and one closed)	■						■				■
	Auxiliary contacts (two open and two closed)	■						■				■
	Extension terminal	■						■				■
	AC/DC general electrically operated	■						■				■
	Round direct manually operated	■						■				-
	Square direct manually operated	■						■				-
	Round extended manually operated	■						■				-
	Square extended manually operated	■						■				-
	Phase partition	■						■				■
Independent accessory Installation		■						-				-
Isolating Function		■						■				■
Use class		Class A						Class A				Class A
Certification		KEMA CE						KEMA,CE				-
Dimensions–Fixed front connection 3P(mm)		150*257*107.5						210*280*100				210*406*190
W*H*D 4P (mm)		198*257*107.5						280*280*100				-
Weight	Fixed 3/4P [kg]	5.10/6.24						7.34/9.68				18.98

Remark:
For HDM3-63/100, the rated current under 40 A, the protection function works at least at 400A; for the others, 10/12In.
For 100A, F/N type, the rated current starts with 40A.
The 4 Poles product with N phase is classified into type A and type B.
Type A: The N phase is directly connected with a wire, but without magnetic protection or thermal protection. It's always closed.
Type B: The N phase is installed with contacts, but without magnetic protection or thermal protection. It closes earlier and opens later than the other 3 poles.

HDM3 Molded Case Circuit Breaker

Distribution Protection
Standard:IEC/EN 60947-2

Low-voltage distribution protection

Fixed thermomagnetic release
HDM3 63-1250A

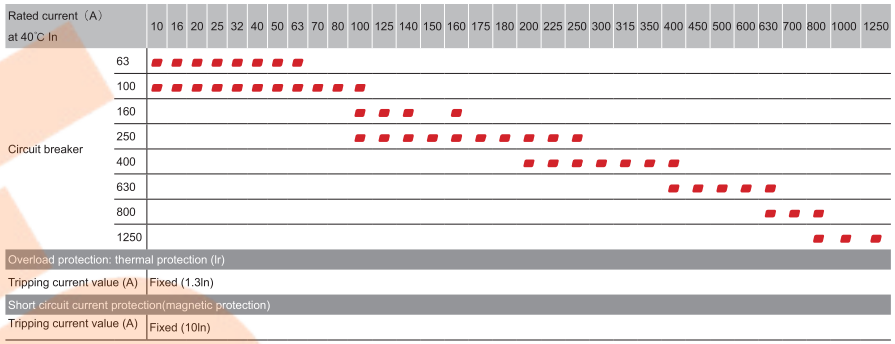

Protection
The circuit breaker equipped with TM thermomagnetic release is mainly for protection of the cable, which is on the power distribution system for transformer power supply.

Overload protection: thermal protection (Ir)
The overload protection function provides inverse time limit curve on the basis of bimetal. If the limit is exceeded, the deformation of the bimetal can lead in the tripping of the circuit breaker operating mechanism.
Short circuit protection: magnetic protection (Ii)
Magnetic protection achieves short circuit protection through a magnetic trip device. The circuit breaker will trip instantaneously
Short circuit protection Ii non-adjustable
De-rating table for application at higher ambient temperature

Frame	Ambient temperature				
	40	45	50	55	60
HDM3-63/100S/125S	1	0.96	0.89	0.83	0.75
HDM3-100F/N HDM3L-125	1	0.96	0.89	0.83	0.75
HDM3-160A/250A HDM3L-160A/250A	1	0.92	0.85	0.79	0.71
HDM3-400A/630A HDM3L-400	1	0.94	0.87	0.81	0.73
HDM3-800A HDM3L-630	1	0.95	0.88	0.82	0.74
HDM3-1250A	1	0.95	0.88	0.82	0.74

www.electroshaili.ir ۰۲۱-۶۶۳۴۱۴۷۱۴ ۰۹۱۲-۶۳۹۸۹۶۱ ۰۹۱۰-۷۲۴۹۰۷۴ ۰۲۱-۶۶۱۷۰۰۶۲-۵ ۰۲۱-۹۲۰۰۶۶۱۷ (ده خط)

www.electroshaili.com Electro Shaili الکتروشایلی

HDM3 Molded Case Circuit Breaker

Motor protection
Standard:IEC/EN 60947-2

HDM3 Motor protection

Motor feeder circuit functions
The motor feeder circuit comprises a set of devices for motor protection and control and feeder circuit self-protection.

Isolation
The energized conductors and upper-end distribution system are isolated, so that the maintenance personnel can maintain the motor feeder circuit without risk. The function is achieved by the motor protection circuit breaker and shall be provided with the reliable indicator of the contact indicating position

Power on/off
Manually, automatically or remotely control the motor (ON/OFF) and consider the overload at startup and the service life. The function is realiezed by the contactor. The contactor will be closed when the coil of the contactor is electrified. The upper power and the motor circuit will be connected through the circuit breaker.

Basic protection
• Short circuit protection:
Detect and break the large short circuit current as soon as possible to avoid damage to the equipment. The function is achieved by the circuit breaker with magnetic protection or with electronic trip unit.
• Overload protection:
Detect the overload current and turn off the motor before the insulation is damaged due to temperature rise of the motor and conductor. The function can be achieved by a thermomagnetic protection circuit breaker or an independent thermal relay.
• Phase imbalance or open-phase protection:
Phase imbalance or open phase will trigger temperature rise and braking torque, which may lead to premature aging of the motor. These effects are particularly prominent during startup, and thus the protection shall be very fast.

The motor feeder circuit protection parameters depend on:
• Application (driven equipment type, operation safety and operation frequency, etc.)
• Load or application continuity grade
• Applicable life and property protection standards

Required electrical functions:
• Power on/off, generally at a high withstand current level
• Applicable for the overload and short circuit protection of motor
• Additionally special protection

The motor feeder circuit must comply with the requirements
• Coordination between feeder circuit components
• Tripping class of thermal relay
• Use class of contactor
• Insulation coordination

Overload: I < 10*In
Causes:
• Electrical fault caused by power distribution system abnormalities (such as open phase, overvoltage or undervoltage)
• Mechanical problems caused by operation mistake (such as excessive torque) or motor damage (such as bearing vibration) will result in long startup time.

Impedance short circuit: 10*In < I < 50*In
Such short circuit is generally caused by motor winding insulation deterioration or power cable damage.

Short circuit: I > 50*In
Such faults are relatively few and generally caused by connection error during maintenance.

HDM3 Molded Case Circuit Breaker

Motor protection
Standard:IEC/EN 60947-2

Motor feeder solutions

The standard IEC 60947 defines three types of component combinations to protect the motor feeder circuit.
•Three components
Magnetic protection circuit breaker + contactor + thermal relay

•Two components
Circuit breaker with overload and short circuit protection + contactor

• One component
Circuit breaker with overload and short circuit protection + contactor integrated in a solution

Equipment coordination

The components in the motor feeder circuit shall cooperate with each other. IEC60947-4-1 standard defines three types of coordination according to the equipment operating conditions and the short circuit detection standard.

Type 1 coordination
No life or property limited
Contactor or thermal relay may be damaged
Repair and replacement may be required before continuing.

Type 2 coordination
No life or property risks
Damage or adjustment is not allowed. The risks of adhesive contacts can be accepted, but shall be easily separated and isolated after accidents The motor feeder may continue to use without repair or replacement of components
Quick check is enough before back into use

3 Perfect coordination
The equipment constituting the motor feeder circuit shall not have the risk of damage or contacts welding. The motor feeder may continue to use
without repair or replacement of components
In this type of coordination, an integrated equipment provides the solution.

Low-voltage Distribution

www.electroshaili.ir ۰۲۱-۶۶۳۴۱۴۷۱۴ ۰۹۱۲-۶۳۹۸۹۶۱ ۰۹۱۰-۷۲۴۹۰۷۴ ۰۲۱-۶۶۱۷۰۰۶۲-۵ ۰۲۱-۹۲۰۰۶۶۱۷ (ده خط)

www.electroshaili.com Electro Shaili الکتروشایلی

HDM3 Molded Case Circuit Breaker

Motor protection
Standard:IEC/EN 60947-2

Contactor use type

For a given motor feeder program, the use class determines the contactor resistance capacity on operating frequency and life. Selection based on the operation conditions of the application may be because of excessive protection of contactor and circuit breaker. IEC60947 standard defines the following use classes of the contactor

Contactor use class	Load type	Control function	Typical application
AC-1	Non-inductive	Electrify	Heating and power distribution
AC-2	Slip ring motor	Start Turn off the motor during operation Countercurrent braking Inching	Drawbench
AC-3	Squirrel-cage motor	Start Turn off the motor during operation	
AC-4		Start Turn off the motor duringoperation Regenerative braking Anti-phase braking Inching	Printing press, drawbench

- Common coordination table of circuit breaker and contactor with the use class of AC-3

- This class covers the squirrel-cage asynchronous motor, which the most common situation (accounting for 85%)The contactor can connect the starting current and cut off the rated current at 1/6 nominal voltage.The current shall be cut off without any obstacles and difficulties.HDM3 circuit breaker – contactor coordination table applies to the contactors with AC-3 use class, which can guarantee type 2 coordination.

- Use class AC-4 may require enlarging the specifications.

- The use class covers the squirrel-cage asynchronous motors which can operate under regenerative braking or inching (frequent start).The contactor can start and cut off the current under the system voltage. Due to these difficulties, the specifications of the contactors and the protection circuit breakers corresponding to class AC-3 shall be enlarged.

HDM3 Molded Case Circuit Breaker

Motor protection
Standard:IEC/EN 60947-2

Motor feeder circuit characteristics and solutions

Trip level of thermal protection equipment

The motor feeder circuit includes the thermal protection contained in the circuit breaker.The protected trip level shall be in line with the motor start level.The starting time of the motor ranges from several seconds (no-load starting) to tens of seconds (high-inertia load) according to the specific applications. IEC60947-4-1 standard defines the following trip levels as the settings of thermal protection current Ir.

Thermal relay trip level as settings of Ir				
Level	1.05Ir	1.2Ir	1.5Ir	7.2Ir
5	t > 2h	t < 2h	t < 2min	2s < t < 5s
10	t > 2h	t < 2h	t < 4min	4s < t < 10s
20	t > 2h	t < 2h	t < 8min	6s < t < 20s
30	t > 2h	t < 2h	t < 12min	9s < t < 30s

Current of squirrel-cage motor in full load conditions

Standard value with the unit of HP (horsepower)

Rated operating power	Rated operational current In(A)						
hp	110-120V	200V	208V	220-240V	380-415V	440-480V	550-600V
1/2	4.4	2.5	2.4	2.2	1.3	1.1	0.9
3/4	6.4	3.7	3.5	3.2	1.8	1.6	1.3
1	8.4	4.8	4.6	4.2	2.3	2.1	1.7
1 1/2	12	6.9	6.6	6	3.3	3	2.4
2	13.6	7.8	7.5	6.8	4.3	3.4	2.7
3	19.2	11	10.6	9.6	6.1	4.8	3.9
5	30.4	17.5	16.7	15.2	9.7	7.6	6.1
7 1/2	44	25.3	24.2	22	14	11	9
10	56	32.2	30.8	28	18	14	11
15	84	48.3	46.2	42	27	21	17
20	108	62.1	59.4	54	34	27	22
25	136	78.2	74.8	68	44	34	27
30	160	92	88	80	51	40	32
40	208	120	114	104	66	52	41
50	260	150	143	130	83	65	52
60	-	177	169	154	103	77	62
75	-	221	211	192	128	96	77
100	-	285	273	248	165	124	99
125	-	359	343	312	208	156	125
150	-	414	396	360	240	180	144
200	-	552	528	480	320	240	192
250	-	-	-	604	403	302	242
300	-	-	-	722	482	361	289

Note: 1 hp=0.7457 W

www.electroshaili.ir ۰۲۱-۶۶۳۴۱۴۷۱۴ ۰۹۱۲-۶۳۹۸۹۶۱ ۰۹۱۰-۷۲۴۹۰۷۴ ۰۲۱-۶۶۱۷۰۰۶۲-۵ ۰۲۱-۹۲۰۰۶۶۱۷ (ده خط)

www.electroshaili.com Electro Shaili الکتروشایلی

HDM3 Molded Case Circuit Breaker

Motor protection
Standard:IEC/EN 60947-2

Motor feeder circuit characteristics and solutions

Startup parameters of asynchronous motor
The main parameters (meeting 90% applications) of the direct startup of the three-phase asynchronous motors are shown as follows
Ir: Rated current

Startup parameters of asynchronous motor
Current of the motor under rated full load conditions (such as about 100Arms at voltage and 55kW power) 400V
Id Starting current
Current at motor startup. Depending on the specific applications, the starting time td is 5-30s and the average starting current is 7.2In (such as RMS current of 720A at 10s). These values determine the trip level and all other required "long start" protective
equipment.
I"d Peak starting current
Transient current between the first two half-wave periods after the system is powered:10-15ms
Average of 14In (such as peak 1840A)

By selecting appropriate thermal relay trip level, the protection settings must be able to effectively protect the motor and allow passing the peak starting current.

HDM3 Molded Case Circuit Breaker

Motor protection
Standard:IEC/EN 60947-2

HDM3 motor feeder circuit solutions

HDM3 motor protection series
HDM3 trip unit can be used to constitute the two equipments motor feeder circuit solutions.

Three-element solution
A HDM3 circuit breaker with magnetic protection (32XX)
A HDC6 contactor
A HDR6 thermal relay
Two-element solution
A HDM3 circuit breaker with magnetic protection (33XX)
A HDC6 contactor

Three-element solution section table

U=220/240V

Motor P(kw)	I(A) 220V	I(A) 240V	In maximum (A)	Circuit breaker type	Rated current (A)	Irm (A)	Contactor type	Thermal relay type	Irth (A)
1.1	5	4.5	6	HDM3-32XX2	10	82	HDC6-0911	HDR6-18 5-7A	4/6
1.5	6.5	6	8	HDM3-32XX2	16	113	HDC6-0911	HDR6-18 6.3~9A	5.5/8
2.2	9	8	10	HDM3-32XX2	16	138	HDC6-1211	HDR6-18 9~12A	7/10
3	12	11	12.5	HDM3-32XX2	16	163	HDC6-1811	HDR6-18 11~15A	9/13
4	15	14	18	HDM3-32XX2	25	250	HDC6-1811	HDR6-18 14~18A	12/18
5.5	21	19	25	HDM3-32XX2	25	325	HDC6-2511	HDR6-32 23~32A	17/25
6.3	24	22	25	HDM3-32XX2	25	325	HDC6-2511	HDR6-32 23~32A	17/25
7.3	28	25	32	HDM3-32XX2	50	450	HDC6-3211	HDR6-32 23~32A	23/32
10	36	33	40	HDM3-32XX2	50	550	HDC6-4011	HDR6-95 37~50A	30/40
11	39	36	40	HDM3-32XX2	50	550	HDC6-4011	HDR6-95 37~50A	30/40
15	52	48	63	HDM3-32XX2	100	700	HDC6-6511	HDR6-95 55~70A	48/65
18.5	63	59	63	HDM3-32XX2	100	900	HDC6-6511	HDR6-95 55~70A	48/65
22	75	70	80	HDM3-32XX2	100	1100	HDC6-8011	HDR6-95 80~95A	63/80
30	100	95	100	HDM3-32XX2	160	1300	HDC6-115	HDR6-185 90~115A	60/100
37	125	115	150	HDM3-32XX2	160	1950	HDC6-150	HDR6-185 130~160A	90/150
45	150	140	150	HDM3-32XX2	160	1950	HDC6-150	HDR6-185 130~160A	90/150
55	180	170	185 220	HDM3-32XX2	200 320	2420 2880	HDC6-225	HDR6-630 180~250A	132/220
75	250	235	265	HDM3-32XX2	320	3500	HDC6-265	HDR6-630 230~320A	200/330
90	300	270	320	HDM3-32XX2	320	4160	HDC6-330	HDR6-630 290~400A	200/330

www.electroshaili.ir ۰۲۱-۶۶۳۴۱۴۷۱۴ ۰۹۱۲-۶۳۹۸۹۶۱ ۰۹۱۰-۷۲۴۹۰۷۴ ۰۲۱-۶۶۱۷۰۰۶۲-۵ ۰۲۱-۹۲۰۰۶۶۱۷ (ده خط)

www.electroshaili.com Electro Shaili الکتروشایلی

HDM3 Molded Case Circuit Breaker

Motor protection
Standard:IEC/EN 60947-2

HDM3 motor feeder circuit solutions

Three-element solution section table

U=380/415V

Motor P(kw)	I(A) 380V	I(A) 415V	In maximum (A)	Circuit breaker type	Rated current (A)	Irm (A)	Contactor type	Thermal relay type	Irth (A)
2.2	5.3	4.8	6	HDM3-32XX2	10	82	HDC6-0911	HDR6-18 5-7A	4/6
3	7	6.5	8	HDM3-32XX2	16	113	HDC6-0911	HDR6-18 6.3~9A	5.5/8
4	9	8.2	10	HDM3-32XX2	16	138	HDC6-1211	HDR6-18 9~12A	7/10
5.5	12	11	12.5	HDM3-32XX2	16	163	HDC6-1811	HDR6-18 11~15A	9/13
7.5	16	14	18	HDM3-32XX2	25	250	HDC6-1811	HDR6-18 14~18A	12/18
10	21	19	25	HDM3-32XX2	25	325	HDC6-2511	HDR6-32 23~32A	17/25
11	23	21	25	HDM3-32XX2	25	325	HDC6-2511	HDR6-32 23~32A	17/25
15	30	28	32	HDM3-32XX2	50	450	HDC6-3211	HDR6-32 23~32A	23/32
18.5	37	34	40	HDM3-32XX2	50	550	HDC6-4011	HDR6-95 37~50A	30/40
22	43	40	50	HDM3-32XX2	50	650	HDC6-4011	HDR6-95 37~50A	37/50
30	59	55	63	HDM3-32XX2	100	900	HDC6-6511	HDR6-95 55~70A	48/65
37	72	66	80	HDM3-32XX2	100	1100	HDC6-6511	HDR6-95 80~95A	63/80
45	85	80	100	HDM3-32XX2	100	1300	HDC6-8011	HDR6-185 90~115A	60/100
55	105	100	115	HDM3-32XX2	160	1500	HDC6-115	HDR6-185 90~115A	90/150
75	140	135	150	HDM3-32XX2	160	1950	HDC6-150	HDR6-185 130~160A	90/150
90	170	160	185	HDM3-32XX2	200	2420	HDC6-150	HDR6-630 180~250A	132/220
110	210	200	220	HDM3-32XX2	250 320	2860 2880	HDC6-225	HDR6-630 180~250A	132/220
132	250	230	265	HDM3-32XX2	320	3500	HDC6-265	HDR6-630 230~320A	200/330
160	300	270	320	HDM3-32XX2	320	4160	HDC6-330	HDR6-630 290~400A	200/330

HDM3 Molded Case Circuit Breaker

Motor protection
Standard:IEC/EN 60947-2

HDM3 motor feeder circuit solutions

Two-element solution section table

U=220/240V

Motor P(kw)	I(A) 220V	I(A) 240V	In maximum (A)	Circuit breaker type	Rated current (A)	Irm(A)	Contactor type	Irth (A)
1.1	5	4.5	6	HDM3-32XX2	10	82	HDC6-0911	4/6
1.5	6.5	6	8	HDM3-32XX2	16	113	HDC6-0911	5.5/8
2.2	9	8	10	HDM3-32XX2	16	138	HDC6-1211	7/10
3	12	11	12.5	HDM3-32XX2	16	163	HDC6-1811	9/13
4	15	14	18	HDM3-32XX2	25	250	HDC6-1811	12/18
5.5	21	19	25	HDM3-32XX2	25	325	HDC6-2511	17/25
6.3	24	22	25	HDM3-32XX2	25	325	HDC6-2511	17/25
7.3	28	25	32	HDM3-32XX2	50	450	HDC6-3211	23/32
10	36	33	40	HDM3-32XX2	50	550	HDC6-4011	30/40
11	39	36	40	HDM3-32XX2	50	550	HDC6-4011	30/40
15	52	48	63	HDM3-32XX2	100	700	HDC6-6511	48/65
18.5	63	59	63	HDM3-32XX2	100	900	HDC6-6511	48/65
22	75	70	80	HDM3-32XX2	100	1100	HDC6-8011	63/80
30	100	95	100	HDM3-32XX2	160	1300	HDC6-115	60/100
37	125	115	150	HDM3-32XX2	160	1950	HDC6-150	90/150
45	150	140	150	HDM3-32XX2	160	1950	HDC6-150	90/150
55	180	170	185 220	HDM3-32XX2	200 320	2420 2880	HDC6-225	132/220
75	250	235	265	HDM3-32XX2	320	3500	HDC6-265	200/330
90	300	270	320	HDM3-32XX2	320	4160	HDC6-330	200/330

www.electroshaili.ir ۰۲۱-۶۶۳۴۱۴۷۱۴ ۰۹۱۲-۶۳۹۸۹۶۱ ۰۹۱۰-۷۲۴۹۰۷۴ ۰۲۱-۶۶۱۷۰۰۶۲-۵ ۰۲۱-۹۲۰۰۶۶۱۷ (ده خط)

www.electroshaili.com Electro Shaili الکتروشایلی

HDM3 Molded Case Circuit Breaker

Motor protection
Standard:IEC/EN 60947-2

HDM3 motor feeder circuit solutions

Two-element solution section table

U=380/415V

Motor P(kw)	I(A) 380V	I(A) 415V	In maximum (A)	Circuit breaker type	Rated current (A)	Irm(A)	Contactor type	Irth (A)
2.2	5.3	4.8	6	HDM3-32XX2	10	82	HDC6-0911	4/6
3	7	6.5	8	HDM3-32XX2	16	113	HDC6-0911	5.5/8
4	9	8.2	10	HDM3-32XX2	16	138	HDC6-1211	7/10
5.5	12	11	12.5	HDM3-32XX2	16	163	HDC6-1811	9/13
7.5	16	14	18	HDM3-32XX2	25	250	HDC6-1811	12/18
10	21	19	25	HDM3-32XX2	25	325	HDC6-2511	17/25
11	23	21	25	HDM3-32XX2	25	325	HDC6-2511	17/25
15	30	28	32	HDM3-32XX2	50	450	HDC6-3211	23/32
18.5	37	34	40	HDM3-32XX2	50	550	HDC6-4011	30/40
22	43	40	50	HDM3-32XX2	50	650	HDC6-5011	37/50
30	59	55	63	HDM3-32XX2	100	900	HDC6-6511	48/65
37	72	66	80	HDM3-32XX2	100	1100	HDC6-8011	63/80
45	85	80	100	HDM3-32XX2	100	1300	HDC6-115	60/100
55	105	100	115	HDM3-32XX2	160	1500	HDC6-115	90/150
75	140	135	150	HDM3-32XX2	160	1950	HDC6-150	90/150
90	170	160	185	HDM3-32XX2	200	2420	HDC6-185	132/220
110	210	200	220	HDM3-32XX2	250 320	2860 2880	HDC6-225	132/220
132	250	230	265	HDM3-32XX2	320	3500	HDC6-265	200/330
160	300	270	320	HDM3-32XX2	320	4160	HDC6-330	200/330

HDM3 Molded Case Circuit Breaker

Operating conditions
Standard:IEC/EN 60947-2

Operating conditions

Altitude derating

The circuit breaker features will not be affected if the altitude is below 2000m. The air insulation ability and cooling capacity shall be considered if the altitude is above 2000m.

Impact of altitude on the release performance

Altitude	2000m	3000m	4000m	5000m
Rated heat value at 40℃ (A)	In	0.96In	0.93In	0.9In
Average insulation voltage (V)	800	700	600	500
Dielectric strength (V)	3000	2500	2100	1800

Safety Distance

Safety Distance (Applicable to whole HDM3 series)

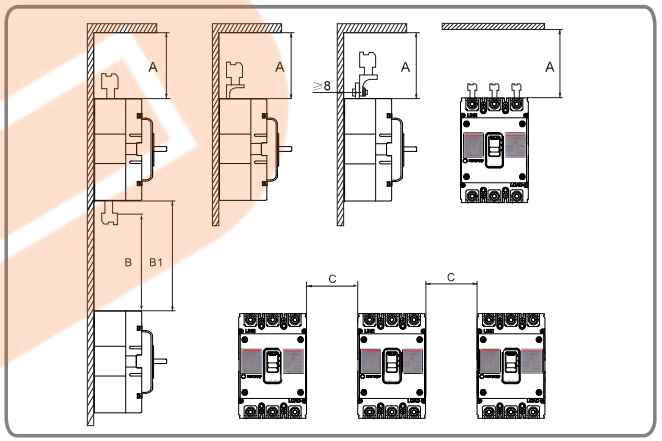

Safety Distance

Circuit breaker model	A (mm)	B (mm)	B1 (mm)	C (mm)
63A 100A 160A 250A	60	60	Bare cable length +B	30
400A 630A 800A 1250A	110	110		70

www.electroshaili.ir ۰۲۱-۶۶۳۴۱۴۷۱۴ ۰۹۱۲-۶۳۹۸۹۶۱ ۰۹۱۰-۷۲۴۹۰۷۴ ۰۲۱-۶۶۱۷۰۰۶۲-۵ ۰۲۱-۹۲۰۰۶۶۱۷ (ده خط)

www.electroshaili.com Electro Shaili الکتروشایلی

HDM3 Molded Case Circuit Breaker

Operating conditions
Standard:IEC/EN 60947-2

Operating conditions

The characteristics will be affect from high temperature

Impact of high temperature on the release performance(high-temperature degrading characteristics)

The overload protection value will be changed slightly when the temperature exceeds 40 ℃ . In the tripping curve chart, Ir , the setting value of the circuit breaker must be corrected according to the following factors

Circuit breaker mode	Environment temperature °C				
	40	45	50	55	60
HDM3-63L/S/M/F HDM3-100L/S	1	0.96	0.89	0.83	0.75
HDM3-100F/N/M/T	1	0.96	0.89	0.83	0.75
HDM3-160A/250A	1	0.92	0.85	0.79	0.71
HDM3-400A/630A	1	0.94	0.87	0.81	0.73
HDM3-800A	1	0.95	0.88	0.82	0.74
HDM3-1250A	1	0.95	0.88	0.82	0.74

Total power consumption of three poles(W)

Circuit breaker mode	Rated current	Front connection (standard configuration)	Rear connection	Plug-in connection	Withdrawable connection
HDM3-63/100L/S	63/100/125	24/26/28	27/29/31	28/29/32	-
HDM3-100M/F/T/N	100	40	50	50	-
HDM3-160A/250A	160/250	60/63	87/90	87/90	-
HDM3-400A/630A	400/630	115/180	120/190	125/200	128/205
HDM3-800A	800	200	230	290	300
HDM3-1250A	1250	250	-	-	-

HDM3 Molded Case Circuit Breaker

installation mode
Standard:IEC/EN 60947-2

HDM3 installation mode

HDM3 circuit breakers have three installation modes, i.e. fixed, plug-in and withdrawable.

F — Fixed

>Same upper and lower terminals
> It can be directly connected to the busbar or connected to the cables with the extensive terminals
> Fixed rear terminal: facilitate the installation and connection of the product after the panel
>The circuit breaker has 7
HDM3-63/100L/S
HDM3-100M/F/T/N
HDM3-160L/S, HDM3-250S/L
HDM3-160M/F/T/N,HDM3 M/F/T/N
HDM3-400/630
HDM3-800

P — Plug-in

>The plug-in structure is achieved by adding "plug-in suite" on the fixed circuit breaker
> Pull out or rapidly change the circuit breaker without contacting the loading and outing lines and the installation base
>The plug-in base can be pre-installed to facilitate increase of circuit breakers later
>It can isolate the power cable when it is installed with baseplate
>The circuit breaker can be pulled out when loosening the upper and lower set screws.

W — Withdrawable

>The withdrawable structure is to install two side plates respectively on the base and the circuit breaker. Similar to the plug-in configuration, the withdrawable circuit breaker has all advantages of the plug-in circuit breaker and is very easy to operate. The withdrawable type is similar to the plug-in type, with all the advantages of it, and easily operating.
>The withdrawable circuit breaker has three positions:
-Connected: the power supply circuit is connected
-Testing: the power supply circuit is connected and the circuit breaker can be operated to check the auxiliary circuit
-Disconneted: the circuit breaker can be removed from the base

	FF	FR	PF	PR	WD
	Fixed front	Fixed rear	Plug-in front	Plug-in rear	Withdrawable
HDM3-63	■	■	■	■	
HDM3-100	■	■	■	■	
HDM3-160	■	■	■	■	
HDM3-250	■	■	■	■	
HDM3-400	■	■		■	■
HDM3-630	■	■		■	■
HDM3-800	■	■		■	■
HDM3-1250	■				

www.electroshaili.ir ۰۲۱-۶۶۳۴۱۴۷۱۴ ۰۹۱۲-۶۳۹۸۹۶۱ ۰۹۱۰-۷۲۴۹۰۷۴ ۰۲۱-۶۶۱۷۰۰۶۲-۵ ۰۲۱-۹۲۰۰۶۶۱۷ (ده خط)

www.electroshaili.com Electro Shaili الکتروشایلی

HDM3 Molded Case Circuit Breaker

Accessories
Standard:IEC/EN 60947-2

HDM3 accessories

HDM3 series accessories list
Electrical accessories: shunt release, undervoltage release, auxiliary contact, alarm contact, auxiliary alarm integrated release and leakage alarm module
Mechanical accessories: interphase barriers, extension terminal, manual operating mechanism and electric operating mechanism
Installation accessories: Fixed rear, plug-in connection and withdrawable connection accessories.

Overview of Acc

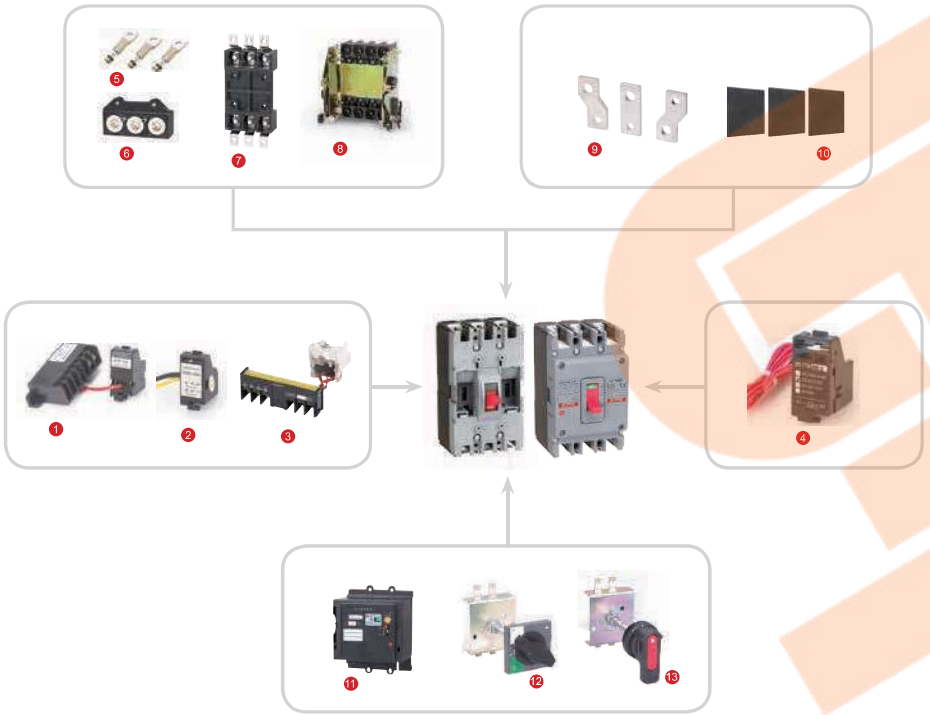

1	Undervoltage release	6	Plug-in rear connection	11	Electric operating mechanism
2	Auxiliary contact	7	Plug-in front connection	12	Square handle operating mechanism
3	Alarm contact	8	Withdrawable connection	13	Round handle operating mechanism
4	Shunt release	9	Extension terminal		
5	Fixed rear connection	10	interphase barriers		

HDM3 Molded Case Circuit Breaker

Mechanical accessories
Standard:IEC/EN 60947-2

HDM3 Mechanical accessories

Interphase barriers
The interphase barriers can enhance the insulating performances between phase and phases .
They can be installed from the product front even though the products had mounted.
Interphase barriers will be offered by standard, 3P product(4pcs), 4P product(6pcs)



Extension terminals
The extension terminal is connected to the standard terminal
of the circuit breaker, in order to provide many other wiring schemes in the limited space:
>Direct extension terminal
>Extension terminal with inter-electrode distance

The busbar and extension terminal can be connected to the inlet or outlet terminal of the circuit breaker.

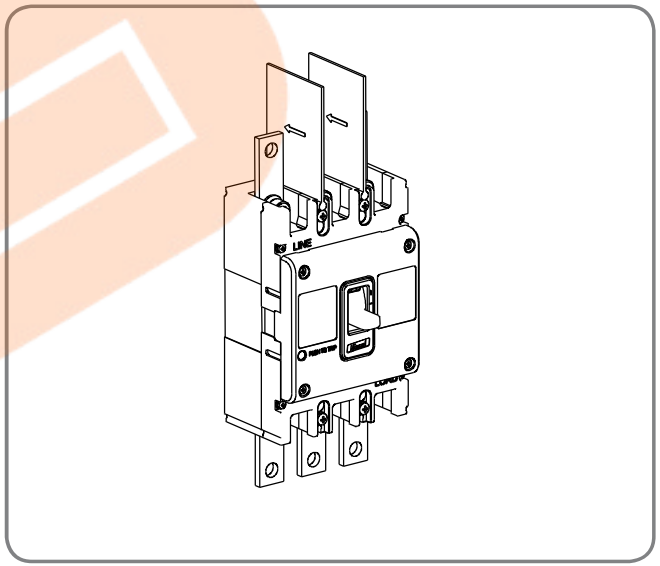

www.electroshaili.ir ۰۲۱-۶۶۳۴۱۴۷۱۴ ۰۹۱۲-۶۳۹۸۹۶۱ ۰۹۱۰-۷۲۴۹۰۷۴ ۰۲۱-۶۶۱۷۰۰۶۲-۵ ۰۲۱-۹۲۰۰۶۶۱۷ (ده خط)

www.electroshaili.com Electro Shaili الکتروشایلی

HDM3 Molded Case Circuit Breaker

Mechanical accessories
Standard:IEC/EN 60947-2

HDM3 Mechanical accessories

Handle operating mechanism
The circuit breaker can be operated by the rotation of the handle and the ergonomically designed rotation handle makes the operation of the circuit breaker more flexible.

2 types of rotation handle operating mechanisms:
>Direct rotation handle (round handle operating mechanism and square handle operating mechanism)
">Extended rotation handle (round extending handle operating mechanism and square extended handle operating mechanism)

User visualization information/settings:
> 3 position indications: OFF, ON and TRIP
>The circuit breaker cannot be switched on when the door is open
>The door cannot be opened when the circuit breaker is switched on
>The axial length of the extended handle can be custom made according to the distance from the back of the circuit breaker to the door.

Schematic Diagram of Handle Operating Mechanism
Installation

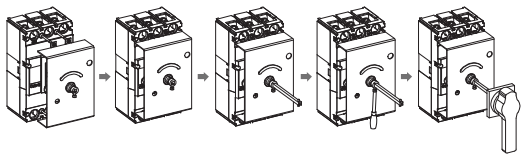

1. Align to the installation direction of the mechanism
2. Tighten the mounting screws
3. Install the lengthened screw
4. Fix the screw
5. Install the lengthened handle





HDM3 Molded Case Circuit Breaker
Mechanical accessories
Standard:IEC/EN 60947-2

HDM3 Mechanical accessories

Round handle operating mechanism

unit (mm)

Circuit breaker mode	A	Remark
HDM3-63/100L/S	65	Size A: 65 or 95 optional, default to 65
HDM3-100M/F/T/N	65	
HDM3-160/250A	65	
HDM3-400/630A	95	
HDM3-800A	95	Size A: 95 or 125 optional, default to 95

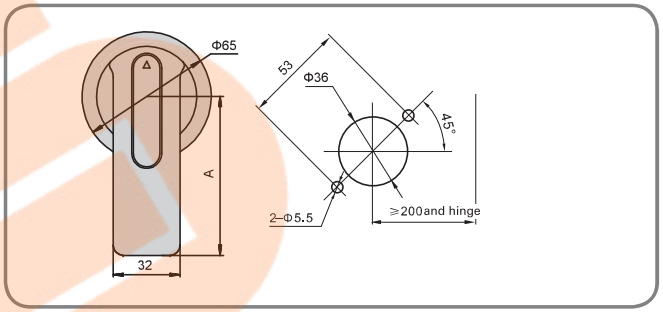

Square handle operating mechanism

Circuit breaker mode	L	H
HDM3-63/100L/S	80	80
HDM3-100M/F/T/N	80	80
HDM3-160/250A	80	80
HDM3-400/630A	80	80
HDM3-800A	80	80

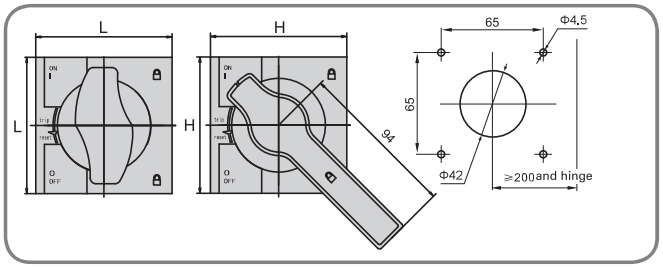

www.electroshaili.ir ۰۲۱-۶۶۳۴۱۴۷۱۴ ۰۹۱۲-۶۳۹۸۹۶۱ ۰۹۱۰-۷۲۴۹۰۷۴ ۰۲۱-۶۶۱۷۰۰۶۲-۵ ۰۲۱-۹۲۰۰۶۶۱۷ (ده خط)

www.electroshaili.com Electro Shaili الکتروشایلی

HDM3 Molded Case Circuit Breaker

Mechanical accessories
Standard:IEC/EN 60947-2

HDM3 Mechanical accessories

Extended rotation operating handle

unit (mm)

Circuit breaker mode	C	D	E	H	K
HDM3-63/100L/S	25	111	75	54	20
HDM3-100M/F/T/N	30	129	92	57	20
HDM3-160/250A	35	143	100	54	20
HDM3-400/630A	44	215	150	78	20
HDM3-800A	70	243	-	76	20

Remark: G means rod length, minimum distance is 50mm, the 150mm is standard, if you need customized, please contact us.

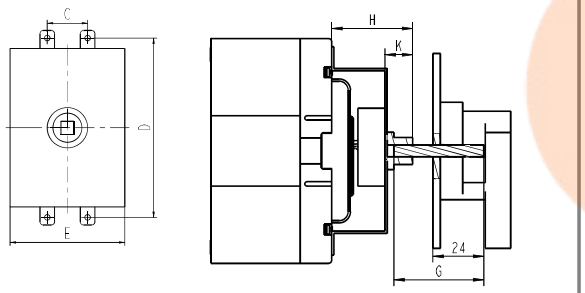

HDM3 Molded Case Circuit Breaker
Mechanical accessories
Standard:IEC/EN 60947-2

Electrical accessories

Auxiliary contact and alarm contact



Auxiliary contact
An accessory connected in the auxiliary circuit of the switching device to indicate the circuit breaker status of ON or not

Alarm contact:
An accessory used to indicate the circuit breaker status of ON or not. When the alarm contact indicates that the circuit breaker is at Trip status, there are the following five possibilities:

- Overload or short circuit fault
- Residual current fault
- Manual test button trip
- Shunt release action
- Line fault and undervoltage release action

Electrical wiring diagram

Accessory name	ON	OFF/TRIP
Auxiliary	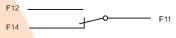	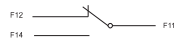
Accessory name	ON/OFF	TRIP
Alarm	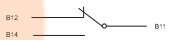	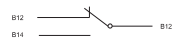

Electrical parameters of auxiliary alarm contact			
Conventional Thermal Current		3A	
Use category (IEC/EN 60947-2)		AC 15	DC13
Working electricity 50Hz	AC 400V	0.3A	
	DC 220V		0.15A

Installation diagram of auxiliary contact

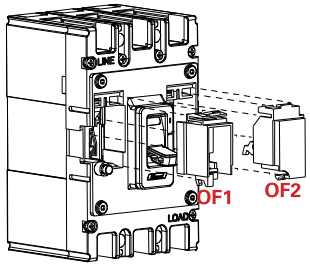

www.electroshaili.ir ۰۲۱-۶۶۳۴۱۴۷۱۴ ۰۹۱۲-۶۳۹۸۹۶۱ ۰۹۱۰-۷۲۴۹۰۷۴ ۰۲۱-۶۶۱۷۰۰۶۲-۵ ۰۲۱-۹۲۰۰۶۶۱۷ (ده خط)

www.electroshaili.com Electro Shaili الکتروشایلی

HDM3 Molded Case Circuit Breaker

Mechanical accessories
Standard:IEC/EN 60947-2

Electrical accessories

Shunt release
>The shunt release shall reliably trip the circuit breaker at the voltage between 70% and 110% of the rated control power voltage U
>The circuit breaker shall be reset on the site after tripping through the shunt release.

	Shunt coil power consumption(W)		
	AC400V	AC230V	DC24V
HDM3-63/100L/S	91.6	76.1	91.2
HDM3-100M/F/T/N	96.8	73	91.2
HDM3-160/250	112	68.6	85.3
HDM3-400	67	62.3	100
HDM3-630	68	58.2	100
HDM3-800	163	153	120
HDM3-1250	183	175	140

When the rated control voltage of the shunt release is DC24V, the maximum length of the copper wire shall meet the following requirements:

Wire area / Rated control power voltage Uc (DC24V)	1.5mm²	2.5mm²
100% Uc	150mm	250mm
85% Uc	100mm	160mm

If not meeting the requirements above, it is recommended to use the figure below to design the shunt release control loop:

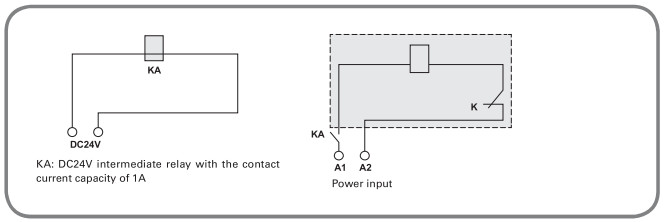

KA: DC24V intermediate relay with the contact current capacity of 1A



HDM3 Molded Case Circuit Breaker
Mechanical accessories
Standard:IEC/EN 60947-2

Electrical accessories

MX installation diagram:

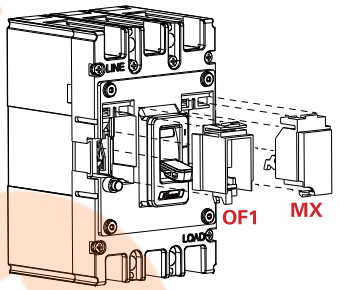

www.electroshaili.ir ۰۲۱-۶۶۳۴۱۴۷۱۴ ۰۹۱۲-۶۳۹۸۹۶۱ ۰۹۱۰-۷۲۴۹۰۷۴ ۰۲۱-۶۶۱۷۰۰۶۲-۵ ۰۲۱-۹۲۰۰۶۶۱۷ (ده خط)

www.electroshaili.com Electro Shaili الکتروشایلی

HDM3 Molded Case Circuit Breaker

Mechanical accessories
Standard:IEC/EN 60947-2

Electrical accessories

Undervoltage release

- The undervoltage release shall reliably trip the circuit breaker at the voltage between 35% and 70% of the rated operational voltage;
- The undervoltage release shall ensure that the circuit breaker can be switched on at the voltage between 85% and 110% of the rated operational voltage;
- The undervoltage release shall prevent the circuit breaker from switching on when voltage is below 35%of the rated operational voltagethe



	Undervoltage coil power consumption(W)	
	AC400V	AC230V
HDM3-63/100L/S	4	3.1
HDM3-100M/F/T/N	3.9	3.2
HDM3-160/250	4.3	3.3
HDM3-400	3.6	2.5
HDM3-630	3.4	2.5
HDM3-800	2	1.6
HDM3-1250	2	1.6

Installation diagram of undervoltage release:

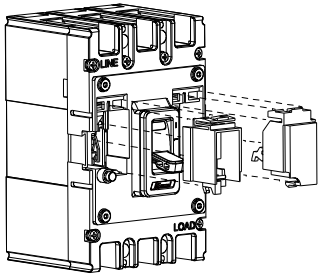

www.electroshaili.ir ۰۲۱-۶۶۳۴۱۴۷۱۴ ۰۹۱۲-۶۳۹۸۹۶۱ ۰۹۱۰-۷۲۴۹۰۷۴ ۰۲۱-۶۶۱۷۰۰۶۲-۵ ۰۲۱-۹۲۰۰۶۶۱۷ (ده خط)

www.electroshaili.com Electro Shaili الکتروشایلی

HDM3 Molded Case Circuit Breaker

Mechanical accessories
Standard:IEC/EN 60947-2

Electrical accessories

Installation drawing of CD2 electric operating mechanism

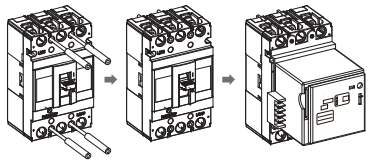

After tripping of the breaker with an electrically operated mechanism, the electrically operated mechanism must be opened first before closed.

Electric wiring diagram of CD2 electric operating mechanism

AC230V、AC400V and DC220V

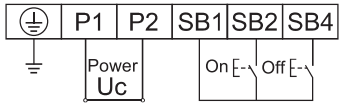

HDM3 Molded Case Circuit Breaker

Electric accessories
Standard:IEC/EN 60947-2

HDM3 Installation sites of HDM3 electric accessories

□ Alarm contact ■ Auxiliary contact ● Shunt release ○ Undervoltage release



Electromagnetic type	Compound	Accessory name	HDM3-63/100L/S	HDM3-100M/F/T/N	HDM3-160/250	HDM3-400/630	HDM3-800	HDM3-1250
208	308	Alarm code	□	□	□	□	□	
210	310	Shunt release	●	●	●	●	●	●
220	320	Auxiliary contact	■	■	■	■	■	■
230	330	Undervoltage release	○	○	○	○	○	○
240	340	Shunt+ auxiliary	■ ●	■ ●	■ ●	■ ●	● ■	■ ●
250	350	Shunt+ undervoltage	○ ●	○ ●	○ ●	○ ●	○ ●	○ ●
260	360	Two groups of auxiliary contacts	■ ■	■ ■	■ ■	■ ■	■ ■	■ ■
270	270	Auxiliary+ undervoltage	○ ■	○ ■	○ ■	○ ■	○ ■	○ ■
218	318	Shunt + alarm	□ ●	□ ●	□ ●	□ ●	□ ●	
228	328	Auxiliary+ alarm	□■	□■	□■	□■	□■	
238	338	Undervoltage+ alarm	○ □	○ □	○ □	○ □	○□	
248	348	Shunt +auxiliary+alarm	□■ ●	□■ ●	□■ ●	□■ ●	□■ ●	
268	368	Two groups of auxiliary+alarm	□■ ■	□■ ■	□■ ■	□■ ■	□■ ■	
278	378	Auxiliary +undervoltage+ alarm	○ □■	○ □■	○ □■	○ □■		

Note: 2xx refers to the circuit breaker body only with a magnetic release; 3xx refers to the circuit breaker body with thermal trip and electromagnetic trip.

www.electroshaili.ir ۰۲۱-۶۶۳۴۱۴۷۱۴ ۰۹۱۲-۶۳۹۸۹۶۱ ۰۹۱۰-۷۲۴۹۰۷۴ ۰۲۱-۶۶۱۷۰۰۶۲-۵ ۰۲۱-۹۲۰۰۶۶۱۷ (ده خط)

www.electroshaili.com Electro Shaili الکتروشایلی

HDM3 Molded Case Circuit Breaker

Installation dimensions-Front
Standard:IEC/EN 60947-2

Installation dimensions

Fixed front installation dimensions

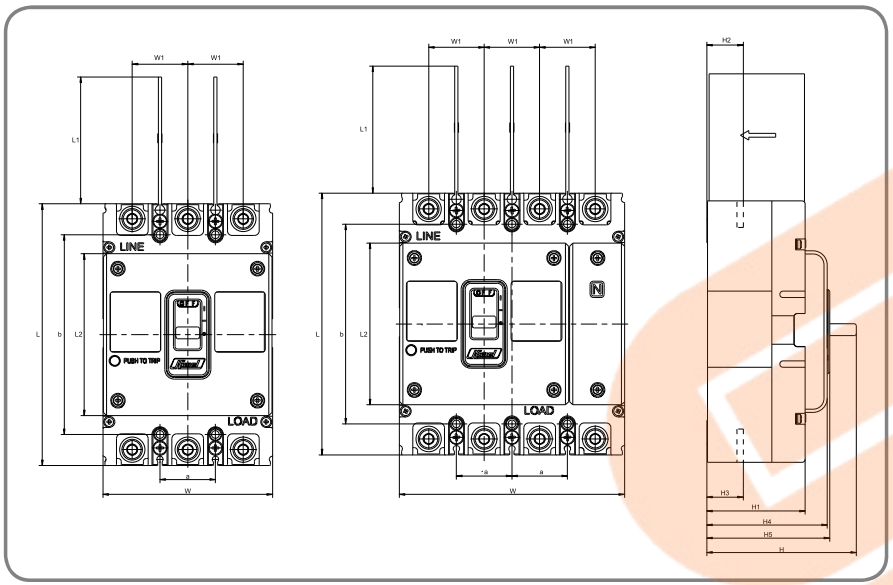

Shell frame	Number of poles	Overall dimension											Installation dimension	
		L	L1	L2	W	W1	H	H1	H2	H3	H4	H5	a	b
63/100L/S	3P	130	50	83	75	25	81.5	54	24	24	68	70.5	25	111
	4P				100									
100M/F/T/N	3P	150	50	96	92	30	111.5	81	28.5	28	93.5	95.5	30	129
	4P				122									
160/250S	3P	165	80	102	107	35	94.5	62	23	23	76	77.5	35	126
	4P				142									
160/250FN	3P	165	80	102	107	35	112.5	80	23	23	94	95.5	35	126
	4P				142									
400	3P	257	104.5	150	150	48	145.9	96.2	36	36.5	107.5	112.5	44	215
	4P				198									
630	3P	257	104.5	150	150	48	145.9	96.2	38	39	107.5	112.5	44	215
	4P				198									
800	3P	280	104.5	102	210	70	146.5	97.5	32.5	35.5	100	114	70	243
	4P				280									
1250	3P	406	104	97.2	210	70	197.5	134	58	60	140	158.5	70	376

HDM3 Molded Case Circuit Breaker

Installation dimensions-Front
Standard:IEC/EN 60947-2

Installation dimensions

Fixed front installation hole dimensions

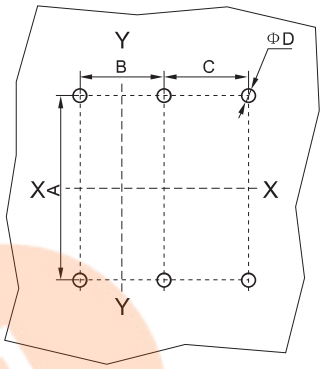

Note: X-X and Y-Y is the center of the three-pole breaker

Shell frame	Number of poles	A	B	C	D
63/100L/S	3P	111	25	/	4.5
	4P			25	
100M/F/T/N	3P	129	30	/	5
	4P			30	
160/250	3P	126	35	/	5.5
	4P			35	
400/630	3P	215	44	/	6.5
	4P			/	
800	3P	243	70	/	7.5
	4P			70	
1250	3P	376	70	/	10.5

www.electroshaili.ir ۰۲۱-۶۶۳۴۱۴۷۱۴ ۰۹۱۲-۶۳۹۸۹۶۱ ۰۹۱۰-۷۲۴۹۰۷۴ ۰۲۱-۶۶۱۷۰۰۶۲-۵ ۰۲۱-۹۲۰۰۶۶۱۷ (ده خط)

www.electroshaili.com Electro Shaili الکتروشایلی

HDM3 Molded Case Circuit Breaker

Installation dimensions-Rear
Standard:IEC/EN 60947-2

Installation dimensions-Rear

Fixed rear installation dimensions

Circuit breaker mode	H1	H2	D
HDM3-63/100L/S	80	67	8
HDM3-100M/F/T/N	97	47	8
HDM3-160	102	72	10
HDM3-250	102	72	10

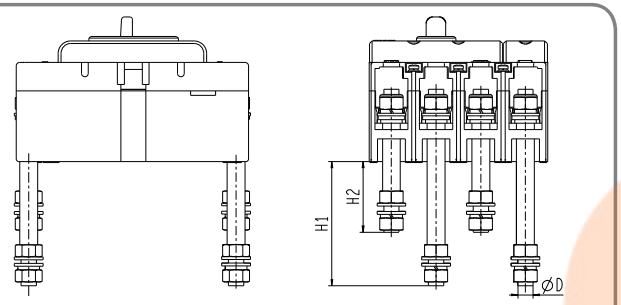

HDM3 63-250 Installation dimension drawing

Installation dimensions

Circuit breaker mode	H1	H2	D
HDM3-400	98	134	12.5
HDM3-630	98	134	12.5
HDM3-800	107	141	12.5

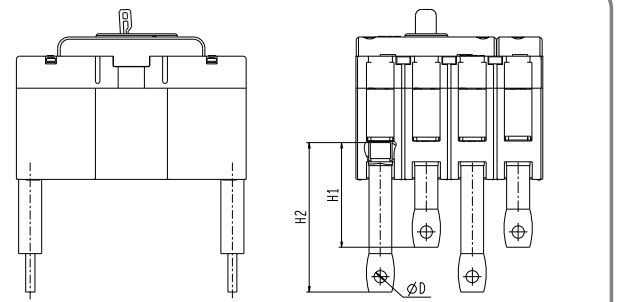

HDM3 400-800 Installation dimension drawing

HDM3 Molded Case Circuit Breaker
Installation dimensions-Rear
Standard:IEC/EN 60947-2

Installation dimensions-Rear

Fixed rear installation hole dimensions

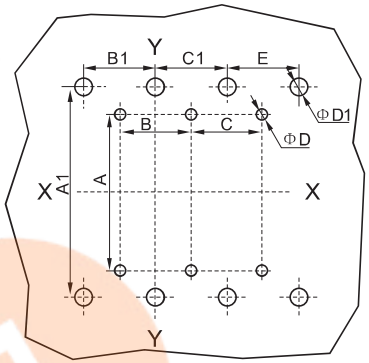

Note: X-X and Y-Y is the center of the three-pole breaker

Shell frame	Number of poles	A	B	C	D	A1	B1	C1	E	D
63/100L/S	3P	111	25	-	4.5	116	25	25	-	12
	4P			25					25	
100M/F/T/N	3P	129	30	-	5	132	30	30	-	12
	4P			30					30	
160/250	3P	126	35	-	5.5	145	35	35	-	15
	4P			35					35	
400/630	3P	215	44	-	6.5	225	48	48	-	18
	4P			-					48	
800	3P	243	70	-	7.5	243	70	70	-	27
	4P			70					70	

www.electroshaili.ir ۰۲۱-۶۶۳۴۱۴۷۱۴ ۰۹۱۲-۶۳۹۸۹۶۱ ۰۹۱۰-۷۲۴۹۰۷۴ ۰۲۱-۶۶۱۷۰۰۶۲-۵ ۰۲۱-۹۲۰۰۶۶۱۷ (ده خط)

www.electroshaili.com Electro Shaili الکتروشایلی

HDM3 Molded Case Circuit Breaker

Installation dimensions-Plug in
Standard:IEC/EN 60947-2

Installation dimensions-Plug in

Plug-in front installation dimensions
Installation dimensions

Circuit breaker mode	A	B	E	F	$G_{(3P/4P)}$	H	$L_{(3P/4P)}$	L1	L2	M	N	K	d
63/100S/125S	91.5	48.2	111	60	50/75	145	75/100	25	25	190	173	22.5	6
100F/N/125T	100.5	56.2	132	67	60/90	170	90/120	30	30	216	198	25	6.5
160/250A	108.5	73.2	144	74	70/105	191	105/140	35	35	243	223	37.5	8.5

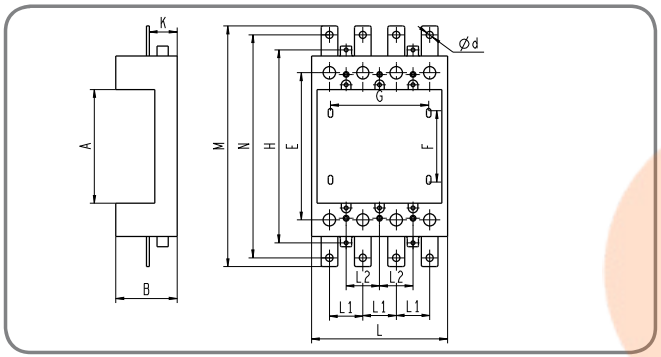

Plug-in front hot position drawing

Circuit breaker mode	Number of poles	A1	B1	D
63/100L/S	3	50	60	5.5
	4	75		
100M/F/T/N	3	60	67	6.5
	4	90		
160/250	3	70	74	6.5
	4	105		

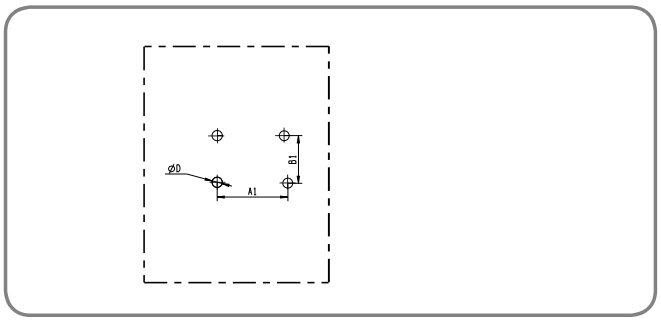

HDM3 Molded Case Circuit Breaker

Installation dimensions-Plug in
Standard:IEC/EN 60947-2

Installation dimensions-Plug in

Plug-in rear installation dimensions
Installation dimensions

Circuit breaker mode	A	B	C	D	E	F	G	H	L	L1	L2
63/100L/S	92	51.5	154	2.5	116	60	76	146	100	25	50
100M/F/T/N	102	55	180	3.5	132	60	90	173	122	30	60
160/250A	109.5	72	200	4	145	74.5	105	190	140	35	35
400/630A	170	80	-	-	225	145	88/132	-	152/200	48	44
800A	155	87	-	-	243	143	90/160	-	210/280	70	70/140

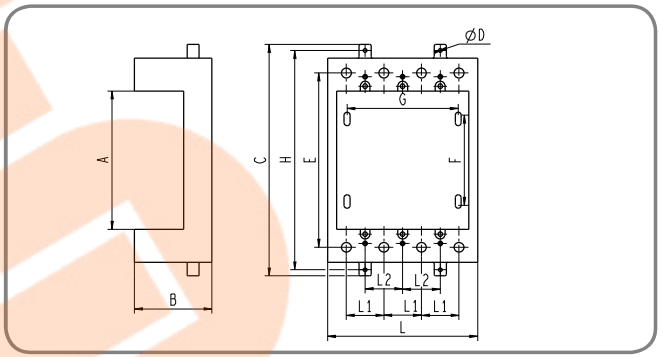

Circuit breaker mode	Number of poles	A	A1	B	B1	C	D
63/100L/S	3	79	50	30	60	90	5.5
	4	104	75				
100M/F/T/N	3	94	60	40	67	90	6.5
	4	124	90				
160/250	3	110	70	45	74	100	6.5
	4	145	105				
400/630	3	157	88	60	145	170	8.5
	4	205	132				
800	3	212	140	62	143	185	11
	4	282	210				

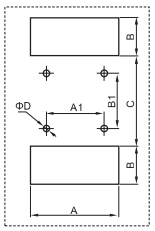

Plug-in rear installation hole pattern

www.electroshaili.ir ۰۲۱-۶۶۳۴۱۴۷۱۴ ۰۹۱۲-۶۳۹۸۹۶۱ ۰۹۱۰-۷۲۴۹۰۷۴ ۰۲۱-۶۶۱۷۰۰۶۲-۵ ۰۲۱-۹۲۰۰۶۶۱۷ (ده خط)

www.electroshaili.com Electro Shaili الکتروشایلی

HDM3 Molded Case Circuit Breaker

Installation dimensions-Plug in
Standard:IEC/EN 60947-2

HDM3 Drawable installation diagram

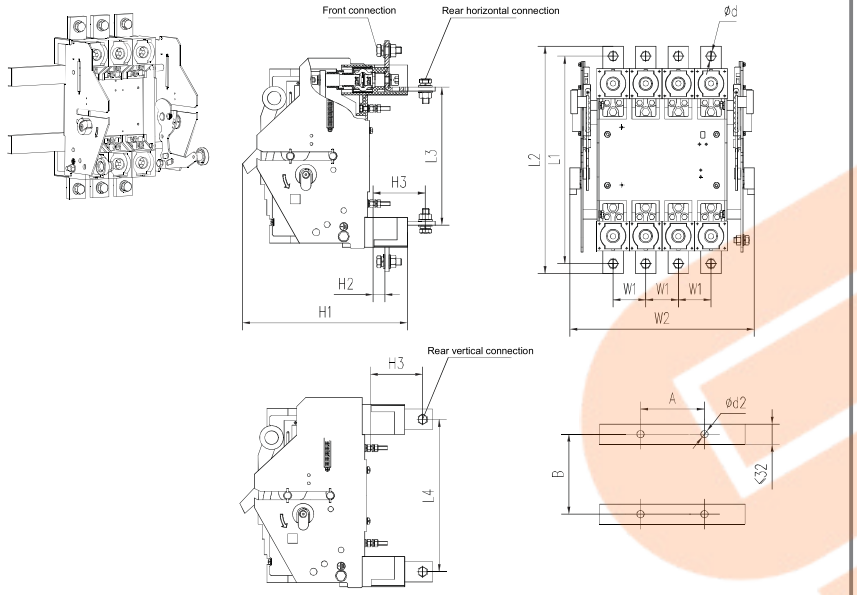

Frame	Pole	Overview Dimension										Installation Size		
		L1	L2	L3	L4	H1	H2	H3	W1	W2	ød1	A	B	ød2
HDM3-400	3P	310	339	203	223	253	17.5	77	48	223	ø11	96	140	ø7
	4P	310	339	203	223	253	17.5	77	48	271	ø11	144	140	ø7
HDM3-630	3P	310	339	207	223	253	17.5	77	48	223	ø11	96	140	ø7
	4P	310	339	207	223	253	17.5	77	48	271	ø11	144	140	ø7
HDM3-800	3P	367	410	241	231	238	-26	73	70	289	ø13	140	131	ø7
	4P	367	410	241	231	238	-26	73	70	359	ø13	210	131	ø7

HDM3 Molded Case Circuit Breaker

Installation dimensions-Plug in
Standard:IEC/EN 60947-2

HDM3 Drawable installation hole diagram

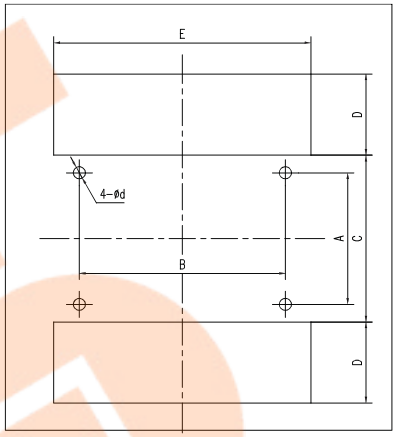

Frame	Hole size of rear connection							
	A	B		C	D	E		d
		3P	4P			3P	4P	
HDM3-400	140	96	144	178	47	147	195	7
HDM3-630	140	96	144	178	47	147	195	7
HDM3-800	131	140	210	170	77	213	283	7

Frame	Hole size of front connection							
	A	B		C	D	E		d
		3P	4P			3P	4P	
HDM3-400	140	96	144	178	90	147	195	7
HDM3-630	140	96	144	178	90	147	195	7
HDM3-800	131	140	210	170	130	213	283	7

Remark: HDM3-630 frame withdrawable connection is derating to 500A.

www.electroshaili.ir ۰۲۱-۶۶۳۴۱۴۷۱۴ ۰۹۱۲-۶۳۹۸۹۶۱ ۰۹۱۰-۷۲۴۹۰۷۴ ۰۲۱-۶۶۱۷۰۰۶۲-۵ ۰۲۱-۹۲۰۰۶۶۱۷ (ده خط)

www.electroshaili.com Electro Shaili الکتروشایلی

HDM3 Molded Case Circuit Breaker

Trip curve
Standard:IEC/EN 60947-2

HDM3 series Trip curve

HDM3-63
HDM3-63 40-63A Black line:power distribution protection, red line:motor protection;

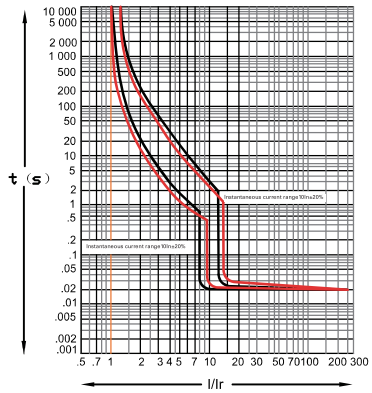

HDM3-100S
HDM3-100S 40A-100A Black line:power distribution protection,red line:motor protection;

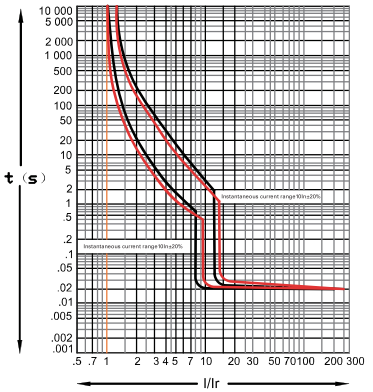

HDM3 Molded Case Circuit Breaker

Trip curve
Standard:IEC/EN 60947-2

HDM3 series Trip curve

HDM3-100M/F/T/N
HDM3-100M/F/T/N 40A-100A Black line: power distribution protection , red line: motor protection;

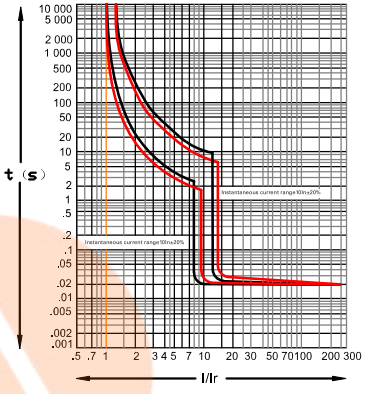

HDM3-160/250
Black line: power distribution protection , red line: motor protection;

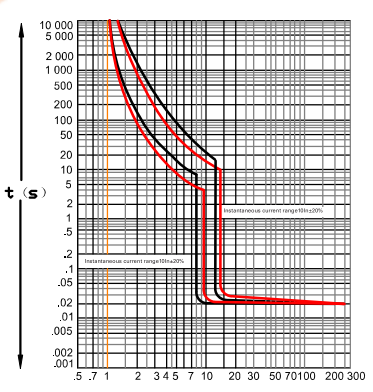

www.electroshaili.ir ۰۲۱-۶۶۳۴۱۴۷۱۴ ۰۹۱۲-۶۳۹۸۹۶۱ ۰۹۱۰-۷۲۴۹۰۷۴ ۰۲۱-۶۶۱۷۰۰۶۲-۵ ۰۲۱-۹۲۰۰۶۶۱۷ (ده خط)

www.electroshaili.com Electro Shaili الکتروشایلی

HDM3 Molded Case Circuit Breaker

Trip curve
Standard:IEC/EN 60947-2

HDM3 series Trip curve

HDM3-400
Black line: power distribution protection , red line: motor protection;

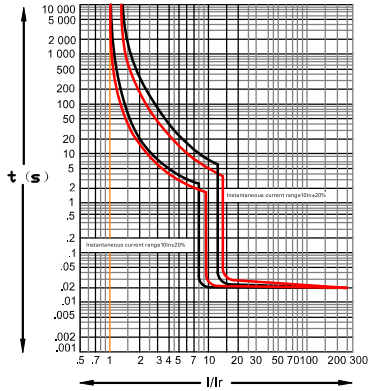

HDM3-630
Black line: power distribution protection , red line: motor protection;

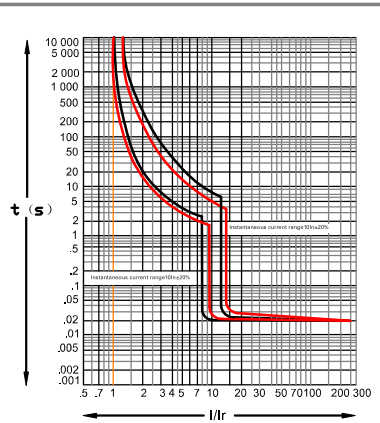

HDM3 Molded Case Circuit Breaker

Trip curve
Standard:IEC/EN 60947-2

HDM3 series Trip curve

HDM3-800A

HDM3-800A 630A
For power distribution

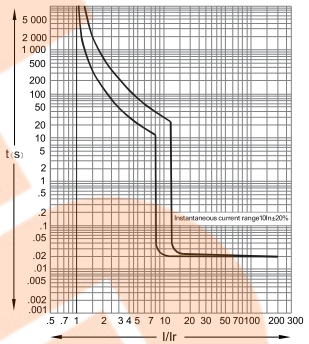

HDM3-800A 700A~800A
For power distribution

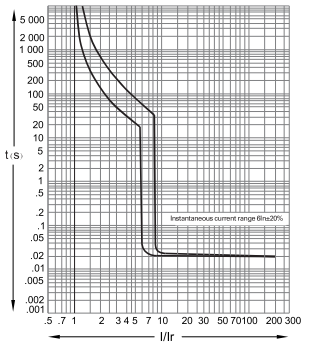

www.electroshaili.ir | ۰۲۱-۶۶۳۴۱۴۷۱۴ | ۰۹۱۲-۶۳۹۸۹۶۱ | ۰۹۱۰-۷۲۴۹۰۷۴ | ۰۲۱-۶۶۱۷۰۰۶۲-۵ | ۰۲۱-۹۲۰۰۶۶۱۷ (ده خط)

www.electroshaili.com Electro Shaili الکتروشایلی

HDM3 Molded Case Circuit Breaker

Trip curve
Standard:IEC/EN 60947-2

HDM3 series Trip curve

HDM3-1250A

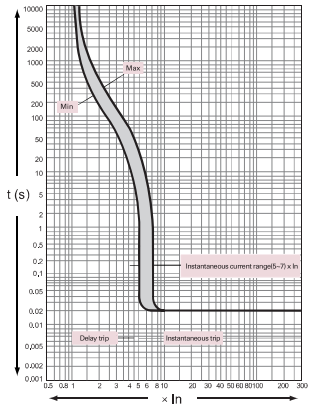

HDM3 Molded Case Circuit Breaker

Repaire and maintenance
Standard:IEC/EN 60947-2

HDM3 Repaire and maintenance

Operated and debug HDM3
First, check the circuit breaker handle status
1.The normal status of delivered products is at "Trip"position
2. Press the handle to the "OFF" position
3. Close the breaker and push the handle to "ON" position.
4. Tap the trip button and the breaker handle returns to "Trip" position.

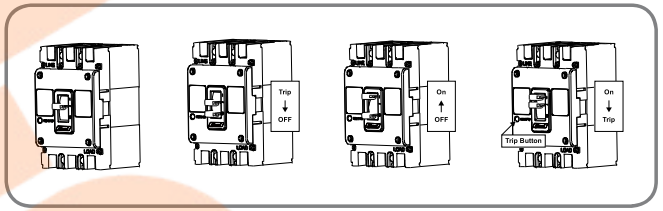

Repaire and maintenance
·The repair and maintenance shall be implemented by qualified persons
·The superior power supply must be cut off to ensure that the incoming terminals are electrically neutral
·Conduct maintenance and protection once a year under normal operating conditions with the maintenance content as follows:

Type	Item	Content
Moulded case circuit breaker	Appearance	No dust or condensation .Clean is needed if there's any.
		No damage
		Non-discoloring shell and connectors
	Flash barrier	Insert the flash barrier in place according to the instructions
	Connector connection	Tighten without looseness according to the Rated Torque Chart
	Handle on/off operation	Operation shall be flexible
	Trip button	The handle indicates trip after the trip of the product
	Insulation test	Conduct a test according to the product test requirements On the first page of User Manuel
Circuit breaker with accessories	With undervoltage release	The circuit breaker shall be disconnected reliably and the handle indicates trip if the undervoltage release is powered off
	With undervoltage release	The circuit breaker shall be disconnected reliably and the handle indicates trip if the release is provided with rated voltage
	With auxiliary contact	The switching signal of the auxiliary contact shall be normal when the circuit breaker is connected and then disconnected
	With alarm contact	The switching signal of the alarm contact shall not function when the circuit breaker is closed and then tripped by pressing the trip button.

Low-voltage Distribution

www.electroshaili.ir ۰۲۱-۶۶۳۴۱۴۷۱۴ ۰۹۱۲-۶۳۹۸۹۶۱ ۰۹۱۰-۷۲۴۹۰۷۴ ۰۲۱-۶۶۱۷۰۰۶۲-۵ ۰۲۱-۹۲۰۰۶۶۱۷ (ده خط)

www.electroshaili.com Electro Shaili الکتروشایلی

HDM3 Molded Case Circuit Breaker

Appendix
Standard:IEC/EN 60947-2

Appendix Torque table and connecting conductor

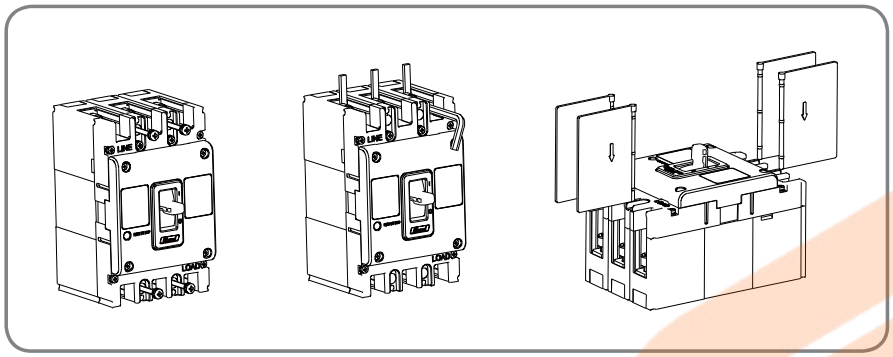

Torque table

Shell frame	Hexagon	Torque force N.m
63/100	M8	9.5-10.5
160/250	M8	9.5-10.5
400/630	M10	19.5-20.5
800/1250	M12	29.5-30.5

Connecting conductor mm²

Rated current A	10	16/20	25	32	40/50	63	80	100	125	140	160	180/200/225	250	315	400	500	600	700/800	1000	1250
Conductor cross-section mm²	1.5	3	4	6	10	16	25	35	50	50	70	95	120	185	240	2*150	2*185	2*240	2*500	2*500

HDM3 Molded Case Circuit Breaker

Reference
Standard:IEC/EN 60947-2

Material order number

HDM3 Fixed front connection Power distribution protection Thermal magnetic tripping

Product Specification	In(A)	Icu(kA)	Ics(kA)	Order Reference	Order Reference	Order Reference
				Fixed front 3 pole	Fixed front 4-pole A type	Fixed front 4-pole B type
HDM3-63L	10	18	18	HDM363L1033XX	HDM363L10A3XX	HDM363L10B3XX
	16	18	18	HDM363L1633XX	HDM363L16A3XX	HDM363L16B3XX
	20	18	18	HDM363L2033XX	HDM363L20A3XX	HDM363L20B3XX
	25	18	18	HDM363L2533XX	HDM363L25A3XX	HDM363L25B3XX
	32	18	18	HDM363L3233XX	HDM363L32A3XX	HDM363L32B3XX
	40	18	18	HDM363L4033XX	HDM363L40A3XX	HDM363L40B3XX
	50	18	18	HDM363L5033XX	HDM363L50A3XX	HDM363L50B3XX
	63	18	18	HDM363L6333XX	HDM363L63A3XX	HDM363L63B3XX
HDM3-63S	10	25	18	*HDM363S1033XX	HDM363S10A3XX	HDM363S10B3XX
	16	25	18	*HDM363S1633XX	HDM363S16A3XX	HDM363S16B3XX
	20	25	18	*HDM363S2033XX	HDM363S20A3XX	HDM363S20B3XX
	25	25	18	*HDM363S2533XX	HDM363S25A3XX	HDM363S25B3XX
	32	25	18	*HDM363S3233XX	HDM363S32A3XX	HDM363S32B3XX
	40	25	18	*HDM363S4033XX	HDM363S40A3XX	HDM363S40B3XX
	50	25	18	*HDM363S5033XX	HDM363S50A3XX	HDM363S50B3XX
	63	25	18	*HDM363S6333XX	HDM363S63A3XX	HDM363S63B3XX
HDM3-63M	10	30	30	HDM363M1033XX	HDM363M10A3XX	HDM363M10B3XX
	16	30	30	HDM363M1633XX	HDM363M16A3XX	HDM363M16B3XX
	20	30	30	HDM363M2033XX	HDM363M20A3XX	HDM363M20B3XX
	25	30	30	HDM363M2533XX	HDM363M25A3XX	HDM363M25B3XX
	32	30	30	HDM363M3233XX	HDM363M32A3XX	HDM363M32B3XX
	40	30	30	HDM363M4033XX	HDM363M40A3XX	HDM363M40B3XX
	50	30	30	HDM363M5033XX	HDM363M50A3XX	HDM363M50B3XX
	63	30	30	HDM363M6333XX	HDM363M63A3XX	HDM363M63B3XX
HDM3-63F	10	50	30	*HDM363F1033XX	HDM363F10A3XX	HDM363F10B3XX
	16	50	30	*HDM363F1633XX	HDM363F16A3XX	HDM363F16B3XX
	20	50	30	*HDM363F2033XX	HDM363F20A3XX	HDM363F20B3XX
	25	50	30	*HDM363F2533XX	HDM363F25A3XX	HDM363F25B3XX
	32	50	30	*HDM363F3233XX	HDM363F32A3XX	HDM363F32B3XX
	40	50	30	*HDM363F4033XX	HDM363F40A3XX	HDM363F40B3XX
	50	50	30	*HDM363F5033XX	HDM363F50A3XX	HDM363F50B3XX
	63	50	30	*HDM363F6333XX	HDM363F63A3XX	HDM363F63B3XX
HDM3-100L	10	18	18	HDM3100L1033XX	HDM3100L10A3XX	HDM3100L10B3XX
	16	18	18	HDM3100L1633XX	HDM3100L16A3XX	HDM3100L16B3XX
	20	18	18	HDM3100L2033XX	HDM3100L20A3XX	HDM3100L20B3XX
	25	18	18	HDM3100L2533XX	HDM3100L25A3XX	HDM3100L25B3XX
	32	18	18	HDM3100L3233XX	HDM3100L32A3XX	HDM3100L32B3XX
	40	18	18	HDM3100L4033XX	HDM3100L40A3XX	HDM3100L40B3XX
	50	18	18	HDM3100L5033XX	HDM3100L50A3XX	HDM3100L50B3XX
	63	18	18	HDM3100L6333XX	HDM3100L63A3XX	HDM3100L63B3XX
	80	18	18	HDM3100L8033XX	HDM3100L80A3XX	HDM3100L80B3XX
	100	18	18	HDM3100L10033XX	HDM3100L100A3XX	HDM3100L100B3XX

The reference with "*" means that it has 40℃ and 50℃. Please add "T" at the end as 50℃ reference.

www.electroshaili.ir ۰۲۱-۶۶۳۴۱۴۷۱۴ ۰۹۱۲-۶۳۹۸۹۶۱ ۰۹۱۰-۷۲۴۹۰۷۴ ۰۲۱-۶۶۱۷۰۰۶۲-۵ ۰۲۱-۹۲۰۰۶۶۱۷ (ده خط)

www.electroshaili.com Electro Shaili الکتروشایلی

HDM3 Molded Case Circuit Breaker

Reference
Standard:IEC/EN 60947-2

Material order number

HDM3 Fixed front connection Power distribution protection Thermal magnetic tripping

Product Specification	In(A)	Icu(KA)	Ics(KA)	Order Reference	Order Reference	Order Reference
				Fixed front 3 pole	Fixed front 4-pole A type	Fixed front 4-pole B type
HDM3-100S	10	25	18	HDM3100S1033XX	HDM3100S10A3XX	HDM3100S10B3XX
	16	25	18	HDM3100S1633XX	HDM3100S16A3XX	HDM3100S16B3XX
	20	25	18	HDM3100S2033XX	HDM3100S20A3XX	HDM3100S20B3XX
	25	25	18	HDM3100S2533XX	HDM3100S25A3XX	HDM3100S25B3XX
	32	25	18	HDM3100S3233XX	HDM3100S32A3XX	HDM3100S32B3XX
	40	25	18	HDM3100S4033XX	HDM3100S40A3XX	HDM3100S40B3XX
	50	25	18	HDM3100S5033XX	HDM3100S50A3XX	HDM3100S50B3XX
	63	25	18	HDM3100S6333XX	HDM3100S63A3XX	HDM3100S63B3XX
	80	25	18	*HDM3100S8033XX	HDM3100S80A3XX	HDM3100S80B3XX
	100	25	18	*HDM3100S10033XX	HDM3100S100A3XX	HDM3100S100B3XX
HDM3-100M	40	26	26	HDM3100M4033XX	HDM3100M40A3XX	HDM3100M40B3XX
	50	26	26	HDM3100M5033XX	HDM3100M50A3XX	HDM3100M50B3XX
	63	26	26	HDM3100M6333XX	HDM3100M63A3XX	HDM3100M63B3XX
	80	26	26	HDM3100M8033XX	HDM3100M80A3XX	HDM3100M80B3XX
	100	26	26	HDM3100M10033XX	HDM3100M100A3XX	HDM3100M100B3XX
HDM3-100F	40	35	26	*HDM3100F4033XX	HDM3100F40A3XX	HDM3100F40B3XX
	50	35	26	*HDM3100F5033XX	HDM3100F50A3XX	HDM3100F50B3XX
	63	35	26	*HDM3100F6333XX	HDM3100F63A3XX	HDM3100F63B3XX
	80	35	26	*HDM3100F8033XX	HDM3100F80A3XX	HDM3100F80B3XX
	100	35	26	*HDM3100F10033XX	HDM3100F100A3XX	HDM3100F100B3XX
HDM3-100T	40	30	30	HDM3100T4033XX	HDM3100T40A3XX	HDM3100T40B3XX
	50	30	30	HDM3100T5033XX	HDM3100T50A3XX	HDM3100T50B3XX
	63	30	30	HDM3100T6333XX	HDM3100T63A3XX	HDM3100T63B3XX
	80	30	30	HDM3100T8033XX	HDM3100T80A3XX	HDM3100T80B3XX
	100	30	30	HDM3100T10033XX	HDM3100T100A3XX	HDM3100T100B3XX
HDM3-100N	40	50	30	*HDM3100N4033XX	HDM3100N40A3XX	HDM3100N40B3XX
	50	50	30	*HDM3100N5033XX	HDM3100N50A3XX	HDM3100N50B3XX
	63	50	30	*HDM3100N6333XX	HDM3100N63A3XX	HDM3100N63B3XX
	80	50	30	*HDM3100N8033XX	HDM3100N80A3XX	HDM3100N80B3XX
	100	50	30	*HDM3100N10033XX	HDM3100N100A3XX	HDM3100N100B3XX
HDM3-160L	100	21	21	HDM3160L10033XX	HDM3160L100A3XX	HDM3160L100B3XX
	125	21	21	HDM3160L12533XX	HDM3160L125A3XX	HDM3160L125B3XX
	140	21	21	HDM3160L14033XX	HDM3160L140A3XX	HDM3160L140B3XX
	160	21	21	HDM3160L16033XX	HDM3160L160A3XX	HDM3160L160B3XX
HDM3-160S	100	35	21	*HDM3160S10033XX	HDM3160S100A3XX	HDM3160S100B3XX
	125	35	21	*HDM3160S12533XX	HDM3160S125A3XX	HDM3160S125B3XX
	140	35	21	*HDM3160S14033XX	HDM3160S140A3XX	HDM3160S140B3XX
	160	35	21	*HDM3160S16033XX	HDM3160S160A3XX	HDM3160S160B3XX
HDM3-160M	100	30	30	HDM3160M10033XX	HDM3160M160A3XX	HDM3160M100B3XX
	125	30	30	HDM3160M12533XX	HDM3160M100A3XX	HDM3160M125B3XX
	140	30	30	HDM3160M14033XX	HDM3160M125A3XX	HDM3160M140B3XX
	160	30	30	HDM3160M16033XX	HDM3160M140A3XX	HDM3160M160B3XX

The reference with "*" means that it has 40℃ and 50℃. Please add "T" at the end as 50℃ reference.

HDM3 Molded Case Circuit Breaker

Reference
Standard:IEC/EN 60947-2

Material order number

HDM3 Fixed front connection Power distribution protection Thermal magnetic tripping

Product Specification	In(A)	Icu(KA)	Ics(KA)	Order Reference	Order Reference	Order Reference
				Fixed front 3 pole	Fixed front 4-pole A type	Fixed front 4-pole B type
HDM3-160F	100	50	30	*HDM3160F10033XX	HDM3160F100A3XX	HDM3160F100B3XX
	125	50	30	*HDM3160F12533XX	HDM3160F125A3XX	HDM3160F125B3XX
	140	50	30	*HDM3160F14033XX	HDM3160F140A3XX	HDM3160F140B3XX
	160	50	30	*HDM3160F16033XX	HDM3160F160A3XX	HDM3160F160B3XX
HDM3-160T	100	36	36	HDM3160T10033XX	HDM3160T100A3XX	HDM3160T100B3XX
	125	36	36	HDM3160T12533XX	HDM3160T125A3XX	HDM3160T125B3XX
	140	36	36	HDM3160T14033XX	HDM3160T140A3XX	HDM3160T140B3XX
	160	36	36	HDM3160T16033XX	HDM3160T160A3XX	HDM3160T160B3XX
HDM3-160N	100	60	36	*HDM3160N10033XX	HDM3160N100A3XX	HDM3160N100B3XX
	125	60	36	*HDM3160N12533XX	HDM3160N125A3XX	HDM3160N125B3XX
	140	60	36	*HDM3160N14033XX	HDM3160N140A3XX	HDM3160N140B3XX
	160	60	36	*HDM3160N16033XX	HDM3160N160A3XX	HDM3160N160B3XX
HDM3-250L	100	21	21	HDM3250L10033XX	HDM3250L100A3XX	HDM3250L100B3XX
	125	21	21	HDM3250L12533XX	HDM3250L125A3XX	HDM3250L125B3XX
	140	21	21	HDM3250L14033XX	HDM3250L140A3XX	HDM3250L140B3XX
	160	21	21	HDM3250L16033XX	HDM3250L160A3XX	HDM3250L160B3XX
	180	21	21	HDM3250L18033XX	HDM3250L180A3XX	HDM3250L180B3XX
	200	21	21	HDM3250L20033XX	HDM3250L200A3XX	HDM3250L200B3XX
	225	21	21	HDM3250L22533XX	HDM3250L225A3XX	HDM3250L225B3XX
	250	21	21	HDM3250L25033XX	HDM3250L250A3XX	HDM3250L250B3XX
HDM3-250S	100	35	21	*HDM3250S10033XX	HDM3250S100A3XX	HDM3250S100B3XX
	125	35	21	*HDM3250S12533XX	HDM3250S125A3XX	HDM3250S125B3XX
	140	35	21	*HDM3250S14033XX	HDM3250S140A3XX	HDM3250S140B3XX
	160	35	21	*HDM3250S16033XX	HDM3250S160A3XX	HDM3250S160B3XX
	180	35	21	*HDM3250S18033XX	HDM3250S180A3XX	HDM3250S180B3XX
	200	35	21	*HDM3250S20033XX	HDM3250S200A3XX	HDM3250S200B3XX
	225	35	21	*HDM3250S22533XX	HDM3250S225A3XX	HDM3250S225B3XX
	250	35	21	*HDM3250S25033XX	HDM3250S250A3XX	HDM3250S250B3XX
HDM3-250M	100	30	30	HDM3250M10033XX	HDM3250M100A3XX	HDM3250M100B3XX
	125	30	30	HDM3250M12533XX	HDM3250M125A3XX	HDM3250M125B3XX
	140	30	30	HDM3250M14033XX	HDM3250M140A3XX	HDM3250M140B3XX
	160	30	30	HDM3250M16033XX	HDM3250M160A3XX	HDM3250M160B3XX
	180	30	30	HDM3250M18033XX	HDM3250M180A3XX	HDM3250M180B3XX
	200	30	30	HDM3250M20033XX	HDM3250M200A3XX	HDM3250M200B3XX
	225	30	30	HDM3250M22533XX	HDM3250M225A3XX	HDM3250M225B3XX
	250	30	30	HDM3250M25033XX	HDM3250M250A3XX	HDM3250M250B3XX
HDM3-250F	100	50	30	*HDM3250F10033XX	HDM3250F100A3XX	HDM3250F100B3XX
	125	50	30	*HDM3250F12533XX	HDM3250F125A3XX	HDM3250F125B3XX
	140	50	30	*HDM3250F14033XX	HDM3250F140A3XX	HDM3250F140B3XX
	160	50	30	*HDM3250F16033XX	HDM3250F160A3XX	HDM3250F160B3XX
	180	50	30	*HDM3250F18033XX	HDM3250F180A3XX	HDM3250F180B3XX
	200	50	30	*HDM3250F20033XX	HDM3250F200A3XX	HDM3250F200B3XX
	225	50	30	*HDM3250F20033XX	HDM3250F225A3XX	HDM3250F225B3XX
	250	50	30	*HDM3250F25033XX	HDM3250F250A3XX	HDM3250F250B3XX

The reference with "*" means that it has 40℃ and 50℃. Please add "T" at the end as 50℃ reference.

www.electroshaili.ir ۰۲۱-۶۶۳۴۱۴۷۱۴ ۰۹۱۲-۶۳۹۸۹۶۱ ۰۹۱۰-۷۲۴۹۰۷۴ ۰۲۱-۶۶۱۷۰۰۶۲-۵ ۰۲۱-۹۲۰۰۶۶۱۷ (ده خط)

www.electroshaili.com Electro Shaili الکتروشایلی

HDM3 Molded Case Circuit Breaker

Reference
Standard:IEC/EN 60947-2

Material order number

HDM3 Fixed front connection Power distribution protection Thermal magnetic tripping

Product Specification	In(A)	Icu(KA)	Ics(KA)	Order Reference	Order Reference	Order Reference
				Fixed front 3 pole	Fixed front 4-pole A type	Fixed front 4-pole B type
HDM3-250T	100	36	36	HDM3250T10033XX	HDM3250T100A3XX	HDM3250T100B3XX
	125	36	36	HDM3250T12533XX	HDM3250T125A3XX	HDM3250T125B3XX
	140	36	36	HDM3250T14033XX	HDM3250T140A3XX	HDM3250T140B3XX
	160	36	36	HDM3250T16033XX	HDM3250T160A3XX	HDM3250T160B3XX
	180	36	36	HDM3250T18033XX	HDM3250T180A3XX	HDM3250T180B3XX
	200	36	36	HDM3250T20033XX	HDM3250T200A3XX	HDM3250T200B3XX
	225	36	36	HDM3250T22533XX	HDM3250T225A3XX	HDM3250T225B3XX
	250	36	36	HDM3250T25033XX	HDM3250T250A3XX	HDM3250T250B3XX
HDM3-250N	100	60	36	*HDM3250N10033XX	HDM3250N100A3XX	HDM3250N100B3XX
	125	60	36	*HDM3250N12533XX	HDM3250N125A3XX	HDM3250N125B3XX
	140	60	36	*HDM3250N14033XX	HDM3250N140A3XX	HDM3250N140B3XX
	160	60	36	*HDM3250N16033XX	HDM3250N160A3XX	HDM3250N160B3XX
	180	60	36	*HDM3250N18033XX	HDM3250N180A3XX	HDM3250N180B3XX
	200	60	36	*HDM3250N20033XX	HDM3250N200A3XX	HDM3250N200B3XX
	225	60	36	*HDM3250N22533XX	HDM3250N225A3XX	HDM3250N225B3XX
	250	60	36	*HDM3250N25033XX	HDM3250N250A3XX	HDM3250N250B3XX
HDM3-400L	200	21	21	HDM3400L20033XX	HDM3400L200A3XX	HDM3400L200B3XX
	225	21	21	HDM3400L22533XX	HDM3400L225A3XX	HDM3400L225B3XX
	250	21	21	HDM3400L25033XX	HDM3400L250A3XX	HDM3400L250B3XX
	315	21	21	HDM3400L31533XX	HDM3400L315A3XX	HDM3400L315B3XX
	350	21	21	HDM3400L35033XX	HDM3400L350A3XX	HDM3400L350B3XX
	400	21	21	HDM3400L40033XX	HDM3400L400A3XX	HDM3400L400B3XX
HDM3-400S	200	35	21	HDM3400S20033XX	HDM3400S200A3XX	HDM3400S200B3XX
	225	35	21	HDM3400S22533XX	HDM3400S225A3XX	HDM3400S225B3XX
	250	35	21	HDM3400S25033XX	HDM3400S250A3XX	HDM3400S250B3XX
	315	35	21	HDM3400S31533XX	HDM3400S315A3XX	HDM3400S315B3XX
	350	35	21	HDM3400S35033XX	HDM3400S350A3XX	HDM3400S350B3XX
	400	35	21	HDM3400S40033XX	HDM3400S400A3XX	HDM3400S400B3XX
HDM3-400M	200	30	30	HDM3400M20033XX	HDM3400M200A3XX	HDM3400M200B3XX
	225	30	30	HDM3400M22533XX	HDM3400M225A3XX	HDM3400M225B3XX
	250	30	30	HDM3400M25033XX	HDM3400M250A3XX	HDM3400M250B3XX
	315	30	30	HDM3400M31533XX	HDM3400M315A3XX	HDM3400M315B3XX
	350	30	30	HDM3400M35033XX	HDM3400M350A3XX	HDM3400M350B3XX
	400	30	30	HDM3400M40033XX	HDM3400M400A3XX	HDM3400M400B3XX
HDM3-400F	200	50	30	*HDM3400F20033XX	HDM3400F200A3XX	HDM3400F200B3XX
	225	50	30	*HDM3400F22533XX	HDM3400F225A3XX	HDM3400F225B3XX
	250	50	30	*HDM3400F25033XX	HDM3400F250A3XX	HDM3400F250B3XX
	315	50	30	*HDM3400F31533XX	HDM3400F315A3XX	HDM3400F315B3XX
	350	50	30	*HDM3400F35033XX	HDM3400F350A3XX	HDM3400F350B3XX
	400	50	30	*HDM3400F40033XX	HDM3400F400A3XX	HDM3400F400B3XX

The reference with "*" means that it has 40℃ and 50℃. Please add "T" at the end as 50℃ reference.

HDM3 Molded Case Circuit Breaker

Reference
Standard:IEC/EN 60947-2

Material order number

HDM3 Fixed front connection Power distribution protection Thermal magnetic tripping

Product Specification	In(A)	Icu(KA)	Ics(KA)	Order Reference	Order Reference	Order Reference
				Fixed front 3 pole	Fixed front 4-pole A type	Fixed front 4-pole B type
HDM3-400T	200	39	39	HDM3400T20033XX	HDM3400T200A3XX	HDM3400T200B3XX
	225	39	39	HDM3400T22533XX	HDM3400T225A3XX	HDM3400T225B3XX
	250	39	39	HDM3400T25033XX	HDM3400T250A3XX	HDM3400T250B3XX
	315	39	39	HDM3400T31533XX	HDM3400T315A3XX	HDM3400T315B3XX
	350	39	39	HDM3400T35033XX	HDM3400T350A3XX	HDM3400T350B3XX
	400	39	39	HDM3400T40033XX	HDM3400T400A3XX	HDM3400T400B3XX
HDM3-400N	200	70	39	*HDM3400N20033XX	HDM3400N200A3XX	HDM3400N200B3XX
	225	70	39	*HDM3400N22533XX	HDM3400N225A3XX	HDM3400N225B3XX
	250	70	39	*HDM3400N25033XX	HDM3400N250A3XX	HDM3400N250B3XX
	315	70	39	*HDM3400N31533XX	HDM3400N315A3XX	HDM3400N315B3XX
	350	70	39	*HDM3400N35033XX	HDM3400N350A3XX	HDM3400N350B3XX
	400	70	39	*HDM3400N40033XX	HDM3400N400A3XX	HDM3400N400B3XX
HDM3-630L	400	21	21	HDM3630L40033XX	HDM3630L400A3XX	HDM3630L400B3XX
	500	21	21	HDM3630L50033XX	HDM3630L500A3XX	HDM3630L500B3XX
	630	21	21	HDM3630L63033XX	HDM3630L630A3XX	HDM3630L630B3XX
HDM3-630S	400	35	21	HDM3630S40033XX	HDM3630S400A3XX	HDM3630S400B3XX
	500	35	21	HDM3630S50033XX	HDM3630S500A3XX	HDM3630S500B3XX
	630	35	21	HDM3630S63033XX	HDM3630S630A3XX	HDM3630S630B3XX
HDM3-630M	400	30	30	HDM3630M40033XX	HDM3630M400A3XX	HDM3630M400B3XX
	500	30	30	HDM3630M50033XX	HDM3630M500A3XX	HDM3630M500B3XX
	630	30	30	HDM3630M63033XX	HDM3630M630A3XX	HDM3630M630B3XX
HDM3-630F	400	50	30	HDM3630F40033XX	HDM3630F400A3XX	HDM3630F400B3XX
	500	50	30	HDM3630F50033XX	HDM3630F500A3XX	HDM3630F500B3XX
	630	50	30	HDM3630F63033XX	HDM3630F630A3XX	HDM3630F630B3XX
HDM3-630T	400	39	39	HDM3630T40033XX	HDM3630T400A3XX	HDM3630T400B3XX
	500	39	39	HDM3630T50033XX	HDM3630T500A3XX	HDM3630T500B3XX
	630	39	39	HDM3630T63033XX	HDM3630T630A3XX	HDM3630T630B3XX
HDM3-630N	400	70	39	HDM3630N40033XX	HDM3630N400A3XX	HDM3630N400B3XX
	500	70	39	HDM3630N50033XX	HDM3630N500A3XX	HDM3630N500B3XX
	630	70	39	HDM3630N63033XX	HDM3630N630A3XX	HDM3630N630B3XX
HDM3-800L	630	25	25	HDM3800L63033XX	HDM3800L630A3XX	HDM3800L630B3XX
	700	25	25	HDM3800L70033XX	HDM3800L700A3XX	HDM3800L700B3XX
	800	25	25	HDM3800L80033XX	HDM3800L800A3XX	HDM3800L800B3XX
HDM3-800S	630	50	25	HDM3800S63033XX	HDM3800S630A3XX	HDM3800S630B3XX
	700	50	25	HDM3800S70033XX	HDM3800S700A3XX	HDM3800S700B3XX
	800	50	25	HDM3800S80033XX	HDM3800S800A3XX	HDM3800S800B3XX
HDM3-800M	630	40	40	HDM3800M63033XX	HDM3800M630A3XX	HDM3800M630B3XX
	700	40	40	HDM3800M70033XX	HDM3800M700A3XX	HDM3800M700B3XX
	800	40	40	HDM3800M80033XX	HDM3800M800A3XX	HDM3800M800B3XX
HDM3-800F	630	70	40	*HDM3800F63033XX	HDM3800F630A3XX	HDM3800F630B3XX
	700	70	40	*HDM3800F70033XX	HDM3800F700A3XX	HDM3800F700B3XX
	800	70	40	*HDM3800F80033XX	HDM3800F800A3XX	HDM3800F800B3XX
HDM3-1250N	800	85	45	HDM31250N80033XX		
	1000	85	45	HDM31250N100033XX		
	1250	85	45	HDM31250N125033XX		

The reference with "*" means that it has 40℃ and 50℃. Please add "T" at the end as 50℃ reference.

www.electroshaili.ir ۰۲۱-۶۶۳۴۱۴۷۱۴ ۰۹۱۲-۶۳۹۸۹۶۱ ۰۹۱۰-۷۲۴۹۰۷۴ ۰۲۱-۶۶۱۷۰۰۶۲-۵ ۰۲۱-۹۲۰۰۶۶۱۷ (ده خط)

www.electroshaili.com Electro Shaili الکتروشایلی

HDM3 Molded Case Circuit Breaker

Reference
Standard:IEC/EN 60947-2

Material order number

HDM3 Fixed front connection Power distribution protection Magnetic tripping

Product Specification	In(A)	Icu(KA)	Ics(KA)	Order Reference	Order Reference	Order Reference
				Fixed front 3 pole	Fixed front 4-pole A type	Fixed front 4-pole B type
HDM3-63L	10	18	18	HDM363L1032XX	HDM363L10A2XX	HDM363L10B2XX
	16	18	18	HDM363L1632XX	HDM363L16A2XX	HDM363L16B2XX
	20	18	18	HDM363L2032XX	HDM363L20A2XX	HDM363L20B2XX
	25	18	18	HDM363L2532XX	HDM363L25A2XX	HDM363L25B2XX
	32	18	18	HDM363L3232XX	HDM363L32A2XX	HDM363L32B2XX
	40	18	18	HDM363L4032XX	HDM363L40A2XX	HDM363L40B2XX
	50	18	18	HDM363L5032XX	HDM363L50A2XX	HDM363L50B2XX
	63	18	18	HDM363L6332XX	HDM363L63A2XX	HDM363L63B2XX
HDM3-63S	10	25	18	HDM363S1032XX	HDM363S10A2XX	HDM363S10B2XX
	16	25	18	HDM363S1632XX	HDM363S16A2XX	HDM363S16B2XX
	20	25	18	HDM363S2032XX	HDM363S20A2XX	HDM363S20B2XX
	25	25	18	HDM363S2532XX	HDM363S25A2XX	HDM363S25B2XX
	32	25	18	HDM363S3232XX	HDM363S32A2XX	HDM363S32B2XX
	40	25	18	HDM363S4032XX	HDM363S40A2XX	HDM363S40B2XX
	50	25	18	HDM363S5032XX	HDM363S50A2XX	HDM363S50B2XX
	63	25	18	HDM363S6332XX	HDM363S63A2XX	HDM363S63B2XX
HDM3-63M	10	30	30	HDM363M1032XX	HDM363M10A2XX	HDM363M10B2XX
	16	30	30	HDM363M1632XX	HDM363M16A2XX	HDM363M16B2XX
	20	30	30	HDM363M2032XX	HDM363M20A2XX	HDM363M20B2XX
	25	30	30	HDM363M2532XX	HDM363M25A2XX	HDM363M25B2XX
	32	30	30	HDM363M3232XX	HDM363M32A2XX	HDM363M32B2XX
	40	30	30	HDM363M4032XX	HDM363M40A2XX	HDM363M40B2XX
	50	30	30	HDM363M5032XX	HDM363M50A2XX	HDM363M50B2XX
	63	30	30	HDM363M6332XX	HDM363M63A2XX	HDM363M63B2XX
HDM3-63F	10	50	30	HDM363F1032XX	HDM363F10A2XX	HDM363F10B2XX
	16	50	30	HDM363F1632XX	HDM363F16A2XX	HDM363F16B2XX
	20	50	30	HDM363F2032XX	HDM363F20A2XX	HDM363F20B2XX
	25	50	30	HDM363F2532XX	HDM363F25A2XX	HDM363F25B2XX
	32	50	30	HDM363F3232XX	HDM363F32A2XX	HDM363F32B2XX
	40	50	30	HDM363F4032XX	HDM363F40A2XX	HDM363F40B2XX
	50	50	30	HDM363F5032XX	HDM363F50A2XX	HDM363F50B2XX
	63	50	30	HDM363F6332XX	HDM363F63A2XX	HDM363F63B2XX
HDM3-100L	10	18	18	HDM3100L1032XX	HDM3100L10A2XX	HDM3100L10B2XX
	16	18	18	HDM3100L1632XX	HDM3100L16A2XX	HDM3100L16B2XX
	20	18	18	HDM3100L2032XX	HDM3100L20A2XX	HDM3100L20B2XX
	25	18	18	HDM3100L2532XX	HDM3100L25A2XX	HDM3100L25B2XX
	32	18	18	HDM3100L3232XX	HDM3100L32A2XX	HDM3100L32B2XX
	40	18	18	HDM3100L4032XX	HDM3100L40A2XX	HDM3100L40B2XX
	50	18	18	HDM3100L5032XX	HDM3100L50A2XX	HDM3100L50B2XX
	63	18	18	HDM3100L6332XX	HDM3100L63A2XX	HDM3100L63B2XX
	80	18	18	HDM3100L8032XX	HDM3100L80A2XX	HDM3100L80B2XX
	100	18	18	HDM3100L10032XX	HDM3100L100A2XX	HDM3100L100B2XX

The reference with "*" means that it has 40℃ and 50℃. Please add "T" at the end as 50℃ reference.

HDM3 Molded Case Circuit Breaker

Reference
Standard:IEC/EN 60947-2

Material order number

HDM3 Fixed front connection Power distribution protection Magnetic tripping

Product Specification	In(A)	Icu(KA)	Ics(KA)	Order Reference	Order Reference	Order Reference
				Fixed front 3 pole	Fixed front 4-pole A type	Fixed front 4-pole B type
HDM3-100S	10	25	18	HDM3100S1032XX	HDM3100S10A2XX	HDM3100S10B2XX
	16	25	18	HDM3100S1632XX	HDM3100S16A2XX	HDM3100S16B2XX
	20	25	18	HDM3100S2032XX	HDM3100S20A2XX	HDM3100S20B2XX
	25	25	18	HDM3100S2532XX	HDM3100S25A2XX	HDM3100S25B2XX
	32	25	18	HDM3100S3232XX	HDM3100S32A2XX	HDM3100S32B2XX
	40	25	18	HDM3100S4032XX	HDM3100S40A2XX	HDM3100S40B2XX
	50	25	18	HDM3100S5032XX	HDM3100S50A2XX	HDM3100S50B2XX
	63	25	18	HDM3100S6332XX	HDM3100S63A2XX	HDM3100S63B2XX
	80	25	18	HDM3100S8032XX	HDM3100S80A2XX	HDM3100S80B2XX
	100	25	18	HDM3100S10032XX	HDM3100S100A2XX	HDM3100S100B2XX
HDM3-100M	40	26	26	HDM3100M4032XX	HDM3100M40A2XX	HDM3100M40B2XX
	50	26	26	HDM3100M5032XX	HDM3100M50A2XX	HDM3100M50B2XX
	63	26	26	HDM3100M6332XX	HDM3100M63A2XX	HDM3100M63B2XX
	80	26	26	HDM3100M8032XX	HDM3100M80A2XX	HDM3100M80B2XX
	100	26	26	HDM3100M10032XX	HDM3100M100A2XX	HDM3100M100B2XX
HDM3-100F	40	35	26	HDM3100F4032XX	HDM3100F40A2XX	HDM3100F40B2XX
	50	35	26	HDM3100F5032XX	HDM3100F50A2XX	HDM3100F50B2XX
	63	35	26	HDM3100F6332XX	HDM3100F63A2XX	HDM3100F63B2XX
	80	35	26	HDM3100F8032XX	HDM3100F80A2XX	HDM3100F80B2XX
	100	35	26	HDM3100F10032XX	HDM3100F100A2XX	HDM3100F100B2XX
HDM3-100T	40	30	30	HDM3100T4032XX	HDM3100T40A2XX	HDM3100T40B2XX
	50	30	30	HDM3100T5032XX	HDM3100T50A2XX	HDM3100T50B2XX
	63	30	30	HDM3100T6332XX	HDM3100T63A2XX	HDM3100T63B2XX
	80	30	30	HDM3100T8032XX	HDM3100T80A2XX	HDM3100T80B2XX
	100	30	30	HDM3100T10032XX	HDM3100T100A2XX	HDM3100T100B2XX
HDM3-100N	40	50	30	HDM3100N4032XX	HDM3100N40A2XX	HDM3100N40B2XX
	50	50	30	HDM3100N5032XX	HDM3100N50A2XX	HDM3100N50B2XX
	63	50	30	HDM3100N6332XX	HDM3100N63A2XX	HDM3100N63B2XX
	80	50	30	HDM3100N8032XX	HDM3100N80A2XX	HDM3100N80B2XX
	100	50	30	HDM3100N10032XX	HDM3100N100A2XX	HDM3100N100B2XX
HDM3-160L	100	21	21	HDM3160L10032XX	HDM3160L100A2XX	HDM3160L100B2XX
	125	21	21	HDM3160L12532XX	HDM3160L125A2XX	HDM3160L125B2XX
	140	21	21	HDM3160L14032XX	HDM3160L140A2XX	HDM3160L140B2XX
	160	21	21	HDM3160L16032XX	HDM3160L160A2XX	HDM3160L160B2XX
HDM3-160S	100	35	21	HDM3160S10032XX	HDM3160S100A2XX	HDM3160S100B2XX
	125	35	21	HDM3160S12532XX	HDM3160S125A2XX	HDM3160S125B2XX
	140	35	21	HDM3160S14032XX	HDM3160S140A2XX	HDM3160S140B2XX
	160	35	21	HDM3160S16032XX	HDM3160S160A2XX	HDM3160S160B2XX
HDM3-160M	100	30	30	HDM3160M16032XX	HDM3160M160A2XX	HDM3160M100B2XX
	125	30	30	HDM3160M10032XX	HDM3160M100A2XX	HDM3160M125B2XX
	140	30	30	HDM3160M12532XX	HDM3160M125A2XX	HDM3160M140B2XX
	160	30	30	HDM3160M14032XX	HDM3160M140A2XX	HDM3160M160B2XX

www.electroshaili.ir ۰۲۱-۶۶۳۴۱۴۷۱۴ ۰۹۱۲-۶۳۹۸۹۶۱ ۰۹۱۰-۷۲۴۹۰۷۴ ۰۲۱-۶۶۱۷۰۰۶۲-۵ ۰۲۱-۹۲۰۰۶۶۱۷ (ده خط)

www.electroshaili.com Electro Shaili الکتروشایلی

HDM3 Molded Case Circuit Breaker

Reference
Standard:IEC/EN 60947-2

Material order number

HDM3 Fixed front connection Power distribution protection Magnetic tripping

Product Specification	In(A)	Icu(KA)	Ics(KA)	Order Reference	Order Reference	Order Reference
				Fixed front 3 pole	Fixed front 4-pole A type	Fixed front 4-pole B type
HDM3-160F	100	50	30	HDM3160F10032XX	HDM3160F100A2XX	HDM3160F100B2XX
	125	50	30	HDM3160F12532XX	HDM3160F125A2XX	HDM3160F125B2XX
	140	50	30	HDM3160F14032XX	HDM3160F140A2XX	HDM3160F140B2XX
	160	50	30	HDM3160F16032XX	HDM3160F160A2XX	HDM3160F160B2XX
HDM3-160T	100	36	36	HDM3160T10032XX	HDM3160T100A2XX	HDM3160T100B2XX
	125	36	36	HDM3160T12532XX	HDM3160T125A2XX	HDM3160T125B2XX
	140	36	36	HDM3160T14032XX	HDM3160T140A2XX	HDM3160T140B2XX
	160	36	36	HDM3160T16032XX	HDM3160T160A2XX	HDM3160T160B2XX
HDM3-160N	100	60	36	HDM3160N12532XX	HDM3160N100A2XX	HDM3160N100B2XX
	125	60	36	HDM3160N14032XX	HDM3160N125A2XX	HDM3160N125B2XX
	140	60	36	HDM3160N16032XX	HDM3160N140A2XX	HDM3160N140B2XX
	160	60	36	HDM3160N10032XX	HDM3160N160A2XX	HDM3160N160B2XX
HDM3-250L	100	21	21	HDM3250L10032XX	HDM3250L100A2XX	HDM3250L100B2XX
	125	21	21	HDM3250L12532XX	HDM3250L125A2XX	HDM3250L125B2XX
	140	21	21	HDM3250L14032XX	HDM3250L140A2XX	HDM3250L140B2XX
	160	21	21	HDM3250L16032XX	HDM3250L160A2XX	HDM3250L160B2XX
	180	21	21	HDM3250L18032XX	HDM3250L180A2XX	HDM3250L180B2XX
	200	21	21	HDM3250L20032XX	HDM3250L200A2XX	HDM3250L200B2XX
	225	21	21	HDM3250L22532XX	HDM3250L225A2XX	HDM3250L225B2XX
	250	21	21	HDM3250L25032XX	HDM3250L250A2XX	HDM3250L250B2XX
HDM3-250S	100	35	21	HDM3250S10032XX	HDM3250S100A2XX	HDM3250S100B2XX
	125	35	21	HDM3250S12532XX	HDM3250S125A2XX	HDM3250S125B2XX
	140	35	21	HDM3250S14032XX	HDM3250S140A2XX	HDM3250S140B2XX
	160	35	21	HDM3250S16032XX	HDM3250S160A2XX	HDM3250S160B2XX
	180	35	21	HDM3250S18032XX	HDM3250S180A2XX	HDM3250S180B2XX
	200	35	21	HDM3250S20032XX	HDM3250S200A2XX	HDM3250S200B2XX
	225	35	21	HDM3250S22532XX	HDM3250S225A2XX	HDM3250S225B2XX
	250	35	21	HDM3250S25032XX	HDM3250S250A2XX	HDM3250S250B2XX
HDM3-250M	100	30	30	HDM3250M10032XX	HDM3250M100A2XX	HDM3250M100B2XX
	125	30	30	HDM3250M12532XX	HDM3250M125A2XX	HDM3250M125B2XX
	140	30	30	HDM3250M14032XX	HDM3250M140A2XX	HDM3250M140B2XX
	160	30	30	HDM3250M16032XX	HDM3250M160A2XX	HDM3250M160B2XX
	180	30	30	HDM3250M18032XX	HDM3250M180A2XX	HDM3250M180B2XX
	200	30	30	HDM3250M20032XX	HDM3250M200A2XX	HDM3250M200B2XX
	225	30	30	HDM3250M22532XX	HDM3250M225A2XX	HDM3250M225B2XX
	250	30	30	HDM3250M25032XX	HDM3250M250A2XX	HDM3250M250B2XX
HDM3-250F	100	50	30	HDM3250F10032XX	HDM3250F100A2XX	HDM3250F100B2XX
	125	50	30	HDM3250F12532XX	HDM3250F125A2XX	HDM3250F125B2XX
	140	50	30	HDM3250F14032XX	HDM3250F140A2XX	HDM3250F140B2XX
	160	50	30	HDM3250F16032XX	HDM3250F160A2XX	HDM3250F160B2XX
	180	50	30	HDM3250F18032XX	HDM3250F180A2XX	HDM3250F180B2XX
	200	50	30	HDM3250F20032XX	HDM3250F200A2XX	HDM3250F200B2XX
	225	50	30	HDM3250F22532XX	HDM3250F225A2XX	HDM3250F225B2XX
	250	50	30	HDM3250F25032XX	HDM3250F250A2XX	HDM3250F250B2XX

HDM3 Molded Case Circuit Breaker

Reference
Standard:IEC/EN 60947-2

Material order number

HDM3 Fixed front connection Power distribution protection Magnetic tripping

Product Specification	In(A)	Icu(KA)	Ics(KA)	Order Reference	Order Reference	Order Reference
				Fixed front 3 pole	Fixed front 4-pole A type	Fixed front 4-pole B type
HDM3-250T	100	36	36	HDM3250T10032XX	HDM3250T100A2XX	HDM3250T100B2XX
	125	36	36	HDM3250T12532XX	HDM3250T125A2XX	HDM3250T125B2XX
	140	36	36	HDM3250T14032XX	HDM3250T140A2XX	HDM3250T140B2XX
	160	36	36	HDM3250T16032XX	HDM3250T160A2XX	HDM3250T160B2XX
	180	36	36	HDM3250T18032XX	HDM3250T180A2XX	HDM3250T180B2XX
	200	36	36	HDM3250T20032XX	HDM3250T200A2XX	HDM3250T200B2XX
	225	36	36	HDM3250T22532XX	HDM3250T225A2XX	HDM3250T225B2XX
	250	36	36	HDM3250T25032XX	HDM3250T250A2XX	HDM3250T250B2XX
HDM3-250N	100	60	36	HDM3250N10032XX	HDM3250N100A2XX	HDM3250N100B2XX
	125	60	36	HDM3250N12532XX	HDM3250N125A2XX	HDM3250N125B2XX
	140	60	36	HDM3250N14032XX	HDM3250N140A2XX	HDM3250N140B2XX
	160	60	36	HDM3250N16032XX	HDM3250N160A2XX	HDM3250N160B2XX
	180	60	36	HDM3250N18032XX	HDM3250N180A2XX	HDM3250N180B2XX
	200	60	36	HDM3250N20032XX	HDM3250N200A2XX	HDM3250N200B2XX
	225	60	36	HDM3250N22532XX	HDM3250N225A2XX	HDM3250N225B2XX
	250	60	36	HDM3250N25032XX	HDM3250N250A2XX	HDM3250N250B2XX
HDM3-400L	200	21	21	HDM3400L20032XX	HDM3400L200A2XX	HDM3400L200B2XX
	225	21	21	HDM3400L22532XX	HDM3400L225A2XX	HDM3400L225B2XX
	250	21	21	HDM3400L25032XX	HDM3400L250A2XX	HDM3400L250B2XX
	315	21	21	HDM3400L31532XX	HDM3400L315A2XX	HDM3400L315B2XX
	350	21	21	HDM3400L35032XX	HDM3400L350A2XX	HDM3400L350B2XX
	400	21	21	HDM3400L40032XX	HDM3400L400A2XX	HDM3400L400B2XX
HDM3-400S	200	35	21	HDM3400S20032XX	HDM3400S200A2XX	HDM3400S200B2XX
	225	35	21	HDM3400S22532XX	HDM3400S225A2XX	HDM3400S225B2XX
	250	35	21	HDM3400S25032XX	HDM3400S250A2XX	HDM3400S250B2XX
	315	35	21	HDM3400S31532XX	HDM3400S315A2XX	HDM3400S315B2XX
	350	35	21	HDM3400S35032XX	HDM3400S350A2XX	HDM3400S350B2XX
	400	35	21	HDM3400S40032XX	HDM3400S400A2XX	HDM3400S400B2XX
HDM3-400M	200	30	30	HDM3400M20032XX	HDM3400M200A2XX	HDM3400M200B2XX
	225	30	30	HDM3400M22532XX	HDM3400M225A2XX	HDM3400M225B2XX
	250	30	30	HDM3400M25032XX	HDM3400M250A2XX	HDM3400M250B2XX
	315	30	30	HDM3400M31532XX	HDM3400M315A2XX	HDM3400M315B2XX
	350	30	30	HDM3400M35032XX	HDM3400M350A2XX	HDM3400M350B2XX
	400	30	30	HDM3400M40032XX	HDM3400M400A2XX	HDM3400M400B2XX
HDM3-400F	200	50	30	HDM3400F20032XX	HDM3400F200A2XX	HDM3400F200B2XX
	225	50	30	HDM3400F22532XX	HDM3400F225A2XX	HDM3400F225B2XX
	250	50	30	HDM3400F25032XX	HDM3400F250A2XX	HDM3400F250B2XX
	315	50	30	HDM3400F31532XX	HDM3400F315A2XX	HDM3400F315B2XX
	350	50	30	HDM3400F35032XX	HDM3400F350A2XX	HDM3400F350B2XX
	400	50	30	HDM3400F40032XX	HDM3400F400A2XX	HDM3400F400B2XX

www.electroshaili.ir ۰۲۱-۶۶۳۴۱۴۷۱۴ ۰۹۱۲-۶۳۹۸۹۶۱ ۰۹۱۰-۷۲۴۹۰۷۴ ۰۲۱-۶۶۱۷۰۰۶۲-۵ ۰۲۱-۹۲۰۰۶۶۱۷ (ده خط)

www.electroshaili.com Electro Shaili الکتروشایلی

HDM3 Molded Case Circuit Breaker

Reference
Standard:IEC/EN 60947-2

Material order number

HDM3 Fixed front connection Power distribution protection Magnetic tripping

Product Specification	In(A)	Icu(KA)	Ics(KA)	Order Reference	Order Reference	Order Reference
				Fixed front 3 pole	Fixed front 4-pole A type	Fixed front 4-pole B type
HDM3-400T	200	39	39	HDM3400T20032XX	HDM3400T200A2XX	HDM3400T200B2XX
	225	39	39	HDM3400T22532XX	HDM3400T225A2XX	HDM3400T225B2XX
	250	39	39	HDM3400T25032XX	HDM3400T250A2XX	HDM3400T250B2XX
	315	39	39	HDM3400T31532XX	HDM3400T315A2XX	HDM3400T315B2XX
	350	39	39	HDM3400T35032XX	HDM3400T350A2XX	HDM3400T350B2XX
	400	39	39	HDM3400T40032XX	HDM3400T400A2XX	HDM3400T400B2XX
HDM3-400N	200	70	39	HDM3400N20032XX	HDM3400N200A2XX	HDM3400N200B2XX
	225	70	39	HDM3400N22532XX	HDM3400N225A2XX	HDM3400N225B2XX
	250	70	39	HDM3400N25032XX	HDM3400N250A2XX	HDM3400N250B2XX
	315	70	39	HDM3400N31532XX	HDM3400N315A2XX	HDM3400N315B2XX
	350	70	39	HDM3400N35032XX	HDM3400N350A2XX	HDM3400N350B2XX
	400	70	39	HDM3400N40032XX	HDM3400N400A2XX	HDM3400N400B2XX
HDM3-630L	400	21	21	HDM3630L40032XX	HDM3630L400A2XX	HDM3630L400B2XX
	500	21	21	HDM3630L50032XX	HDM3630L500A2XX	HDM3630L500B2XX
	630	21	21	HDM3630L63032XX	HDM3630L630A2XX	HDM3630L630B2XX
HDM3-630S	400	35	21	HDM3630S40032XX	HDM3630S400A2XX	HDM3630S400B2XX
	500	35	21	HDM3630S50032XX	HDM3630S500A2XX	HDM3630S500B2XX
	630	35	21	HDM3630S63032XX	HDM3630S630A2XX	HDM3630S630B2XX
HDM3-630M	400	30	30	HDM3630M40032XX	HDM3630M400A2XX	HDM3630M400B2XX
	500	30	30	HDM3630M50032XX	HDM3630M500A2XX	HDM3630M500B2XX
	630	30	30	HDM3630M63032XX	HDM3630M630A2XX	HDM3630M630B2XX
HDM3-630F	400	50	30	HDM3630F40032XX	HDM3630F400A2XX	HDM3630F400B2XX
	500	50	30	HDM3630F50032XX	HDM3630F500A2XX	HDM3630F500B2XX
	630	50	30	HDM3630F63032XX	HDM3630F630A2XX	HDM3630F630B2XX
HDM3-630T	400	39	39	HDM3630T40032XX	HDM3630T400A2XX	HDM3630T400B2XX
	500	39	39	HDM3630T50032XX	HDM3630T500A2XX	HDM3630T500B2XX
	630	39	39	HDM3630T63032XX	HDM3630T630A2XX	HDM3630T630B2XX
HDM3-630N	400	70	39	HDM3630N40032XX	HDM3630N400A2XX	HDM3630N400B2XX
	500	70	39	HDM3630N50032XX	HDM3630N500A2XX	HDM3630N500B2XX
	630	70	39	HDM3630N63032XX	HDM3630N630A2XX	HDM3630N630B2XX
HDM3-800L	630	25	25	HDM3800L63032XX	HDM3800L630A2XX	HDM3800L630B2XX
	700	25	25	HDM3800L70032XX	HDM3800L700A2XX	HDM3800L700B2XX
	800	25	25	HDM3800L80032XX	HDM3800L800A2XX	HDM3800L800B2XX
HDM3-800S	630	50	25	HDM3800S63032XX	HDM3800S630A2XX	HDM3800S630B2XX
	700	50	25	HDM3800S70032XX	HDM3800S700A2XX	HDM3800S700B2XX
	800	50	25	HDM3800S80032XX	HDM3800S800A2XX	HDM3800S800B2XX
HDM3-800M	630	40	40	HDM3800M63032XX	HDM3800M630A2XX	HDM3800M630B2XX
	700	40	40	HDM3800M70032XX	HDM3800M700A2XX	HDM3800M700B2XX
	800	40	40	HDM3800M80032XX	HDM3800M800A2XX	HDM3800M800B2XX
HDM3-800F	630	70	40	HDM3800F63032XX	HDM3800F630A2XX	HDM3800F630B2XX
	700	70	40	HDM3800F70032XX	HDM3800F700A2XX	HDM3800F700B2XX
	800	70	40	HDM3800F80032XX	HDM3800F800A2XX	HDM3800F800B2XX
HDM3-1250N	800	85	45	HDM31250N80032XX		
	1000	85	45	HDM31250N100032XX		
	1250	85	45	HDM31250N125032XX		

HDM3 Molded Case Circuit Breaker

Reference
Standard:IEC/EN 60947-2

Material order number

HDM3 Fixed front connection Motor protection Thermal tripping

Product Specification	In(A)	Icu(KA)	Ics(KA)	Order Reference	Order Reference	Order Reference
				Fixed front 3 pole	Fixed front 4-pole A type	Fixed front 4-pole B type
HDM3-63L	10	18	18	HDM363L1032XX2	HDM363L10A2XX2	HDM363L10B2XX2
	16	18	18	HDM363L1632XX2	HDM363L16A2XX2	HDM363L16B2XX2
	20	18	18	HDM363L2032XX2	HDM363L20A2XX2	HDM363L20B2XX2
	25	18	18	HDM363L2532XX2	HDM363L25A2XX2	HDM363L25B2XX2
	32	18	18	HDM363L3232XX2	HDM363L32A2XX2	HDM363L32B2XX2
	40	18	18	HDM363L4032XX2	HDM363L40A2XX2	HDM363L40B2XX2
	50	18	18	HDM363L5032XX2	HDM363L50A2XX2	HDM363L50B2XX2
	63	18	18	HDM363L6332XX2	HDM363L63A2XX2	HDM363L63B2XX2
HDM3-63S	10	25	18	HDM363S1032XX2	HDM363S10A2XX2	HDM363S10B2XX2
	16	25	18	HDM363S1632XX2	HDM363S16A2XX2	HDM363S16B2XX2
	20	25	18	HDM363S2032XX2	HDM363S20A2XX2	HDM363S20B2XX2
	25	25	18	HDM363S2532XX2	HDM363S25A2XX2	HDM363S25B2XX2
	32	25	18	HDM363S3232XX2	HDM363S32A2XX2	HDM363S32B2XX2
	40	25	18	HDM363S4032XX2	HDM363S40A2XX2	HDM363S40B2XX2
	50	25	18	HDM363S5032XX2	HDM363S50A2XX2	HDM363S50B2XX2
	63	25	18	HDM363S6332XX2	HDM363S63A2XX2	HDM363S63B2XX2
HDM3-63M	10	30	30	HDM363M1032XX2	HDM363M10A2XX2	HDM363M10B2XX2
	16	30	30	HDM363M1632XX2	HDM363M16A2XX2	HDM363M16B2XX2
	20	30	30	HDM363M2032XX2	HDM363M20A2XX2	HDM363M20B2XX2
	25	30	30	HDM363M2532XX2	HDM363M25A2XX2	HDM363M25B2XX2
	32	30	30	HDM363M3232XX2	HDM363M32A2XX2	HDM363M32B2XX2
	40	30	30	HDM363M4032XX2	HDM363M40A2XX2	HDM363M40B2XX2
	50	30	30	HDM363M5032XX2	HDM363M50A2XX2	HDM363M50B2XX2
	63	30	30	HDM363M6332XX2	HDM363M63A2XX2	HDM363M63B2XX2
HDM3-63F	10	50	30	HDM363F1032XX2	HDM363F10A2XX2	HDM363F10B2XX2
	16	50	30	HDM363F1632XX2	HDM363F16A2XX2	HDM363F16B2XX2
	20	50	30	HDM363F2032XX2	HDM363F20A2XX2	HDM363F20B2XX2
	25	50	30	HDM363F2532XX2	HDM363F25A2XX2	HDM363F25B2XX2
	32	50	30	HDM363F3232XX2	HDM363F32A2XX2	HDM363F32B2XX2
	40	50	30	HDM363F4032XX2	HDM363F40A2XX2	HDM363F40B2XX2
	50	50	30	HDM363F5032XX2	HDM363F50A2XX2	HDM363F50B2XX2
	63	50	30	HDM363F6332XX2	HDM363F63A2XX2	HDM363F63B2XX2
HDM3-100L	10	18	18	HDM3100L1032XX2	HDM3100L10A2XX2	HDM3100L10B2XX2
	16	18	18	HDM3100L1632XX2	HDM3100L16A2XX2	HDM3100L16B2XX2
	20	18	18	HDM3100L2032XX2	HDM3100L20A2XX2	HDM3100L20B2XX2
	25	18	18	HDM3100L2532XX2	HDM3100L25A2XX2	HDM3100L25B2XX2
	32	18	18	HDM3100L3232XX2	HDM3100L32A2XX2	HDM3100L32B2XX2
	40	18	18	HDM3100L4032XX2	HDM3100L40A2XX2	HDM3100L40B2XX2
	50	18	18	HDM3100L5032XX2	HDM3100L50A2XX2	HDM3100L50B2XX2
	63	18	18	HDM3100L6332XX2	HDM3100L63A2XX2	HDM3100L63B2XX2
	80	18	18	HDM3100L8032XX2	HDM3100L80A2XX2	HDM3100L80B2XX2

www.electroshaili.ir ۰۲۱-۶۶۳۴۱۴۷۱۴ ۰۹۱۲-۶۳۹۸۹۶۱ ۰۹۱۰-۷۲۴۹۰۷۴ ۰۲۱-۶۶۱۷۰۰۶۲-۵ ۰۲۱-۹۲۰۰۶۶۱۷ (ده خط)

www.electroshaili.com Electro Shaili الکتروشایلی

HDM3 Molded Case Circuit Breaker

Reference
Standard:IEC/EN 60947-2

Material order number

HDM3 Fixed front connection Motor protection Thermal tripping

Product Specification	In(A)	Icu(KA)	Ics(KA)	Order Reference	Order Reference	Order Reference
				Fixed front 3 pole	Fixed front 4-pole A type	Fixed front 4-pole B type
HDM3-100S	10	18	18	HDM3100S1032XX2	HDM3100S10A2XX2	HDM3100S10B2XX2
	16	18	18	HDM3100S1632XX2	HDM3100S16A2XX2	HDM3100S16B2XX2
	20	18	18	HDM3100S2032XX2	HDM3100S20A2XX2	HDM3100S20B2XX2
	25	18	18	HDM3100S2532XX2	HDM3100S25A2XX2	HDM3100S25B2XX2
	32	18	18	HDM3100S3232XX2	HDM3100S32A2XX2	HDM3100S32B2XX2
	40	18	18	HDM3100S4032XX2	HDM3100S40A2XX2	HDM3100S40B2XX2
	50	18	18	HDM3100S5032XX2	HDM3100S50A2XX2	HDM3100S50B2XX2
	63	18	18	HDM3100S6332XX2	HDM3100S63A2XX2	HDM3100S63B2XX2
	80	18	18	HDM3100S8032XX2	HDM3100S80A2XX2	HDM3100S80B2XX2
	100	18	18	HDM3100S10032XX2	HDM3100S100A2XX2	HDM3100S100B2XX2
HDM3-100M	40	26	26	HDM3100M4032XX2	HDM3100M40A2XX2	HDM3100M40B2XX2
	50	26	26	HDM3100M5032XX2	HDM3100M50A2XX2	HDM3100M50B2XX2
	63	26	26	HDM3100M6332XX2	HDM3100M63A2XX2	HDM3100M63B2XX2
	80	26	26	HDM3100M8032XX2	HDM3100M80A2XX2	HDM3100M80B2XX2
	100	26	26	HDM3100M10032XX2	HDM3100M100A2XX2	HDM3100M100B2XX2
HDM3-100F	40	35	26	HDM3100F4032XX2	HDM3100F40A2XX2	HDM3100F40B2XX2
	50	35	26	HDM3100F5032XX2	HDM3100F50A2XX2	HDM3100F50B2XX2
	63	35	26	HDM3100F6332XX2	HDM3100F63A2XX2	HDM3100F63B2XX2
	80	35	26	HDM3100F8032XX2	HDM3100F80A2XX2	HDM3100F80B2XX2
	100	35	26	HDM3100F10032XX2	HDM3100F100A2XX2	HDM3100F100B2XX2
HDM3-100T	40	30	30	HDM3100T4032XX2	HDM3100T40A2XX2	HDM3100T40B2XX2
	50	30	30	HDM3100T5032XX2	HDM3100T50A2XX2	HDM3100T50B2XX2
	63	30	30	HDM3100T6332XX2	HDM3100T63A2XX2	HDM3100T63B2XX2
	80	30	30	HDM3100T8032XX2	HDM3100T80A2XX2	HDM3100T80B2XX2
	100	30	30	HDM3100T10032XX2	HDM3100T100A2XX2	HDM3100T100B2XX2
HDM3-100N	40	50	30	HDM3100N4032XX2	HDM3100N40A2XX2	HDM3100N40B2XX2
	50	50	30	HDM3100N5032XX2	HDM3100N50A2XX2	HDM3100N50B2XX2
	63	50	30	HDM3100N6332XX2	HDM3100N63A2XX2	HDM3100N63B2XX2
	80	50	30	HDM3100N8032XX2	HDM3100N80A2XX2	HDM3100N80B2XX2
	100	50	30	HDM3100N10032XX2	HDM3100N100A2XX2	HDM3100N100B2XX2
HDM3-160L	100	21	21	HDM3160L10032XX2	HDM3160L100A2XX2	HDM3160L100B2XX2
	125	21	21	HDM3160L12532XX2	HDM3160L125A2XX2	HDM3160L125B2XX2
	140	21	21	HDM3160L14032XX2	HDM3160L140A2XX2	HDM3160L140B2XX2
	160	21	21	HDM3160L16032XX2	HDM3160L160A2XX2	HDM3160L160B2XX2
HDM3-160S	100	35	21	HDM3160S10032XX2	HDM3160S100A2XX2	HDM3160S100B2XX2
	125	35	21	HDM3160S12532XX2	HDM3160S125A2XX2	HDM3160S125B2XX2
	140	35	21	HDM3160S14032XX2	HDM3160S140A2XX2	HDM3160S140B2XX2
	160	35	21	HDM3160S16032XX2	HDM3160S160A2XX2	HDM3160S160B2XX2
HDM3-160M	100	30	30	HDM3160M10032XX2	HDM3160M100A2XX2	HDM3160M100B2XX2
	125	30	30	HDM3160M12532XX2	HDM3160M125A2XX2	HDM3160M125B2XX2
	140	30	30	HDM3160M14032XX2	HDM3160M140A2XX2	HDM3160M140B2XX2
	160	30	30	HDM3160M16032XX2	HDM3160M160A2XX2	HDM3160M160B2XX2

HDM3 Molded Case Circuit Breaker

Reference
Standard:IEC/EN 60947-2

Material order number

HDM3 Fixed front connection Motor protection Thermal tripping

Product Specification	In(A)	Icu(KA)	Ics(KA)	Order Reference	Order Reference	Order Reference
				Fixed front 3 pole	Fixed front 4-pole A type	Fixed front 4-pole B type
HDM3-160F	100	50	30	HDM3160F10032XX2	HDM3160F100A2XX2	HDM3160F100B2XX2
	125	50	30	HDM3160F12532XX2	HDM3160F125A2XX2	HDM3160F125B2XX2
	140	50	30	HDM3160F14032XX2	HDM3160F140A2XX2	HDM3160F140B2XX2
	160	50	30	HDM3160F16032XX2	HDM3160F160A2XX2	HDM3160F160B2XX2
HDM3-160T	100	36	36	HDM3160T10032XX2	HDM3160T100A2XX2	HDM3160T100B2XX2
	125	36	36	HDM3160T12532XX2	HDM3160T125A2XX2	HDM3160T125B2XX2
	140	36	36	HDM3160T14032XX2	HDM3160T140A2XX2	HDM3160T140B2XX2
	160	36	36	HDM3160T16032XX2	HDM3160T160A2XX2	HDM3160T160B2XX2
HDM3-160N	100	60	36	HDM3160N10032XX2	HDM3160N100A2XX2	HDM3160N100B2XX2
	125	60	36	HDM3160N12532XX2	HDM3160N125A2XX2	HDM3160N125B2XX2
	140	60	36	HDM3160N14032XX2	HDM3160N140A2XX2	HDM3160N140B2XX2
	160	60	36	HDM3160N16032XX2	HDM3160N160A2XX2	HDM3160N160B2XX2
HDM3-250L	100	21	21	HDM3250L10032XX2	HDM3250L100A2XX2	HDM3250L100B2XX2
	125	21	21	HDM3250L12532XX2	HDM3250L125A2XX2	HDM3250L125B2XX2
	140	21	21	HDM3250L14032XX2	HDM3250L140A2XX2	HDM3250L140B2XX2
	160	21	21	HDM3250L16032XX2	HDM3250L160A2XX2	HDM3250L160B2XX2
	180	21	21	HDM3250L18032XX2	HDM3250L180A2XX2	HDM3250L180B2XX2
	200	21	21	HDM3250L20032XX2	HDM3250L200A2XX2	HDM3250L200B2XX2
	225	21	21	HDM3250L22532XX2	HDM3250L225A2XX2	HDM3250L225B2XX2
	250	21	21	HDM3250L25032XX2	HDM3250L250A2XX2	HDM3250L250B2XX2
HDM3-250S	100	35	21	HDM3250S10032XX2	HDM3250S100A2XX2	HDM3250S100B2XX2
	125	35	21	HDM3250S12532XX2	HDM3250S125A2XX2	HDM3250S125B2XX2
	140	35	21	HDM3250S14032XX2	HDM3250S140A2XX2	HDM3250S140B2XX2
	160	35	21	HDM3250S16032XX2	HDM3250S160A2XX2	HDM3250S160B2XX2
	180	35	21	HDM3250S18032XX2	HDM3250S180A2XX2	HDM3250S180B2XX2
	200	35	21	HDM3250S20032XX2	HDM3250S200A2XX2	HDM3250S200B2XX2
	225	35	21	HDM3250S22532XX2	HDM3250S225A2XX2	HDM3250S225B2XX2
	250	35	21	HDM3250S25032XX2	HDM3250S250A2XX2	HDM3250S250B2XX2
HDM3-250M	100	30	30	HDM3250M10032XX2	HDM3250M100A2XX2	HDM3250M100B2XX2
	125	30	30	HDM3250M12532XX2	HDM3250M125A2XX2	HDM3250M125B2XX2
	140	30	30	HDM3250M14032XX2	HDM3250M140A2XX2	HDM3250M140B2XX2
	160	30	30	HDM3250M16032XX2	HDM3250M160A2XX2	HDM3250M160B2XX2
	180	30	30	HDM3250M18032XX2	HDM3250M180A2XX2	HDM3250M180B2XX2
	200	30	30	HDM3250M20032XX2	HDM3250M200A2XX2	HDM3250M200B2XX2
	225	30	30	HDM3250M22532XX2	HDM3250M225A2XX2	HDM3250M225B2XX2
	250	30	30	HDM3250M25032XX2	HDM3250M250A2XX2	HDM3250M250B2XX2
HDM3-250F	100	50	30	HDM3250F10032XX2	HDM3250F100A2XX2	HDM3250F100B2XX2
	125	50	30	HDM3250F12532XX2	HDM3250F125A2XX2	HDM3250F125B2XX2
	140	50	30	HDM3250F14032XX2	HDM3250F140A2XX2	HDM3250F140B2XX2
	160	50	30	HDM3250F16032XX2	HDM3250F160A2XX2	HDM3250F160B2XX2
	180	50	30	HDM3250F18032XX2	HDM3250F180A2XX2	HDM3250F180B2XX2
	200	50	30	HDM3250F20032XX2	HDM3250F200A2XX2	HDM3250F200B2XX2
	225	50	30	HDM3250F22532XX2	HDM3250F225A2XX2	HDM3250F225B2XX2
	250	50	30	HDM3250F25032XX2	HDM3250F250A2XX2	HDM3250F250B2XX2

www.electroshaili.ir ۰۲۱-۶۶۳۴۱۴۷۱۴ ۰۹۱۲-۶۳۹۸۹۶۱ ۰۹۱۰-۷۲۴۹۰۷۴ ۰۲۱-۶۶۱۷۰۰۶۲-۵ ۰۲۱-۹۲۰۰۶۶۱۷ (ده خط)

www.electroshaili.com Electro Shaili الکتروشایلی

HDM3 Molded Case Circuit Breaker

Reference
Standard:IEC/EN 60947-2

Material order number

HDM3 Fixed front connection Motor protection Thermal tripping

Product Specification	In(A)	Icu(KA)	Ics(KA)	Order Reference	Order Reference	Order Reference
				Fixed front 3 pole	Fixed front 4-pole A type	Fixed front 4-pole B type
HDM3-250T	100	36	36	HDM3250T10032XX2	HDM3250T100A2XX2	HDM3250T100B2XX2
	125	36	36	HDM3250T12532XX2	HDM3250T125A2XX2	HDM3250T125B2XX2
	140	36	36	HDM3250T14032XX2	HDM3250T140A2XX2	HDM3250T140B2XX2
	160	36	36	HDM3250T16032XX2	HDM3250T160A2XX2	HDM3250T160B2XX2
	180	36	36	HDM3250T18032XX2	HDM3250T180A2XX2	HDM3250T180B2XX2
	200	36	36	HDM3250T20032XX2	HDM3250T200A2XX2	HDM3250T200B2XX2
	225	36	36	HDM3250T22532XX2	HDM3250T225A2XX2	HDM3250T225B2XX2
	250	36	36	HDM3250T25032XX2	HDM3250T250A2XX2	HDM3250T250B2XX2
HDM3-250N	100	60	36	HDM3250N10032XX2	HDM3250N100A2XX2	HDM3250N100B2XX2
	125	60	36	HDM3250N12532XX2	HDM3250N125A2XX2	HDM3250N125B2XX2
	140	60	36	HDM3250N14032XX2	HDM3250N140A2XX2	HDM3250N140B2XX2
	160	60	36	HDM3250N16032XX2	HDM3250N160A2XX2	HDM3250N160B2XX2
	180	60	36	HDM3250N18032XX2	HDM3250N180A2XX2	HDM3250N180B2XX2
	200	60	36	HDM3250N20032XX2	HDM3250N200A2XX2	HDM3250N200B2XX2
	225	60	36	HDM3250N22532XX2	HDM3250N225A2XX2	HDM3250N225B2XX2
	250	60	36	HDM3250N25032XX2	HDM3250N250A2XX2	HDM3250N250B2XX2
HDM3-400L	200	21	21	HDM3400L20032XX2	HDM3400L200A2XX2	HDM3400L200B2XX2
	225	21	21	HDM3400L22532XX2	HDM3400L225A2XX2	HDM3400L225B2XX2
	250	21	21	HDM3400L25032XX2	HDM3400L250A2XX2	HDM3400L250B2XX2
	315	21	21	HDM3400L31532XX2	HDM3400L315A2XX2	HDM3400L315B2XX2
	350	21	21	HDM3400L35032XX2	HDM3400L350A2XX2	HDM3400L350B2XX2
	400	21	21	HDM3400L40032XX2	HDM3400L400A2XX2	HDM3400L400B2XX2
HDM3-400S	200	35	21	HDM3400S20032XX2	HDM3400S200A2XX2	HDM3400S200B2XX2
	225	35	21	HDM3400S22532XX2	HDM3400S225A2XX2	HDM3400S225B2XX2
	250	35	21	HDM3400S25032XX2	HDM3400S250A2XX2	HDM3400S250B2XX2
	315	35	21	HDM3400S31532XX2	HDM3400S315A2XX2	HDM3400S315B2XX2
	350	35	21	HDM3400S35032XX2	HDM3400S350A2XX2	HDM3400S350B2XX2
	400	35	21	HDM3400S40032XX2	HDM3400S400A2XX2	HDM3400S400B2XX2
HDM3-400M	200	30	30	HDM3400M20032XX2	HDM3400M200A2XX2	HDM3400M200B2XX2
	225	30	30	HDM3400M22532XX2	HDM3400M225A2XX2	HDM3400M225B2XX2
	250	30	30	HDM3400M25032XX2	HDM3400M250A2XX2	HDM3400M250B2XX2
	315	30	30	HDM3400M31532XX2	HDM3400M315A2XX2	HDM3400M315B2XX2
	350	30	30	HDM3400M35032XX2	HDM3400M350A2XX2	HDM3400M350B2XX2
	400	30	30	HDM3400M40032XX2	HDM3400M400A2XX2	HDM3400M400B2XX2
HDM3-400F	200	50	30	HDM3400F20032XX2	HDM3400F200A2XX2	HDM3400F200B2XX2
	225	50	30	HDM3400F22532XX2	HDM3400F225A2XX2	HDM3400F225B2XX2
	250	50	30	HDM3400F25032XX2	HDM3400F250A2XX2	HDM3400F250B2XX2
	315	50	30	HDM3400F31532XX2	HDM3400F315A2XX2	HDM3400F315B2XX2
	350	50	30	HDM3400F35032XX2	HDM3400F350A2XX2	HDM3400F350B2XX2
	400	50	30	HDM3400F40032XX2	HDM3400F400A2XX2	HDM3400F400B2XX2

HDM3 Molded Case Circuit Breaker

Reference
Standard:IEC/EN 60947-2

Material order number

HDM3 Fixed front connection Motor protection Thermal tripping

Product Specification	In(A)	Icu(KA)	Ics(KA)	Order Reference	Order Reference	Order Reference
				Fixed front 3 pole	Fixed front 4-pole A type	Fixed front 4-pole B type
HDM3-400T	200	39	39	HDM3400T20032XX2	HDM3400T200A2XX2	HDM3400T200B2XX2
	225	39	39	HDM3400T22532XX2	HDM3400T225A2XX2	HDM3400T225B2XX2
	250	39	39	HDM3400T25032XX2	HDM3400T250A2XX2	HDM3400T250B2XX2
	315	39	39	HDM3400T31532XX2	HDM3400T315A2XX2	HDM3400T315B2XX2
	350	39	39	HDM3400T35032XX2	HDM3400T350A2XX2	HDM3400T350B2XX2
	400	39	39	HDM3400T40032XX2	HDM3400T400A2XX2	HDM3400T400B2XX2
HDM3-400N	200	70	39	HDM3400N20032XX2	HDM3400N200A2XX2	HDM3400N200B2XX2
	225	70	39	HDM3400N22532XX2	HDM3400N225A2XX2	HDM3400N225B2XX2
	250	70	39	HDM3400N25032XX2	HDM3400N250A2XX2	HDM3400N250B2XX2
	315	70	39	HDM3400N31532XX2	HDM3400N315A2XX2	HDM3400N315B2XX2
	350	70	39	HDM3400N35032XX2	HDM3400N350A2XX2	HDM3400N350B2XX2
	400	70	39	HDM3400N40032XX2	HDM3400N400A2XX2	HDM3400N400B2XX2
HDM3-630L	400	21	21	HDM3630L40032XX2	HDM3630L400A2XX2	HDM3630L400B2XX2
	500	21	21	HDM3630L50032XX2	HDM3630L500A2XX2	HDM3630L500B2XX2
	630	21	21	HDM3630L63032XX2	HDM3630L630A2XX2	HDM3630L630B2XX2
HDM3-630S	400	35	21	HDM3630S40032XX2	HDM3630S400A2XX2	HDM3630S400B2XX2
	500	35	21	HDM3630S50032XX2	HDM3630S500A2XX2	HDM3630S500B2XX2
	630	35	21	HDM3630S63032XX2	HDM3630S630A2XX2	HDM3630S630B2XX2
HDM3-630M	400	30	30	HDM3630M40032XX2	HDM3630M400A2XX2	HDM3630M400B2XX2
	500	30	30	HDM3630M50032XX2	HDM3630M500A2XX2	HDM3630M500B2XX2
	630	30	30	HDM3630M63032XX2	HDM3630M630A2XX2	HDM3630M630B2XX2
HDM3-630F	400	50	30	HDM3630F40032XX2	HDM3630F400A2XX2	HDM3630F400B2XX2
	500	50	30	HDM3630F50032XX2	HDM3630F500A2XX2	HDM3630F500B2XX2
	630	50	30	HDM3630F63032XX2	HDM3630F630A2XX2	HDM3630F630B2XX2
HDM3-630T	400	39	39	HDM3630T40032XX2	HDM3630T400A2XX2	HDM3630T400B2XX2
	500	39	39	HDM3630T50032XX2	HDM3630T500A2XX2	HDM3630T500B2XX2
	630	39	39	HDM3630T63032XX2	HDM3630T630A2XX2	HDM3630T630B2XX2
HDM3-630N	400	70	39	HDM3630N40032XX2	HDM3630N400A2XX2	HDM3630N400B2XX2
	500	70	39	HDM3630N50032XX2	HDM3630N500A2XX2	HDM3630N500B2XX2
	630	70	39	HDM3630N63032XX2	HDM3630N630A2XX2	HDM3630N630B2XX2

Low-voltage Distribution

www.electroshaili.ir ۰۲۱-۶۶۳۴۱۴۷۱۴ ۰۹۱۲-۶۳۹۸۹۶۱ ۰۹۱۰-۷۲۴۹۰۷۴ ۰۲۱-۶۶۱۷۰۰۶۲-۵ ۰۲۱-۹۲۰۰۶۶۱۷ (ده خط)

www.electroshaili.com Electro Shaili الکتروشایلی

HDM3 Molded Case Circuit Breaker

Reference
Standard:IEC/EN 60947-2

Material order number

HDM3 Fixed front connection Motor protection Thermal magnetic tripping

Product Specification	In(A)	Icu(KA)	Ics(KA)	Order Reference	Order Reference	Order Reference
				Fixed front 3 pole	Fixed front 4-pole A type	Fixed front 4-pole B type
HDM3-63L	10	18	18	HDM363L1033XX2	HDM363L10A3XX2	HDM363L10B3XX2
	16	18	18	HDM363L1633XX2	HDM363L16A3XX2	HDM363L16B3XX2
	20	18	18	HDM363L2033XX2	HDM363L20A3XX2	HDM363L20B3XX2
	25	18	18	HDM363L2533XX2	HDM363L25A3XX2	HDM363L25B3XX2
	32	18	18	HDM363L3233XX2	HDM363L32A3XX2	HDM363L32B3XX2
	40	18	18	HDM363L4033XX2	HDM363L40A3XX2	HDM363L40B3XX2
	50	18	18	HDM363L5033XX2	HDM363L50A3XX2	HDM363L50B3XX2
	63	18	18	HDM363L6333XX2	HDM363L63A3XX2	HDM363L63B3XX2
HDM3-63S	10	25	18	HDM363S1033XX2	HDM363S10A3XX2	HDM363S10B3XX2
	16	25	18	HDM363S1633XX2	HDM363S16A3XX2	HDM363S16B3XX2
	20	25	18	HDM363S2033XX2	HDM363S20A3XX2	HDM363S20B3XX2
	25	25	18	HDM363S2533XX2	HDM363S25A3XX2	HDM363S25B3XX2
	32	25	18	HDM363S3233XX2	HDM363S32A3XX2	HDM363S32B3XX2
	40	25	18	HDM363S4033XX2	HDM363S40A3XX2	HDM363S40B3XX2
	50	25	18	HDM363S5033XX2	HDM363S50A3XX2	HDM363S50B3XX2
	63	25	18	HDM363S6333XX2	HDM363S63A3XX2	HDM363S63B3XX2
HDM3-63M	10	30	30	HDM363M1033XX2	HDM363M10A3XX2	HDM363M10B3XX2
	16	30	30	HDM363M1633XX2	HDM363M16A3XX2	HDM363M16B3XX2
	20	30	30	HDM363M2033XX2	HDM363M20A3XX2	HDM363M20B3XX2
	25	30	30	HDM363M2533XX2	HDM363M25A3XX2	HDM363M25B3XX2
	32	30	30	HDM363M3233XX2	HDM363M32A3XX2	HDM363M32B3XX2
	40	30	30	HDM363M4033XX2	HDM363M40A3XX2	HDM363M40B3XX2
	50	30	30	HDM363M5033XX2	HDM363M50A3XX2	HDM363M50B3XX2
	63	30	30	HDM363M6333XX2	HDM363M63A3XX2	HDM363M63B3XX2
HDM3-63F	10	50	30	HDM363F1033XX2	HDM363F10A3XX2	HDM363F10B3XX2
	16	50	30	HDM363F1633XX2	HDM363F16A3XX2	HDM363F16B3XX2
	20	50	30	HDM363F2033XX2	HDM363F20A3XX2	HDM363F20B3XX2
	25	50	30	HDM363F2533XX2	HDM363F25A3XX2	HDM363F25B3XX2
	32	50	30	HDM363F3233XX2	HDM363F32A3XX2	HDM363F32B3XX2
	40	50	30	HDM363F4033XX2	HDM363F40A3XX2	HDM363F40B3XX2
	50	50	30	HDM363F5033XX2	HDM363F50A3XX2	HDM363F50B3XX2
	63	50	30	HDM363F6333XX2	HDM363F63A3XX2	HDM363F63B3XX2
HDM3-100L	10	18	18	HDM3100L1033XX2	HDM3100L10A3XX2	HDM3100L10B3XX2
	16	18	18	HDM3100L1633XX2	HDM3100L16A3XX2	HDM3100L16B3XX2
	20	18	18	HDM3100L2033XX2	HDM3100L20A3XX2	HDM3100L20B3XX2
	25	18	18	HDM3100L2533XX2	HDM3100L25A3XX2	HDM3100L25B3XX2
	32	18	18	HDM3100L3233XX2	HDM3100L32A3XX2	HDM3100L32B3XX2
	40	18	18	HDM3100L4033XX2	HDM3100L40A3XX2	HDM3100L40B3XX2
	50	18	18	HDM3100L5033XX2	HDM3100L50A3XX2	HDM3100L50B3XX2
	63	18	18	HDM3100L6333XX2	HDM3100L63A3XX2	HDM3100L63B3XX2
	80	18	18	HDM3100L8033XX2	HDM3100L80A3XX2	HDM3100L80B3XX2
	100	18	18	HDM3100L10033XX2	HDM3100L100A3XX2	HDM3100L100B3XX2

HDM3 Molded Case Circuit Breaker

Reference
Standard:IEC/EN 60947-2

Material order number

HDM3 Fixed front connection Motor protection Thermal magnetic tripping

Product Specification	In(A)	Icu(KA)	Ics(KA)	Order Reference	Order Reference	Order Reference
				Fixed front 3 pole	Fixed front 4-pole A type	Fixed front 4-pole B type
HDM3-100S	10	25	18	HDM3100S1033XX2	HDM3100S10A3XX2	HDM3100S10B3XX2
	16	25	18	HDM3100S1633XX2	HDM3100S16A3XX2	HDM3100S16B3XX2
	20	25	18	HDM3100S2033XX2	HDM3100S20A3XX2	HDM3100S20B3XX2
	25	25	18	HDM3100S2533XX2	HDM3100S25A3XX2	HDM3100S25B3XX2
	32	25	18	HDM3100S3233XX2	HDM3100S32A3XX2	HDM3100S32B3XX2
	40	25	18	HDM3100S4033XX2	HDM3100S40A3XX2	HDM3100S40B3XX2
	50	25	18	HDM3100S5033XX2	HDM3100S50A3XX2	HDM3100S50B3XX2
	63	25	18	HDM3100S6333XX2	HDM3100S63A3XX2	HDM3100S63B3XX2
	80	25	18	HDM3100S8033XX2	HDM3100S80A3XX2	HDM3100S80B3XX2
	100	25	18	HDM3100S10033XX2	HDM3100S100A3XX2	HDM3100S100B3XX2
HDM3-100M	40	26	26	HDM3100M4033XX2	HDM3100M40A3XX2	HDM3100M40B3XX2
	50	26	26	HDM3100M5033XX2	HDM3100M50A3XX2	HDM3100M50B3XX2
	63	26	26	HDM3100M6333XX2	HDM3100M63A3XX2	HDM3100M63B3XX2
	80	26	26	HDM3100M8033XX2	HDM3100M80A3XX2	HDM3100M80B3XX2
	100	26	26	HDM3100M10033XX2	HDM3100M100A3XX2	HDM3100M100B3XX2
HDM3-100F	40	35	26	HDM3100F4033XX2	HDM3100F40A3XX2	HDM3100F40B3XX2
	50	35	26	HDM3100F5033XX2	HDM3100F50A3XX2	HDM3100F50B3XX2
	63	35	26	HDM3100F6333XX2	HDM3100F63A3XX2	HDM3100F63B3XX2
	80	35	26	HDM3100F8033XX2	HDM3100F80A3XX2	HDM3100F80B3XX2
	100	35	26	HDM3100F10033XX2	HDM3100F100A3XX2	HDM3100F100B3XX2
HDM3-100T	40	30	30	HDM3100T4033XX2	HDM3100T40A3XX2	HDM3100T40B3XX2
	50	30	30	HDM3100T5033XX2	HDM3100T50A3XX2	HDM3100T50B3XX2
	63	30	30	HDM3100T6333XX2	HDM3100T63A3XX2	HDM3100T63B3XX2
	80	30	30	HDM3100T8033XX2	HDM3100T80A3XX2	HDM3100T80B3XX2
	100	30	30	HDM3100T10033XX2	HDM3100T100A3XX2	HDM3100T100B3XX2
HDM3-100N	40	50	30	HDM3100N4033XX2	HDM3100N40A3XX2	HDM3100N40B3XX2
	50	50	30	HDM3100N5033XX2	HDM3100N50A3XX2	HDM3100N50B3XX2
	63	50	30	HDM3100N6333XX2	HDM3100N63A3XX2	HDM3100N63B3XX2
	80	50	30	HDM3100N8033XX2	HDM3100N80A3XX2	HDM3100N80B3XX2
	100	50	30	HDM3100N10033XX2	HDM3100N100A3XX2	HDM3100N100B3XX2
HDM3-160L	100	21	21	HDM3160L10033XX2	HDM3160L100A3XX2	HDM3160L100B3XX2
	125	21	21	HDM3160L12533XX2	HDM3160L125A3XX2	HDM3160L125B3XX2
	140	21	21	HDM3160L14033XX2	HDM3160L140A3XX2	HDM3160L140B3XX2
	160	21	21	HDM3160L16033XX2	HDM3160L160A3XX2	HDM3160L160B3XX2
HDM3-160S	100	35	21	HDM3160S10033XX2	HDM3160S100A3XX2	HDM3160S100B3XX2
	125	35	21	HDM3160S12533XX2	HDM3160S125A3XX2	HDM3160S125B3XX2
	140	35	21	HDM3160S14033XX2	HDM3160S140A3XX2	HDM3160S140B3XX2
	160	35	21	HDM3160S16033XX2	HDM3160S160A3XX2	HDM3160S160B3XX2
HDM3-160M	100	30	30	HDM3160M10033XX2	HDM3160M100A3XX2	HDM3160M100B3XX2
	125	30	30	HDM3160M12533XX2	HDM3160M125A3XX2	HDM3160M125B3XX2
	140	30	30	HDM3160M14033XX2	HDM3160M140A3XX2	HDM3160M140B3XX2
	160	30	30	HDM3160M16033XX2	HDM3160M160A3XX2	HDM3160M160B3XX2

www.electroshaili.ir ۰۲۱-۶۶۳۴۱۴۷۱۴ ۰۹۱۲-۶۳۹۸۹۶۱ ۰۹۱۰-۷۲۴۹۰۷۴ ۰۲۱-۶۶۱۷۰۰۶۲-۵ ۰۲۱-۹۲۰۰۶۶۱۷ (ده خط)

www.electroshaili.com Electro Shaili الکتروشایلی

HDM3 Molded Case Circuit Breaker

Reference
Standard:IEC/EN 60947-2

Material order number

HDM3 Fixed front connection Motor protection Thermal magnetic tripping

Product Specification	In(A)	Icu(KA)	Ics(KA)	Order Reference	Order Reference	Order Reference
				Fixed front 3 pole	Fixed front 4-pole A type	Fixed front 4-pole B type
HDM3-160F	100	50	30	HDM3160F10033XX2	HDM3160F100A3XX2	HDM3160F100B3XX2
	125	50	30	HDM3160F12533XX2	HDM3160F125A3XX2	HDM3160F125B3XX2
	140	50	30	HDM3160F14033XX2	HDM3160F140A3XX2	HDM3160F140B3XX2
	160	50	30	HDM3160F16033XX2	HDM3160F160A3XX2	HDM3160F160B3XX2
HDM3-160T	100	36	36	HDM3160T10033XX2	HDM3160T100A3XX2	HDM3160T100B3XX2
	125	36	36	HDM3160T12533XX2	HDM3160T125A3XX2	HDM3160T125B3XX2
	140	36	36	HDM3160T14033XX2	HDM3160T140A3XX2	HDM3160T140B3XX2
	160	36	36	HDM3160T16033XX2	HDM3160T160A3XX2	HDM3160T160B3XX2
HDM3-160N	100	60	36	HDM3160N10033XX2	HDM3160N100A3XX2	HDM3160N100B3XX2
	125	60	36	HDM3160N12533XX2	HDM3160N125A3XX2	HDM3160N125B3XX2
	140	60	36	HDM3160N14033XX2	HDM3160N140A3XX2	HDM3160N140B3XX2
	160	60	36	HDM3160N16033XX2	HDM3160N160A3XX2	HDM3160N160B3XX2
HDM3-250L	100	21	21	HDM3250L10033XX2	HDM3250L100A3XX2	HDM3250L100B3XX2
	125	21	21	HDM3250L12533XX2	HDM3250L125A3XX2	HDM3250L125B3XX2
	140	21	21	HDM3250L14033XX2	HDM3250L140A3XX2	HDM3250L140B3XX2
	160	21	21	HDM3250L16033XX2	HDM3250L160A3XX2	HDM3250L160B3XX2
	180	21	21	HDM3250L18033XX2	HDM3250L180A3XX2	HDM3250L180B3XX2
	200	21	21	HDM3250L20033XX2	HDM3250L200A3XX2	HDM3250L200B3XX2
	225	21	21	HDM3250L22533XX2	HDM3250L225A3XX2	HDM3250L225B3XX2
	250	21	21	HDM3250L25033XX2	HDM3250L250A3XX2	HDM3250L250B3XX2
HDM3-250S	100	35	21	HDM3250S10033XX2	HDM3250S100A3XX2	HDM3250S100B3XX2
	125	35	21	HDM3250S12533XX2	HDM3250S125A3XX2	HDM3250S125B3XX2
	140	35	21	HDM3250S14033XX2	HDM3250S140A3XX2	HDM3250S140B3XX2
	160	35	21	HDM3250S16033XX2	HDM3250S160A3XX2	HDM3250S160B3XX2
	180	35	21	HDM3250S18033XX2	HDM3250S180A3XX2	HDM3250S180B3XX2
	200	35	21	HDM3250S20033XX2	HDM3250S200A3XX2	HDM3250S200B3XX2
	225	35	21	HDM3250S22533XX2	HDM3250S225A3XX2	HDM3250S225B3XX2
	250	35	21	HDM3250S25033XX2	HDM3250S250A3XX2	HDM3250S250B3XX2
HDM3-250M	100	30	30	HDM3250M10033XX2	HDM3250M100A3XX2	HDM3250M100B3XX2
	125	30	30	HDM3250M12533XX2	HDM3250M125A3XX2	HDM3250M125B3XX2
	140	30	30	HDM3250M14033XX2	HDM3250M140A3XX2	HDM3250M140B3XX2
	160	30	30	HDM3250M16033XX2	HDM3250M160A3XX2	HDM3250M160B3XX2
	180	30	30	HDM3250M18033XX2	HDM3250M180A3XX2	HDM3250M180B3XX2
	200	30	30	HDM3250M20033XX2	HDM3250M200A3XX2	HDM3250M200B3XX2
	225	30	30	HDM3250M22533XX2	HDM3250M225A3XX2	HDM3250M225B3XX2
	250	30	30	HDM3250M25033XX2	HDM3250M250A3XX2	HDM3250M250B3XX2
HDM3-250F	100	50	30	HDM3250F10033XX2	HDM3250F100A3XX2	HDM3250F100B3XX2
	125	50	30	HDM3250F12533XX2	HDM3250F125A3XX2	HDM3250F125B3XX2
	140	50	30	HDM3250F14033XX2	HDM3250F140A3XX2	HDM3250F140B3XX2
	160	50	30	HDM3250F16033XX2	HDM3250F160A3XX2	HDM3250F160B3XX2
	180	50	30	HDM3250F18033XX2	HDM3250F180A3XX2	HDM3250F180B3XX2
	200	50	30	HDM3250F20033XX2	HDM3250F200A3XX2	HDM3250F200B3XX2
	225	50	30	HDM3250F22533XX2	HDM3250F225A3XX2	HDM3250F225B3XX2
	250	50	30	HDM3250F25033XX2	HDM3250F250A3XX2	HDM3250F250B3XX2

HDM3 Molded Case Circuit Breaker

Reference
Standard:IEC/EN 60947-2

Material order number

HDM3 Fixed front connection Motor protection Thermal magnetic tripping

Product Specification	In(A)	Icu(KA)	Ics(KA)	Order Reference	Order Reference	Order Reference
				Fixed front 3 pole	Fixed front 4-pole A type	Fixed front 4-pole B type
HDM3-250T	100	36	36	HDM3250T10033XX2	HDM3250T100A3XX2	HDM3250T100B3XX2
	125	36	36	HDM3250T12533XX2	HDM3250T125A3XX2	HDM3250T125B3XX2
	140	36	36	HDM3250T14033XX2	HDM3250T140A3XX2	HDM3250T140B3XX2
	160	36	36	HDM3250T16033XX2	HDM3250T160A3XX2	HDM3250T160B3XX2
	180	36	36	HDM3250T18033XX2	HDM3250T180A3XX2	HDM3250T180B3XX2
	200	36	36	HDM3250T20033XX2	HDM3250T200A3XX2	HDM3250T200B3XX2
	225	36	36	HDM3250T22533XX2	HDM3250T225A3XX2	HDM3250T225B3XX2
	250	36	36	HDM3250T25033XX2	HDM3250T250A3XX2	HDM3250T250B3XX2
HDM3-250N	100	60	36	HDM3250N10033XX2	HDM3250N100A3XX2	HDM3250N100B3XX2
	125	60	36	HDM3250N12533XX2	HDM3250N125A3XX2	HDM3250N125B3XX2
	140	60	36	HDM3250N14033XX2	HDM3250N140A3XX2	HDM3250N140B3XX2
	160	60	36	HDM3250N16033XX2	HDM3250N160A3XX2	HDM3250N160B3XX2
	180	60	36	HDM3250N18033XX2	HDM3250N180A3XX2	HDM3250N180B3XX2
	200	60	36	HDM3250N20033XX2	HDM3250N200A3XX2	HDM3250N200B3XX2
	225	60	36	HDM3250N22533XX2	HDM3250N225A3XX2	HDM3250N225B3XX2
	250	60	36	HDM3250N25033XX2	HDM3250N250A3XX2	HDM3250N250B3XX2
HDM3-400L	200	21	21	HDM3400L20033XX2	HDM3400L200A3XX2	HDM3400L200B3XX2
	225	21	21	HDM3400L22533XX2	HDM3400L225A3XX2	HDM3400L225B3XX2
	250	21	21	HDM3400L25033XX2	HDM3400L250A3XX2	HDM3400L250B3XX2
	315	21	21	HDM3400L31533XX2	HDM3400L315A3XX2	HDM3400L315B3XX2
	350	21	21	HDM3400L35033XX2	HDM3400L350A3XX2	HDM3400L350B3XX2
	400	21	21	HDM3400L40033XX2	HDM3400L400A3XX2	HDM3400L400B3XX2
HDM3-400S	200	35	21	HDM3400S20033XX2	HDM3400S200A3XX2	HDM3400S200B3XX2
	225	35	21	HDM3400S22533XX2	HDM3400S225A3XX2	HDM3400S225B3XX2
	250	35	21	HDM3400S25033XX2	HDM3400S250A3XX2	HDM3400S250B3XX2
	315	35	21	HDM3400S31533XX2	HDM3400S315A3XX2	HDM3400S315B3XX2
	350	35	21	HDM3400S35033XX2	HDM3400S350A3XX2	HDM3400S350B3XX2
	400	35	21	HDM3400S40033XX2	HDM3400S400A3XX2	HDM3400S400B3XX2
HDM3-400M	200	30	30	HDM3400M20033XX2	HDM3400M200A3XX2	HDM3400M200B3XX2
	225	30	30	HDM3400M22533XX2	HDM3400M225A3XX2	HDM3400M225B3XX2
	250	30	30	HDM3400M25033XX2	HDM3400M250A3XX2	HDM3400M250B3XX2
	315	30	30	HDM3400M31533XX2	HDM3400M315A3XX2	HDM3400M315B3XX2
	350	30	30	HDM3400M35033XX2	HDM3400M350A3XX2	HDM3400M350B3XX2
	400	30	30	HDM3400M40033XX2	HDM3400M400A3XX2	HDM3400M400B3XX2
HDM3-400F	200	50	30	HDM3400F20033XX2	HDM3400F200A3XX2	HDM3400F200B3XX2
	225	50	30	HDM3400F22533XX2	HDM3400F225A3XX2	HDM3400F225B3XX2
	250	50	30	HDM3400F25033XX2	HDM3400F250A3XX2	HDM3400F250B3XX2
	315	50	30	HDM3400F31533XX2	HDM3400F315A3XX2	HDM3400F315B3XX2
	350	50	30	HDM3400F35033XX2	HDM3400F350A3XX2	HDM3400F350B3XX2
	400	50	30	HDM3400F40033XX2	HDM3400F400A3XX2	HDM3400F400B3XX2

www.electroshaili.ir ۰۲۱-۶۶۳۴۱۴۷۱۴ ۰۹۱۲-۶۳۹۸۹۶۱ ۰۹۱۰-۷۲۴۹۰۷۴ ۰۲۱-۶۶۱۷۰۰۶۲-۵ ۰۲۱-۹۲۰۰۶۶۱۷ (ده خط)

www.electroshaili.com Electro Shaili الکتروشایلی

HDM3 Molded Case Circuit Breaker

Reference
Standard:IEC/EN 60947-2

Material order number

HDM3 Fixed front connection Motor protection Thermal magnetic tripping

Product Specification	In(A)	Icu(KA)	Ics(KA)	Order Reference	Order Reference	Order Reference
				Fixed front 3 pole	Fixed front 4-pole A type	Fixed front 4-pole B type
HDM3-400T	200	39	39	HDM3400T20033XX2	HDM3400T200A3XX2	HDM3400T200B3XX2
	225	39	39	HDM3400T22533XX2	HDM3400T225A3XX2	HDM3400T225B3XX2
	250	39	39	HDM3400T25033XX2	HDM3400T250A3XX2	HDM3400T250B3XX2
	315	39	39	HDM3400T31533XX2	HDM3400T315A3XX2	HDM3400T315B3XX2
	350	39	39	HDM3400T35033XX2	HDM3400T350A3XX2	HDM3400T350B3XX2
	400	39	39	HDM3400T40033XX2	HDM3400T400A3XX2	HDM3400T400B3XX2
HDM3-400N	200	70	39	HDM3400N20033XX2	HDM3400N200A3XX2	HDM3400N200B3XX2
	225	70	39	HDM3400N22533XX2	HDM3400N225A3XX2	HDM3400N225B3XX2
	250	70	39	HDM3400N25033XX2	HDM3400N250A3XX2	HDM3400N250B3XX2
	315	70	39	HDM3400N31533XX2	HDM3400N315A3XX2	HDM3400N315B3XX2
	350	70	39	HDM3400N35033XX2	HDM3400N350A3XX2	HDM3400N350B3XX2
	400	70	39	HDM3400N40033XX2	HDM3400N400A3XX2	HDM3400N400B3XX2
HDM3-630L	400	21	21	HDM3630L40033XX2	HDM3630L400A3XX2	HDM3630L400B3XX2
	500	21	21	HDM3630L50033XX2	HDM3630L500A3XX2	HDM3630L500B3XX2
	630	21	21	HDM3630L63033XX2	HDM3630L630A3XX2	HDM3630L630B3XX2
HDM3-630S	400	35	21	HDM3630S40033XX2	HDM3630S400A3XX2	HDM3630S400B3XX2
	500	35	21	HDM3630S50033XX2	HDM3630S500A3XX2	HDM3630S500B3XX2
	630	35	21	HDM3630S63033XX2	HDM3630S630A3XX2	HDM3630S630B3XX2
HDM3-630M	400	30	30	HDM3630M40033XX2	HDM3630M400A3XX2	HDM3630M400B3XX2
	500	30	30	HDM3630M50033XX2	HDM3630M500A3XX2	HDM3630M500B3XX2
	630	30	30	HDM3630M63033XX2	HDM3630M630A3XX2	HDM3630M630B3XX2
HDM3-630F	400	50	30	HDM3630F40033XX2	HDM3630F400A3XX2	HDM3630F400B3XX2
	500	50	30	HDM3630F50033XX2	HDM3630F500A3XX2	HDM3630F500B3XX2
	630	50	30	HDM3630F63033XX2	HDM3630F630A3XX2	HDM3630F630B3XX2
HDM3-630T	400	39	39	HDM3630T40033XX2	HDM3630T400A3XX2	HDM3630T400B3XX2
	500	39	39	HDM3630T50033XX2	HDM3630T500A3XX2	HDM3630T500B3XX2
	630	39	39	HDM3630T63033XX2	HDM3630T630A3XX2	HDM3630T630B3XX2
HDM3-630N	400	70	39	HDM3630N40033XX2	HDM3630N400A3XX2	HDM3630N400B3XX2
	500	70	39	HDM3630N50033XX2	HDM3630N500A3XX2	HDM3630N500B3XX2
	630	70	39	HDM3630N63033XX2	HDM3630N630A3XX2	HDM3630N630B3XX2

HDM2 Molded Case Circuit Breaker

Coding system & Order References
Standard: IEC/EN 60947-2

Coding System

Product	Framesize	Breaking Capacity	Rated Current	Poles
HDM2	100	L	16	1
	↓	↓	↓	↓
	100:100AF	L: Icu=25kA/Ics=18kA	10: 10A 16: 16A ... 100: 100A	1P:1P 2P:2P

Order References

Product specification	In(A)	Order Reference
HDM2 1P 	10	HDM2100L0101
	16	HDM2100L0161
	20	HDM2100L0201
	25	HDM2100L0251
	32	HDM2100L0321
	40	HDM2100L0401
	50	HDM2100L0501
	63	HDM2100L0631
	80	HDM2100L0801
	100	HDM2100L1001
HDM2 2P 	10	HDM2100L0102
	16	HDM2100L0162
	20	HDM2100L0202
	25	HDM2100L0252
	32	HDM2100L0322
	40	HDM2100L0402
	50	HDM2100L0502
	63	HDM2100L0632
	80	HDM2100L0802
	100	HDM2100L1002

www.electroshaili.ir ۰۲۱-۶۶۳۴۱۴۷۱۴ ۰۹۱۲-۶۳۹۸۹۶۱ ۰۹۱۰-۷۲۴۹۰۷۴ ۰۲۱-۶۶۱۷۰۰۶۲-۵ ۰۲۱-۹۲۰۰۶۶۱۷ (ده خط)

www.electroshaili.com Electro Shaili الکتروشایلی

HDM2 Molded Case Circuit Breaker

Technical parameters
Standard: IEC/EN 60947-2

CE

Technical Parameters

Shell Frame Current		HDM2-100
Standard		IEC60947-2
Rated Voltage Ue(V)		1P: 240VAC; 2P: 400/415VAC
Rated Frequency (Hz)		50/60Hz
Rated Insulation Voltage Ui(V)		690V
Rated Impulse Withstand Voltage Uimp(kV)		8kV
Rated Current In(A)		10A, 16A, 20A, 25A, 32A, 40A, 50A, 63A, 80A, 100A
Number of Poles		1P/2P
Pollution Degree		3
Installation Category		II
Usage Category		A
Ambient Temperature		-5℃ ~+50℃
Altitude		≤ 2000m
Humidity		The atmospheric relative humidity does not exceed 50% when the maximum ambient temperature is +50℃ . It is allowed to have relative higher humidity under lower temperature, e.g. up to 90% for +20℃ .
Protection Degree		IP30
Rated ultimate short circuit breaking capacity(Icu/cos φ)		25kA/0.25
Rated operating short circuit breaking capacity(Ics/cos φ)		18kA/0.25
Mechanical Life	With Maintenance	20000
	Without Maintenance	8000
Electrical life	AC 400/415V	2000
Isolation function		Available
Certification		CE
W*H*D	1P (mm)	25*130*94
	2P (mm)	50*130*94

HDM2 Molded Case Circuit Breaker
Technical parameters
Standard: IEC/EN 60947-2

CE

De-rating table for application at higher ambient temperature

Model \ Temperature	0℃	10℃	20℃	25℃	30℃	35℃	40℃	45℃	50℃	55℃	60℃	65℃
HDM2-1P	1.21	1.19	1.1	1.16	1.12	1.1	1.08	1.03	1	0.95	0.86	0.81
HDM2-2P	1.21	1.19	1.1	1.16	1.12	1.1	1.08	1.03	1	0.95	0.86	0.81

De-rating table for application at higher altitude

Altitude(m)	2000	3000	4000	5000
Rated Voltage(V)	415	350	310	270
De-rated rated current at ambient temperature of 50℃	1In	0.94In	0.88In	0.83In
Rated Insulation Voltage Ui(V)	800	700	600	500
Power frequency voltage (V)	3000	2500	2000	1800

Installing and Operation

- Before installation:
  （1）Check whether the parameters on nameplate comply with the application requirement;
  （2）Make sure the handle at the "Trip" position;
  （3）Open and close the circuit breakers 3 times, and the operation should be reliable and no clamping, and the handle should be at "OFF" position;
- When installing:
  （1）Check whether the wire connection is correct, and connect “LINE” to power supply, and “LOAD” to equipments.
  （2）Refer to below table 1 for recommended wiring cross section and related rated current, to make sure the breaker work properly;
  （3）Refer to table 2 for wiring fastening torque;

Rated current and related wiring cross section

Rated current A	16, 20	25	32	40, 50	63	80	100
Cross section of wire mm^2	2.5	4	6	10	16	25	35

Fastening torque

Model	Screw	Fastening torque N·m
100AF	M8	9.5-10.5

www.electroshaili.ir ۰۲۱-۶۶۳۴۱۴۷۱۴ ۰۹۱۲-۶۳۹۸۹۶۱ ۰۹۱۰-۷۲۴۹۰۷۴ ۰۲۱-۶۶۱۷۰۰۶۲-۵ ۰۲۱-۹۲۰۰۶۶۱۷ (ده خط)

www.electroshaili.com Electro Shaili الکتروشایلی

HDM2 Molded Case Circuit Breaker

Technical parameters
Standard: IEC/EN 60947-2

Handle Position Indication

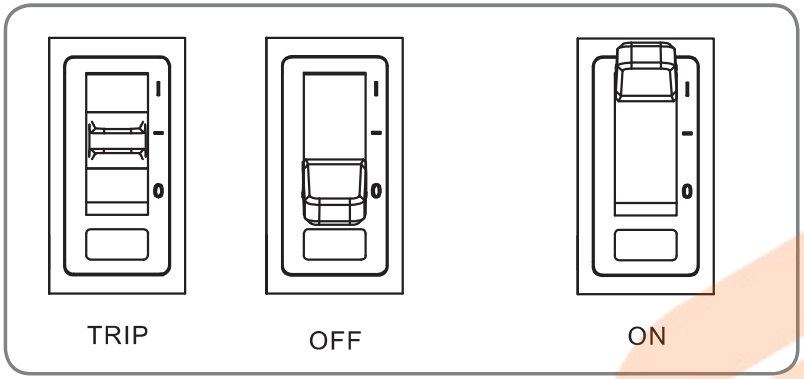

HDM2 Series Trip Curve

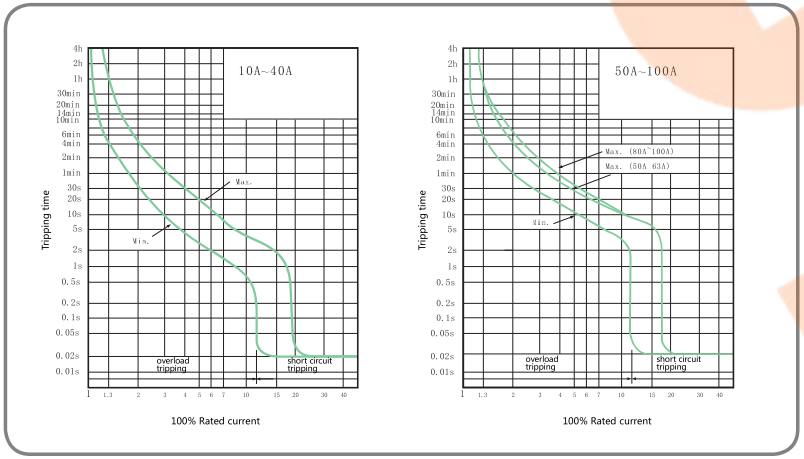

HDM2 Molded Case Circuit Breaker

Dimensions and Installing size
Standard: IEC/EN 60947-2

Dimensions

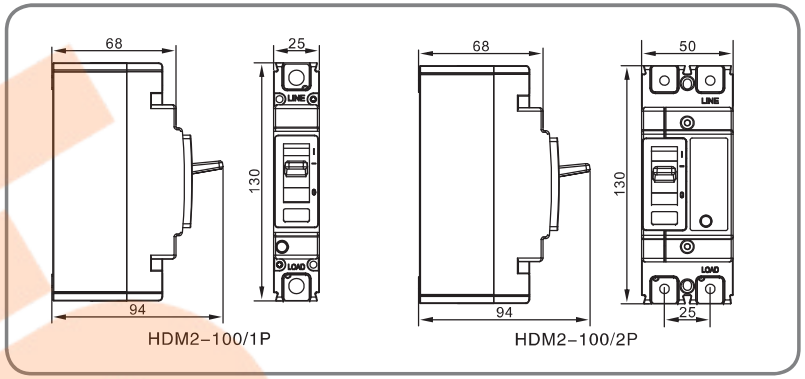

Installation Size

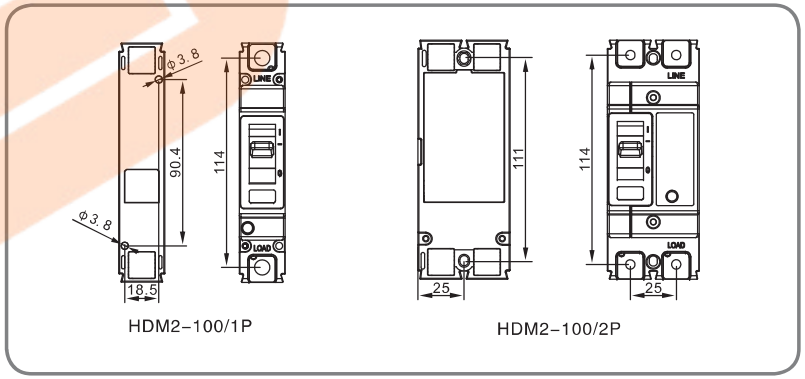

www.electroshaili.ir ۰۲۱-۶۶۳۴۱۴۷۱۴ ۰۹۱۲-۶۳۹۸۹۶۱ ۰۹۱۰-۷۲۴۹۰۷۴ ۰۲۱-۶۶۱۷۰۰۶۲-۵ ۰۲۱-۹۲۰۰۶۶۱۷ (ده خط)

www.electroshaili.com Electro Shaili الکتروشایلی

HDM2 Molded Case Circuit Breaker

Maintenance and Care
Standard: IEC/EN 60947-2

Maintenance and Care

• The maintenance and care must be implemented by qualified professional persons;
• Make sure that the breaker is electrically neutral;
• Conduct maintenance and care once a year under normal operation condition.
See below table for maintenance content.

Type	Item	Content
Circuit Breaker	Appearance	Free of dust or condensation. Clean if there is any. Free of damage. No discoloration at the shell or connecting terminal.
	Terminal Connection	Not loose and tighten according to the torque specified in table 2
	Interphase barrier	Should be inserted tightly, and no damage
	Handle closing and opening	Operation shall be flexible
	Insulation test	Prohibited to test insulation between any two load phases by short circuit
	Test button	The handle should be at trip position after tripping
Circuit breaker with accessories (If applicable)	Installed with undervoltage release	The breaker shall open reliably when cut off the power supply of undervoltage release, and the handle should be at TRIP position
	Installed with shunt release	The breaker shall open reliably when energizing the shunt release with rated voltage, and the handle should be at TRIP position
	Installed with auxiliary contacts	Open and close the breaker, the auxiliary contacts shall transfer signal reliably.

HDM6s Molded Case Circuit Breaker

Standard: IEC/EN 60947-2

Molded Case Circuit Breaker



HDM6s

Frame Current	63A,100A,250A,400A,630A,800A
Rated Insulation Voltage Ui	AC 800V (Frame 63AF:AC 690V)
Rated Impulse Withstand Voltage Uimp	8kV (Frame 63AF:6kV)
Rated Operational Voltage Ue	AC 400/415 (Frame 63AF:AC 400V)
Poles	3P, 4P
Rated Frequency	50/60Hz
Standard	IEC 60947-2
Certificate	

Name	Frame size	B.C.	Rated current	Pole	Accessory	Voltage of Accessory	Breaking Capacity &Installation
HDM6s	100	L	100	3	10	1	F
	↓	↓	↓	↓	↓	↓	↓
	063:63AF 100:100AF 250:250AF 400:400AF 630:630AF 800:800AF	L:L type S:S type M:M type T:T type	010:10A 800:800A	3:3P 4:4P	XX:No Accessory 10:MX 20:OF 30:MN (exclude 63M 4P) 40:MX+OF 50:MX+MN (exclude 63M 4P) 60:OF+OF 70:MN+OF (exclude 63M 4P) 08:SD 18:MX+SD 28:OF+SD 38:MN+SD (exclude 63M 4P) 48:MX+OF+SD 68:SD+OF+OF 78:MN+OF+SD (exclude 63M 4P) 98:MCH+SD+MN+OF	X:AC400V (MX,MN) or No Accessory N:AC230V (MX,MN) D:DC220V (MX) 1:MX AC400V MN AC230V 2:MX AC230V MN AC400V 3:MX DC220V MN AC400V 4:MX DC220V MN AC230V	F: 40℃ Unadjustable Fixed Front 3: 40℃ Adjustable Fixed Front

www.electroshaili.ir ۰۲۱-۶۶۳۴۱۴۷۱۴ ۰۹۱۲-۶۳۹۸۹۶۱ ۰۹۱۰-۷۲۴۹۰۷۴ ۰۲۱-۶۶۱۷۰۰۶۲-۵ ۰۲۱-۹۲۰۰۶۶۱۷ (ده خط)